MIAMI-DADE

MIAMI-DADE COUNTY, FLORIDA
METRO-DADE FLAGLER BUILDING

BUILDING CODE COMPLIANCE OFFICE
METRO-DADE FLAGLER BUILDING
140 WEST FLAGLER STREET, SUITE 1603
MIAMI, FLORIDA 33130-1563
(305) 375-2901 FAX (305) 375-2908

CONTRACTOR LICENSING SECTION
(305) 375-2527 FAX (305) 375-2558

CONTRACTOR ENFORCEMENT DIVISION
(305) 375-2966 FAX (305) 375-2908

PRODUCT CONTROL DIVISION
(305) 375-2902 FAX (305) 372-6339

PRODUCT CONTROL NOTICE OF ACCEPTANCE

Caradco Windows & Doors
201 Evans Road
Rantoul ,IL 61866

Your application for Notice of Acceptance (NOA) of:
"Carclad" Aluminum Clad Wood Fixed Window - Impact
under Chapter 8 of the Code of Miami-Dade County governing the use of Alternate Materials and Types of Construction, and completely described herein, has been recommended for acceptance by the Miami-Dade County Building Code Compliance Office (BCCO) under the conditions specified herein.

This NOA shall not be valid after the expiration date stated below. BCCO reserves the right to secure this product or material at any time from a jobsite or manufacturer's plant for quality control testing. If this product or material fails to perform in the approved manner, BCCO may revoke, modify, or suspend the use of such product or material immediately. BCCO reserves the right to revoke this approval, if it is determined by BCCO that this product or material fails to meet the requirements of the South Florida Building Code.

The expense of such testing will be incurred by the manufacturer.

ACCEPTANCE NO.: 01-0814.01
EXPIRES: 07/31/2006

Raul Rodriguez
Chief Product Control Division

THIS IS THE COVERSHEET, SEE ADDITIONAL PAGES FOR SPECIFIC AND GENERAL CONDITIONS
BUILDING CODE & PRODUCT REVIEW COMMITTEE

This application for Product Approval has been reviewed by the BCCO and approved by the Building Code and Product Review Committee to be used in Miami-Dade County, Florida under the conditions set forth above.

Francisco J. Quintana, R.A.
Director
Miami-Dade County
Building Code Compliance Office

APPROVED: 11/29/2001

NOTICE OF ACCEPTANCE: SPECIFIC CONDITIONS

1. SCOPE

1.1 This **revises** and **renews** Notice of Acceptance (NOA) No. **98-1216.03**, which was issued on April 1, 1999. It revises and renews the approval of an aluminum clad wood fixed window, as described in Section 2 of this NOA, designed to comply with the South Florida Building Code (SFBC), 1994 Edition for Miami-Dade County, for the locations where the pressure requirements, as determined by SFBC Chapter 23, do not exceed the Design Pressure Rating values indicated in the approved drawings.

2. PRODUCT DESCRIPTION

2.1 The **Series "Car Clad" Aluminum Clad Wood Fixed Window** and its components shall be constructed in strict compliance with the following document: Drawing No **W98-90**, Sheets 1 through 5 of 5, titled ""Car Clad" Wood Fixed Window," prepared by Al Farooq Corporation, dated 11/2/98 and revised on 7/25/01, signed sealed by Humayoun Farooq, P.E., bearing the Miami-Dade County Product Control approval stamp with the NOA number and approval date by the Miami-Dade County Product Control Division. This document shall hereinafter be referred to as the approved drawings.

3. LIMITATIONS

3.1 This approval applies to single unit applications, side-by-side and top-and-bottom installations, as shown in approved drawings.

4. INSTALLATION

4.1 The aluminum clad wood fixed window and its components shall be installed in strict compliance with the approved drawings.

4.2 Hurricane protection system (shutters): to determine whether the installation requires a hurricane protection system or not, see corresponding "Design Load Capacity" table in approved drawing.

5. LABELING

5.1 Each unit shall bear a permanent label with the manufacturer's name or logo, city, state and following statement: "Miami-Dade County Product Control Approved".

6. BUILDING PERMIT REQUIREMENTS

6.1 Application for building permit shall be accompanied by copies of the following:

6.1.1 This Notice of Acceptance

6.1.2 Duplicate copies of the approved drawings, as identified in Section 2 of this Notice of Acceptance, clearly marked to show the components selected for the proposed installation.

6.1.3 Any other documents required by the Building Official or the South Florida Building Code (SFBC) in order to properly evaluate the installation of this system.

Raul Rodriguez, Chief
Product Control Division

Caradco **ACCEPTANCE No.: 01-0814.01**

APPROVED: November 29, 2001

EXPIRES: July 31, 2006

NOTICE OF ACCEPTANCE: STANDARD CONDITIONS

1. Renewal of this Acceptance (approval) shall be considered after a renewal application has been filed and the original submitted documentation, including test supporting data, engineering documents, are no older than eight (8) years.

2. Any and all approved products shall be permanently labeled with the manufacturer's name, city, state, and the following statement: "Miami-Dade County Product Control Approved", or as specifically stated in the specific conditions of this Acceptance.

3. Renewals of Acceptance will not be considered if:
   a) There has been a change in the South Florida Building Code affecting the evaluation of this product and the product is not in compliance with the code changes;
   b) The product is no longer the same product (identical) as the one originally approved;
   c) If the Acceptance holder has not complied with all the requirements of this acceptance, including the correct installation of the product;
   d) The engineer who originally prepared, signed and sealed the required documentation initially submitted is no longer practicing the engineering profession.

4. Any revision or change in the materials, use, and/or manufacture of the product or process shall automatically be cause for termination of this Acceptance, unless prior written approval has been requested (through the filing of a revision application with appropriate fee) and granted by this office.

5. Any of the following shall also be grounds for removal of this Acceptance:
   a) Unsatisfactory performance of this product or process.
   b) Misuse of this Acceptance as an endorsement of any product, for sales, advertising or any other purpose.

6. The Notice of Acceptance number preceded by the words Miami-Dade County, Florida, and followed by the expiration date may be displayed in advertising literature. If any portion of the Notice of Acceptance is displayed, then it shall be done in its entirety.

7. A copy of this Acceptance as well as approved drawings and other documents, where it applies, shall be provided to the user by the manufacturer or its distributors and shall be available for inspection at the job site at all time. The engineer need not reseal the copies.

8. Failure to comply with any section of this Acceptance shall be cause for termination and removal of Acceptance.

9. This Notice of Acceptance consists of pages 1, 2 and this last page 3.

END OF THIS ACCEPTANCE

Raul Rodriguez, Chief
Product Control Division

DESIGN LOAD CAPACITY - PSF

WINDOW DIMENSIONS		NON-IMPACT WINDOWS DADE COUNTY APPD. IMPACT RESISTANT SHUTTERS REQD.				IMPACT RESISTANT WINDOWS SHUTTERS NOT REQUIRED					
		DSB-INSULATED 1/8" ANN. GLASS		DSB-INSULATED 1/8" TEMP. GLASS		GLASSLAM SAFETY PLUS 1/8" ANN. GLASS		GLASSLAM SAFETY PLUS 1/8" HEAT ST. GLASS		GLOBE AMERADA P380 1/8" CHEM-TEM GLASS	
WIDTH	HEIGHT	EXT. (+)	INT. (-)	EXT. (+)	INT. (-)	EXT. (+)	INT. (-)	EXT. (+)	INT. (-)	EXT. (+)	INT. (-)
36"	40"	77.9	77.9	100.0	136.4	66.0	70.9	66.0	75.0	66.0	75.0
40"		71.3	71.3	100.0	128.9	62.8	62.8	66.0	75.0	66.0	75.0
48"		58.9	58.9	100.0	107.4	52.3	52.3	66.0	75.0	66.0	75.0
56"		50.9	50.9	92.4	105.0	45.1	45.1	66.0	75.0	66.0	75.0
60"		46.8	46.8	89.1	101.3	41.4	41.4	66.0	75.0	66.0	75.0
64"		43.7	43.7	86.4	98.2	38.8	38.8	66.0	75.0	66.0	75.0
72"		38.9	38.9	82.2	93.5	34.0	34.0	66.0	68.1	66.0	68.1
36"	48"	65.0	65.0	100.0	119.3	57.7	57.7	66.0	75.0	66.0	75.0
40"		58.9	58.9	100.0	107.4	52.3	52.3	66.0	75.0	66.0	75.0
48"		50.0	50.0	89.5	89.5	53.7	53.7	66.0	75.0	66.0	75.0
56"		44.8	44.8	86.6	95.9	46.6	46.6	66.0	75.0	66.0	75.0
60"		41.6	41.6	82.5	89.5	43.7	43.7	66.0	75.0	66.0	75.0
64"		38.0	38.0	79.2	90.0	41.1	41.1	66.0	75.0	66.0	75.0
72"		32.9	32.9	74.3	84.4	35.3	35.3	66.0	70.6	66.0	70.6
36"	56"	54.0	54.0	97.3	110.5	49.4	49.4	66.0	75.0	66.0	75.0
40"		50.9	50.9	92.4	105.0	45.1	45.1	66.0	75.0	66.0	75.0
48"		44.8	44.8	86.6	95.9	46.6	46.6	66.0	75.0	66.0	75.0
56"		37.1	37.1	82.2	82.2	41.9	41.9	66.0	75.0	66.0	75.0
60"		34.0	34.0	76.7	76.7	39.4	39.4	66.0	75.0	66.0	75.0
64"		31.9	31.9	75.4	85.7	37.0	37.0	66.0	74.0	66.0	74.0
72"		28.4	28.4	69.4	76.7	34.6	34.6	66.0	69.3	66.0	69.3
36"	60"	50.0	50.0	94.3	107.1	46.0	46.0	66.0	75.0	66.0	75.0
40"		46.8	46.8	89.1	101.3	41.4	41.4	66.0	75.0	66.0	75.0
48"		41.6	41.6	82.5	89.5	43.7	43.7	66.0	75.0	66.0	75.0
56"		34.0	34.0	76.7	76.7	39.4	39.4	66.0	75.0	66.0	75.0
60"		31.7	31.7	71.6	71.6	37.5	37.5	66.0	71.6	66.0	71.6
64"		29.7	29.7	74.5	80.6	36.8	36.8	66.0	73.6	66.0	73.6
72"		26.6	26.6	67.9	71.6	33.8	33.8	66.0	67.7	66.0	67.7
36"	64"	46.6	46.6	91.8	104.3	42.8	42.8	66.0	75.0	66.0	75.0
40"		43.7	43.7	86.4	98.2	38.8	38.8	66.0	75.0	66.0	75.0
48"		38.0	38.0	79.2	90.0	41.1	41.1	66.0	75.0	66.0	75.0
56"		31.9	31.9	75.4	85.7	37.0	37.0	66.0	74.0	66.0	74.0
60"		29.7	29.7	74.5	80.6	36.8	36.8	66.0	73.6	66.0	73.6
64"		28.1	28.1	74.3	75.5	36.6	36.6	66.0	73.3	66.0	73.3
72"		25.2	25.2	66.8	67.1	31.2	31.2	62.5	62.5	62.5	62.5
36"	72"	38.2	38.2	88.0	100.0	37.9	37.9	66.0	75.0	66.0	75.0
40"		38.9	38.9	82.2	93.5	34.0	34.0	66.0	68.1	66.0	68.1
48"		32.9	32.9	74.3	84.4	35.3	35.3	66.0	70.6	66.0	70.6
56"		28.4	28.4	69.4	76.7	34.6	34.6	66.0	69.3	66.0	69.3
60"		26.6	26.6	67.9	71.6	33.8	33.8	66.0	67.7	66.0	67.7
64"		25.2	25.2	66.8	67.1	31.2	31.2	62.5	62.5	62.5	62.5
72"		–	–	59.7	59.7	–	–	–	–	–	–

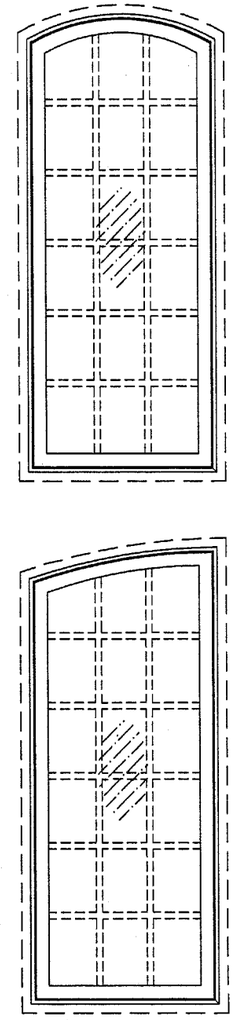

SEGMENT HEAD WINDOWS

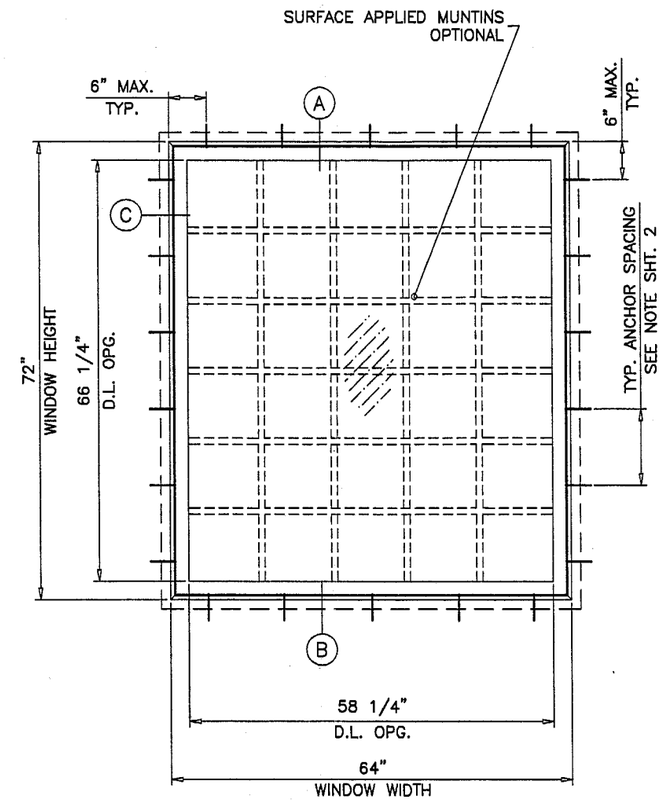

TYPICAL ELEVATION
TESTED UNIT (IMPACT)

NOTES

1. THIS STRUCTURE IS DESIGNED AS PER THE SOUTH FLORIDA BUILDING CODE 1994 EDITION FOR DADE COUNTY. ALSO FOR WIND LOADS AS PER ASCE 7 USING CORRESPONDING LOADS.
2. WOOD BUCKS BY OTHERS, MUST BE ANCHORED PROPERLY TO TRANSFER LOADS TO THE STRUCTURE.
3. ANCHORS SHALL BE AS LISTED, SPACED AS SHOWN ON DETAILS. ANCHOR EMBEDMENT TO BASE MATERIAL SHALL BE BEYOND WALL DRESSING OR STUCCO.
4. ANCHORING OR LOADING CONDITIONS NOT SHOWN IN THESE DETAILS ARE NOT PART OF THIS APPROVAL.

Engr: DR. HUMAYOUN FAROOQ
STRUCTURES
FLA. PE # 16557

JUL 25 2001

APPROVED AS COMPLYING WITH THE SOUTH FLORIDA BUILDING CODE
DATE November 29, 2001
BY
PRODUCT CONTROL DIVISION
BUILDING CODE COMPLIANCE OFFICE
ACCEPTANCE NO. 01-0814.01

AL-FAROOQ CORPORATION
ENGINEERS, PLANNERS & PRODUCT DESIGN
1235 SW 87 AVE
MIAMI, FLORIDA 33174
TEL. (305) 264-8100 FAX. (305) 262-6978

COMP-ANL\W98-90CO

'CAR CLAD' WOOD FIXED WINDOW

CARADCO WOOD WINDOWS & PATIO DOORS
201 EVANS ROAD
RANTOUL, ILLINOIS 61866
TEL. (217) 893-4444 FAX (217) 893-0921

revisions:

no	date	by	description
A	07.25.01		CHART REV. PER ASTM E-1300

date: 11-02-98
scale: 1/2" = 1"
dr. by: HAMID
chk. by:

drawing no. W98-90

sheet 1 of 5

WOOD BUCKS NOT BY CARADCO, MUST SUSTAIN LOADS IMPOSED BY GLAZING SYSTEM AND TRANSFER THEM TO THE BUILDING STRUCTURE.

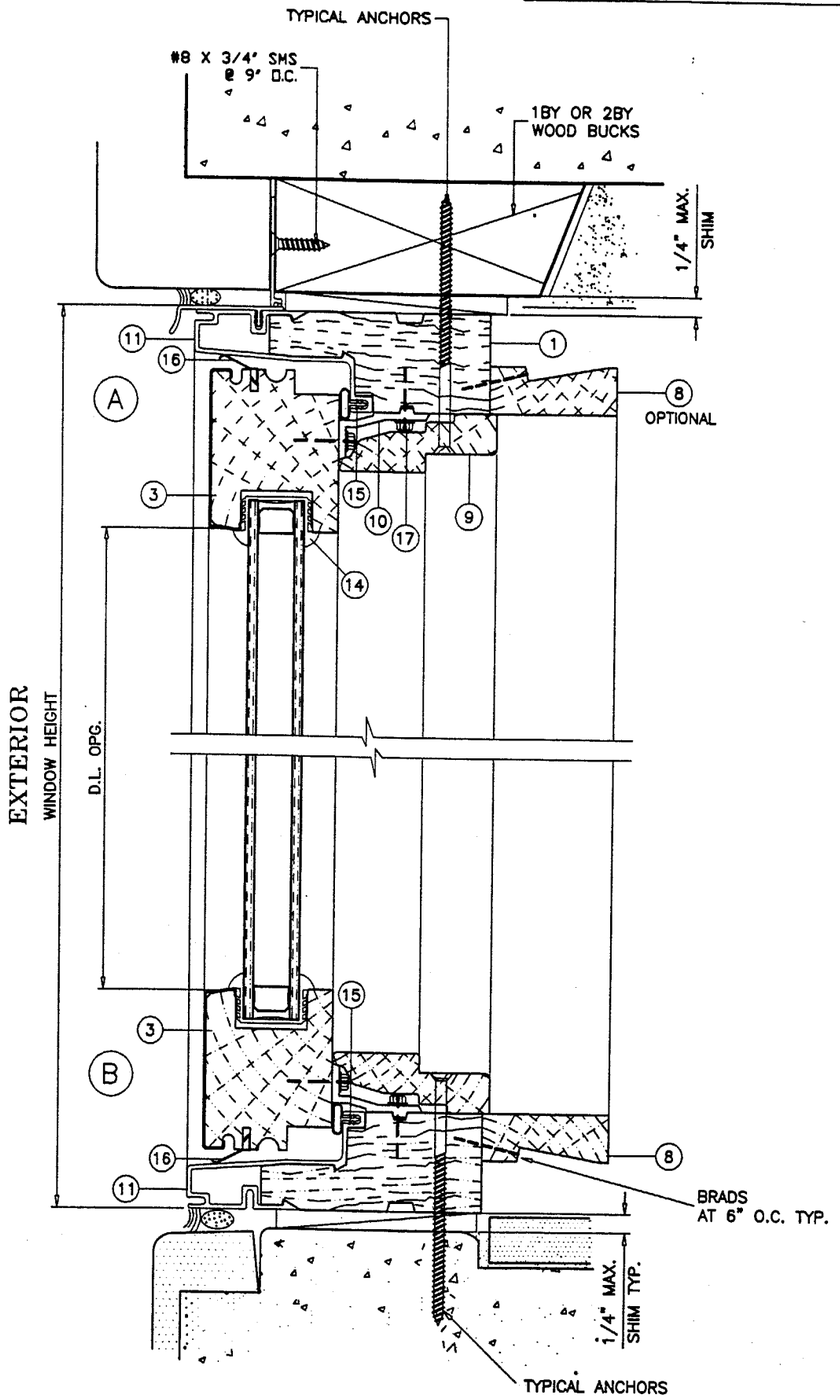

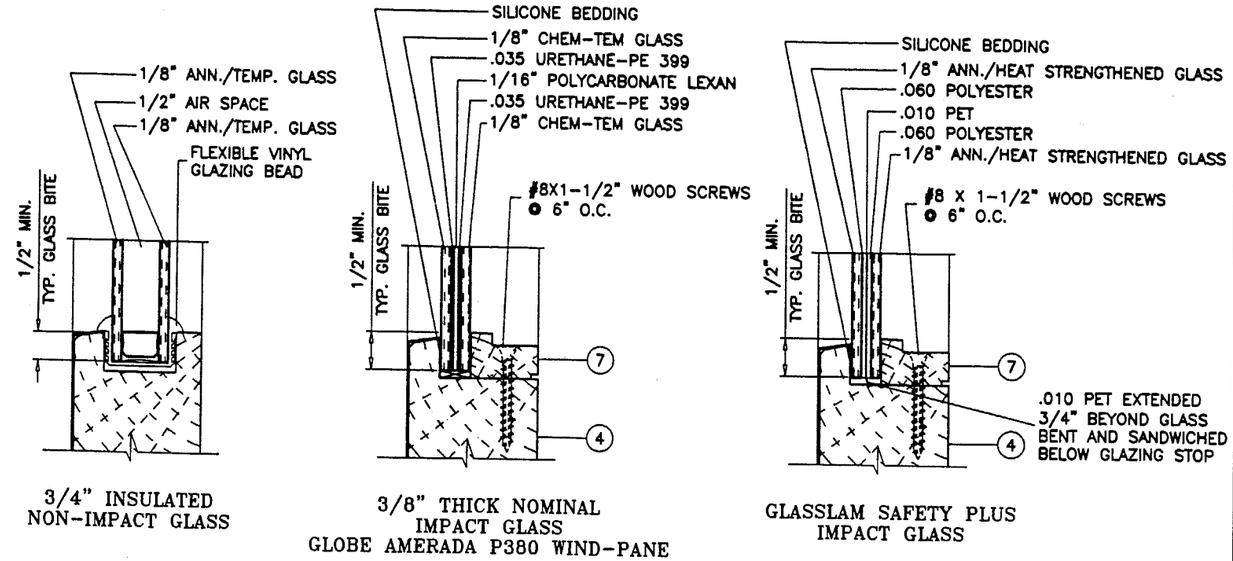

GLASS OPTIONS

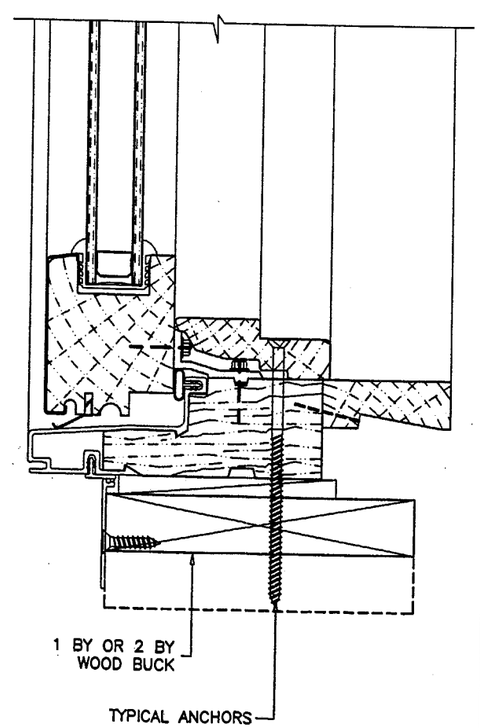

TYPICAL ANCHORS:

A. INTO 2BY WOOD BUCKS OR WOOD STRUCTURE # 10 SMS WITH 1-3/8" MIN. PENETRATION INTO WOOD AT 6" FROM ENDS AND 8" O.C.

B. INTO 1BY WOOD BUCKS OR INTO MASONRY 3/16" DIA. TAPCONS WITH 1-1/4" MIN. EMBED INTO MASONRY AT 6" FROM ENDS AND 12" O.C.

Engr: DR. HUMAYOUN FAROOQ
STRUCTURES
FLA. PE # 16557

JUL 2 5 2001

APPROVED AS COMPLYING WITH THE SOUTH FLORIDA BUILDING CODE
DATE November 29, 2001
BY
PRODUCT CONTROL DIVISION
BUILDING CODE COMPLIANCE OFFICE
ACCEPTANCE NO. 01-0814.01

AL-FAROOQ CORPORATION
ENGINEERS, PLANNERS & PRODUCT DESIGN
1235 SW 87 AVE
MIAMI, FLORIDA 33174
TEL. (305) 264-8100 FAX. (305) 262-6978
COMP-ANL\W98-90CO

'CAR CLAD' WOOD FIXED WINDOW

CARADCO WOOD WINDOWS & PATIO DOORS
201 EVANS ROAD
RANTOUL, ILLINOIS 61866
TEL. (217) 893-4444 FAX (217) 893-0921

revisions:

no	date	by	description

date: 11-02-98
scale: 1/2" = 1"
dr. by: HAMID
chk. by:

drawing no. W98-90

ITEM #	REQD.	PART NO.	DESCRIPTION	MATERIAL	MANF./SUPPLIER, MARKS
1	AS REQD.	CA-03/04	HEAD/SILL/JAMB	TIMBERSTRAND	CARADCO
2	-	-	-	WOOD	CARADCO
3	2/SASH	-	SASH RAIL (INSUL. GLASS)	WOOD	CARADCO
4	2/ SASH	CA-14	SASH RAIL (LAM. GLASS)	WOOD	CARADCO
5	2/ SASH	-	SASH STILE (INSUL. GLASS)	WOOD	CARADCO
6	2/ SASH	CA-15	SASH STILE (LAM. GLASS)	WOOD	CARADCO
7	4/ SASH	CA-16/17	GLASS STOP (LAM. GLASS ONLY)	WOOD	CARADCO
8	4	CA-18/19	X-JAMB (OPTIONAL)	WOOD	CARADCO
9	4	CA-10	VERTICAL/HORIZONTAL STOP	WOOD	CARADCO
10	AS REQD.	-	VENT BRACKET, 7/8" LONG	NYLON	AT 6" FROM ENDS & 12" O.C.
11	AS REQD.	P-14	FRAME NOSING	6063-T5	-
12	1/MULLION	CA-13	MULLION CASING	WOOD	CARADCO
13	1/ MULLION	PP25	MULLION CONNECTOR	6063-T5	CARADCO
14	AS REQD.	P52	3/4" GLAZING GASKET (INSUL. GLASS ONLY)	VINYL	CARADCO
15	AS REQD.	S90-078	BULB WEATHERSTRIP	PVC	AT EACH FRAME MEMBER
16	AS REQD.	PPO	LEAF WEATHERSTRIP	POLYPROPYLENE	AT EACH SASH MEMBER
17	AS REQD.	2/BRACKET	# 8 X 1" HEX HEAD WOOD SCREWS	-	-

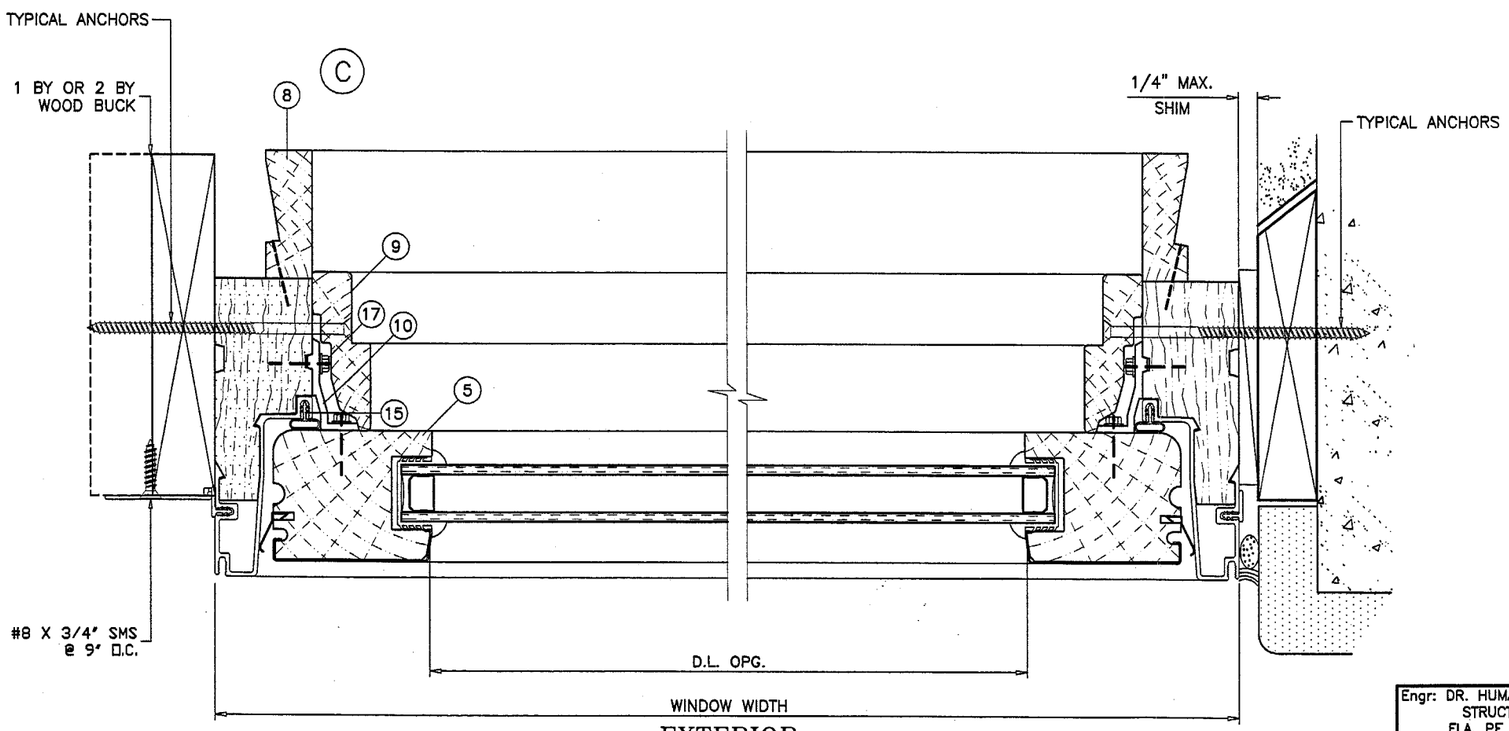

EXTERIOR

Engr: DR. HUMAYOUN FAROOQ
STRUCTURES
FLA. PE # 16557

JUL 2 5 2001

APPROVED AS COMPLYING WITH THE SOUTH FLORIDA BUILDING CODE
DATE November 29, 2001
BY
PRODUCT CONTROL DIVISION
BUILDING CODE COMPLIANCE OFFICE
ACCEPTANCE NO. 01-0614.01

AL-FAROOQ CORPORATION
ENGINEERS, PLANNERS & PRODUCT DESIGN
1235 SW 87 AVE
MIAMI, FLORIDA 33174
TEL. (305) 264-8100 FAX. (305) 262-6978

COMP-ANL\W98-90CO

'CAR CLAD' WOOD FIXED WINDOW

CARADCO WOOD WINDOWS & PATIO DOORS
201 EVANS ROAD
RANTOUL, ILLINOIS 61866
TEL. (217) 893-4444 FAX (217) 893-0921

revisions:

no	date	by	description

date: 11-02-98
scale: 1/2" = 1"
dr. by: HAMID
chk. by:

drawing no.
W98-90

SASH AND OTHER WOOD COMPONENTS TO BE WHITE PINE OR PONDEROSA PINE. FRAME MEMBERS TO BE TIMBERSTRAND.

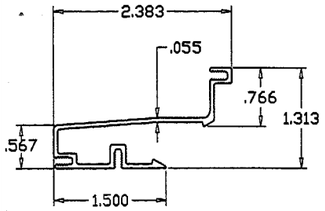

FRAME NOSING

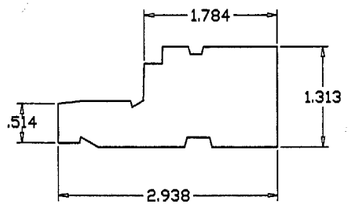

HEAD/SILL/JAMB

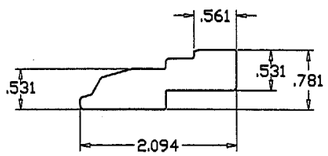

VENT STOP

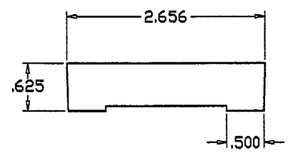

INT. MULLION CASING

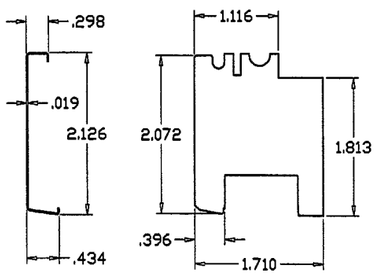

SASH RAIL (INSULATED GLASS)

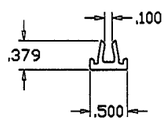

MULLION CONNECTOR

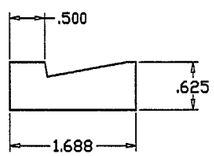

X-JAMB

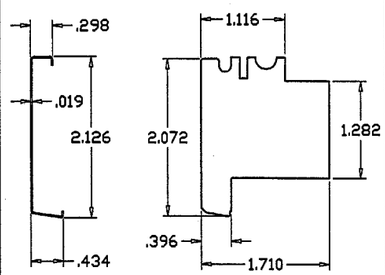

SASH RAIL (LAMINATED GLASS)

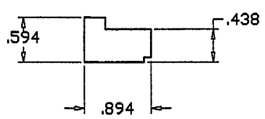

GLASS STOP

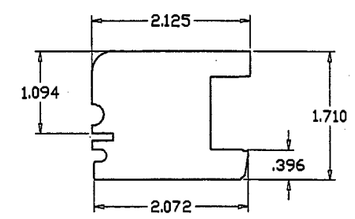

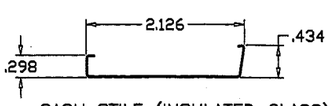

SASH STILE (INSULATED GLASS)

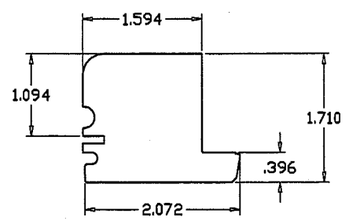

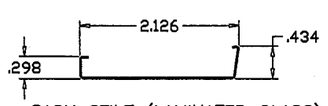

SASH STILE (LAMINATED GLASS)

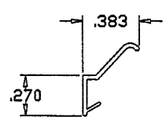

LEAF WEATHERSTRIP

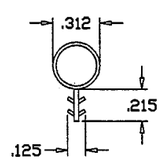

BULB WEATHERSTRIP

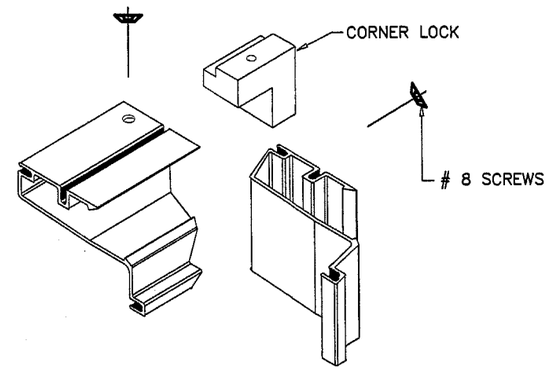

FRAME NOSING CORNER

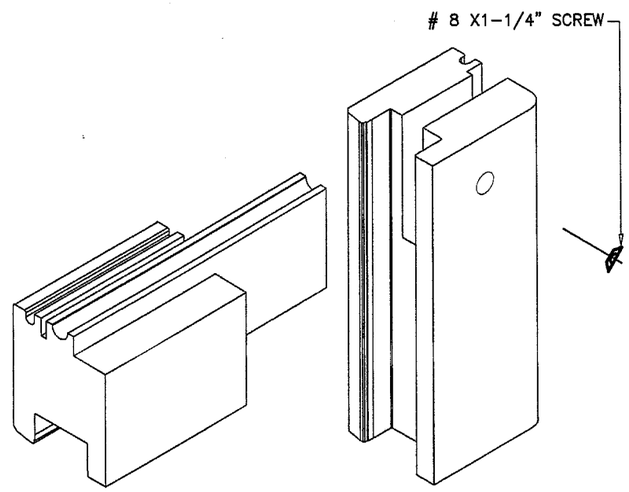

VENT CORNER

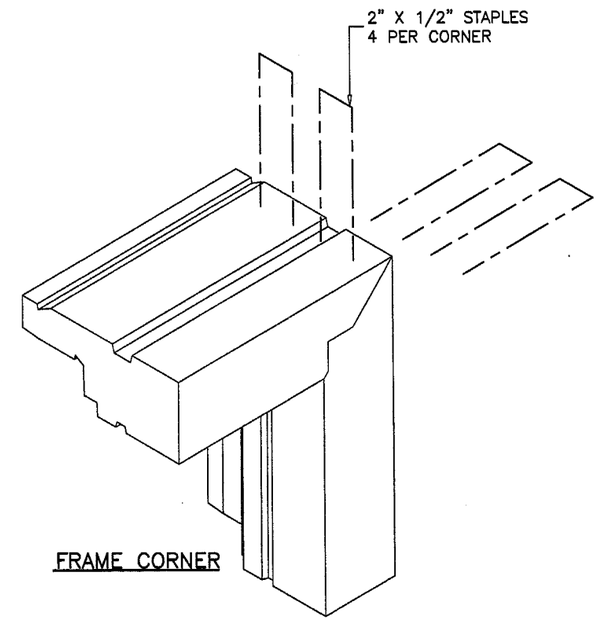

FRAME CORNER

FRAME AND VENT CORNERS SEALED WITH BUTYL TAPE SEALANT. BUTYL CAULK USED IN BETWEEN ALUMINUM/WOOD JOINTS.

Engr: DR. HUMAYOUN FAROOQ
STRUCTURES
FLA. PE # 16557

JUL 2 5 2001

APPROVED AS COMPLYING WITH THE SOUTH FLORIDA BUILDING CODE
DATE 01-0814.01
BY
PRODUCT CONTROL DIVISION
BUILDING CODE COMPLIANCE OFFICE
ACCEPTANCE NO. 01-0814.01

AL-FAROOQ CORPORATION
ENGINEERS, PLANNERS & PRODUCT DESIGN
1235 SW 87 AVE
MIAMI, FLORIDA 33174
TEL. (305) 264-8100 FAX. (305) 262-6978
COMP-ANL\W98-90CO

'CAR CLAD' WOOD FIXED WINDOW

CARADCO WOOD WINDOWS & PATIO DOORS
201 EVANS ROAD
RANTOUL, ILLINOIS 61866
TEL. (217) 893-4444 FAX (217) 893-0921

revisions:

no	date	by	description

date: 11-02-98
scale: 1/2" = 1"
dr. by: HAMID
chk. by:

drawing no. W98-90

DESIGN LOAD CAPACITY – PSF (SIDE/SIDE OR TOP/BOTTOM WINDOWS)

OPERATING CASEMENT, FIXED CASEMENT, AWNING OR ANY COMBINATION THEREOF

WINDOW DIMENSIONS		NON-IMPACT WINDOWS (SHUTTERS REQUIRED) DSB-INSULATED GLASS		IMPACT RESISTANT WINDOWS (SHUTTERS NOT REQD.) 3/8" LAMINATED GLASS	
WIDTH (W)	HEIGHT (H)	EXT.	INT.	EXT.	INT.
15'	40'	140.0	140.0	66.0	80.0
20'		140.0	140.0	66.0	80.0
25'		140.0	140.0	66.0	80.0
30'		140.0	140.0	66.0	80.0
35'		140.0	140.0	66.0	80.0
40'		140.0	140.0	66.0	80.0
45'		140.0	140.0	66.0	80.0
50'		140.0	140.0	66.0	80.0
55'		140.0	140.0	66.0	80.0
15'	48'	140.0	140.0	66.0	80.0
20'		140.0	140.0	66.0	80.0
25'		140.0	140.0	66.0	80.0
30'		140.0	140.0	66.0	80.0
35'		127.1	127.1	66.0	80.0
40'		115.3	115.3	66.0	80.0
45'		114.5	114.5	66.0	80.0
50'		114.5	114.5	66.0	80.0
55'		114.5	114.5	66.0	80.0
15'	56'	140.0	140.0	66.0	80.0
20'		140.0	140.0	66.0	80.0
25'		115.2	115.2	66.0	80.0
30'		99.0	99.0	66.0	80.0
35'		88.3	88.3	66.0	80.0
40'		81.0	81.0	66.0	80.0
45'		76.2	76.2	66.0	76.2
50'		73.4	73.4	66.0	73.4
55'		72.2	72.2	66.0	72.2
15'	60'	140.0	140.0	66.0	80.0
20'		117.7	117.7	66.0	80.0
25'		96.6	96.6	66.0	80.0
30'		83.2	83.2	66.0	80.0
35'		74.2	74.2	66.0	74.2
40'		68.0	68.0	66.0	68.0
45'		63.8	63.8	63.8	63.8
50'		61.0	61.0	61.0	61.0
55'		59.3	59.3	59.3	59.3
15'	64'	126.4	126.4	66.0	80.0
20'		96.5	96.5	66.0	80.0
25'		78.9	78.9	66.0	78.9
30'		67.7	67.7	66.0	67.7
35'		60.0	60.0	60.0	60.0
40'		54.7	54.7	54.7	54.7
45'		50.9	50.9	50.9	50.9
50'		48.3	48.3	48.3	48.3
55'		46.6	46.6	46.6	46.6
15'	72'	88.4	88.4	66.0	80.0
20'		67.2	67.2	66.0	67.2
25'		54.7	54.7	54.7	54.7
30'		46.6	46.6	46.6	46.6
35'		41.0	41.0	41.0	41.0

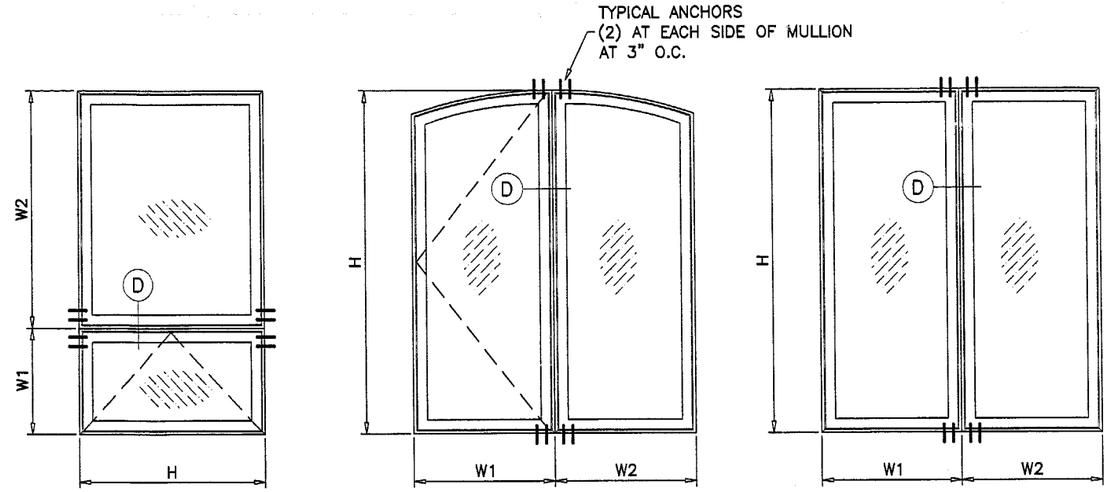

TYPICAL ELEVATIONS

SIDE BY SIDE WINDOWS

SIDE BY SIDE APPLIES TO TWO OR MORE WINDOWS

$$\text{AVG. WINDOW WIDTH} = \frac{W1 + W2}{2}$$

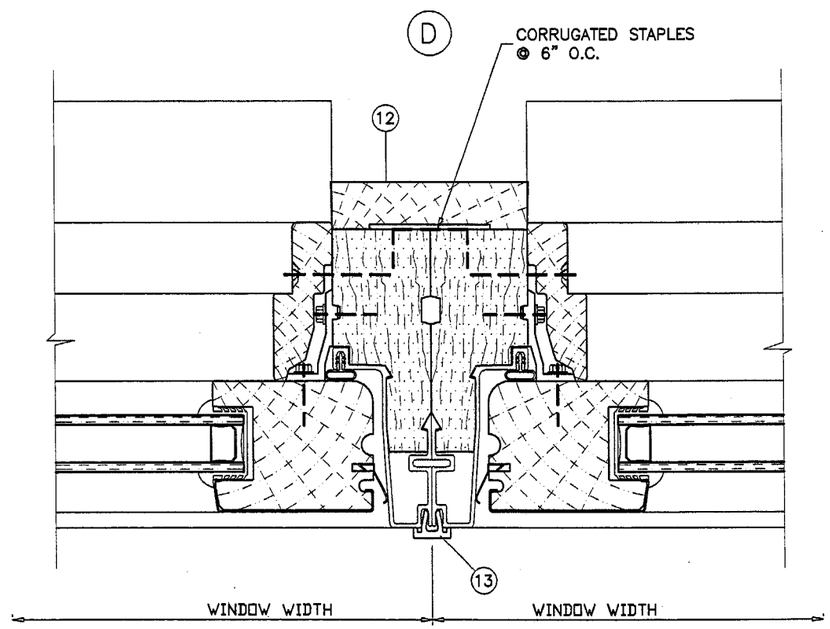

EXTERIOR

VERTICAL OR HORIZONTAL SECTION

NOTES:

1. USE CHART ON THIS SHEET FOR SIDE BY SIDE CONNECTION CAPACITY OF FIXED CASEMENT, OPERATING CASEMENT, AWNING TYPE WINDOW OR ANY COMBINATION OF ABOVE. (WINDOWS WITH IDENTICAL FRAME MEMBERS)
2. FOR FIXED CASEMENT WINDOW CAPACITY SEE SHEET 1. FOR OPERATING CASEMENT OR AWNING TYPE WINDOW CAPACITY SEE THEIR CORRESPONDING NOA.
3. USE SMALLER DESIGN LOAD CAPACITY OF 1 OR 2 ABOVE.

Engr: DR. HUMAYOUN FAROOQ
STRUCTURES
FLA. PE # 16557

JUL 2 5 2001

APPROVED AS COMPLYING WITH THE SOUTH FLORIDA BUILDING CODE
DATE November 29, 2001
BY
PRODUCT CONTROL DIVISION
BUILDING CODE COMPLIANCE OFFICE
ACCEPTANCE NO. 01-0814.01

AL-FAROOQ CORPORATION
ENGINEERS, PLANNERS & PRODUCT DESIGN
1235 SW 87 AVE
MIAMI, FLORIDA 33174
TEL. (305) 264-8100 FAX. (305) 262-6978
COMP-ANL\W98-90CO

'CAR CLAD' WOOD FIXED WINDOW

CARADCO WOOD WINDOWS & PATIO DOORS
201 EVANS ROAD
RANTOUL, ILLINOIS 61866
TEL. (217) 893-4444 FAX (217) 893-0921

revisions:

no	date	by	description

date: 11-02-98
scale: 1/2" = 1"
dr. by: HAMID
chk. by:

drawing no. W98-90