MIAMI-DADE

BUILDING CODE COMPLIANCE OFFICE (BCCO)
PRODUCT CONTROL DIVISION

MIAMI-DADE COUNTY, FLORIDA
METRO-DADE FLAGLER BUILDING
140 WEST FLAGLER STREET, SUITE 1603
MIAMI, FLORIDA 33130-1563
(305) 375-2901 FAX (305) 375-2908

NOTICE OF ACCEPTANCE (NOA)

K.D. Windows, Inc.
3750 Shares Place
Rivera Beach, Fl. 33404

SCOPE:

This NOA is being issued under the applicable rules and regulations governing the use of construction materials. The documentation submitted has been reviewed by the BCCO and accepted by the Building Code and Product Review Committee (BCPRC) to be used in Miami Dade County and other areas where allowed by the Authority Having Jurisdiction (AHJ).

This NOA shall not be valid after the expiration date stated below. The BCCO (In Miami Dade County) and/or the AHJ (in areas other than Miami Dade County) reserve the right to have this product or material tested for quality assurance purposes. If this product or material fails to perform in the accepted manner, the manufacturer will incur the expense of such testing and the AHJ may immediately revoke, modify, or suspend the use of such product or material within their jurisdiction. BCPRC reserves the right to revoke this acceptance, if it is determined by BCCO that this product or material fails to meet the requirements of the applicable building code.

This product is approved as described herein, and has been designed to comply with the South Florida Building Code, 1994 Edition for Miami-Dade County or Florida Building Code.

DESCRIPTION: Aluminum Tube Mullion (framing member)

APPROVAL DOCUMENT: Drawing No. 9608, titled "Mullion Details", sheets 1 through 9, prepared, signed and sealed by Saul Perez, P.E., dated 1/17/02, bearing the Miami-Dade County Product Control Approval stamp with the Notice of Acceptance number and approval date by the Miami-Dade County Product Control Division.

MISSILE IMPACT RATING: Large and Small Missile Impact

LABELING: Each unit shall bear a permanent label with the manufacturer's name or logo, city, state and following statement: "Miami-Dade County Product Control Approved", unless otherwise noted herein.

RENEWAL of this NOA shall be considered after a renewal application has been filed and there has been no change in the applicable building code negatively affecting the performance of this product.

TERMINATION of this NOA will occur after the expiration date or if there has been a revision or change in the materials, use, and/or manufacture of the product or process. Misuse of this NOA as an endorsement of any product, for sales, advertising or any other purposes shall automatically terminate this NOA. Failure to comply with any section of this NOA shall be cause for termination and removal of NOA.

ADVERTISEMENT: The NOA number preceded by the words Miami-Dade County, Florida, and followed by the expiration date may be displayed in advertising literature. If any portion of the NOA is displayed, then it shall be done in its entirety.

INSPECTION: A copy of this entire NOA shall be provided to the user by the manufacturer or its distributors and shall be available for inspection at the job site at the request of the Building Official.

This NOA **revises NOA # 00-0605.07** and, consists of this page 1 as well as approval document mentioned above. The submitted documentation was reviewed by **Raul Rodriguez.**

PRODUCT CONTROL ACCEPTED

GENERAL NOTES:

1. ARCHITECT OR ENGINEER OF RECORD SHALL CALCULATE DESIGN WIND LOADS IN ACCORDANCE WITH ASCE-7-88.
2. MUST SELECT DADE COUNTY APPROVED PRODUCT WHICH COMPLIES WITH THE DESIGN CRITERIA, AS NOTED ABOVE.
3. MUST SELECT FROM MULLION CHARTS AND ANCHOR LOAD TABLES ANGHOR TYPES WHICH MEET OR EXCEED ALL OF THE DESIGN LOADING CONDITIONS.
4. ALL ALUMINUM MULLIONS SHALL CONSIST OF 6063-T5 ALUMINUM ALLOY UNLESS OTHERWISE NOTED.
5. ALL GLAZING PRODUCTS SHALL HAVE METRO DADE PRODUCT CONTROL APPROVAL.
6. ANY ASSEMBLY CONDITION NOT DESCRIBED HEREIN SHALL REQUIRE SEPARATE ENGINEERING
7. ALL ALUMINUM INSERT ANGLES SHALL BE CUT TO FIT SNUGLY INTO THE ALUMINUN MULLIONS
8. ALL TAPCON ANCHORS SHALL DEVELOP A MINIMUM DESIGN SHEAR RESISTANCE OF 255 LBS. AND A MINIMUM DESIGN TENSION (PULL OUT) RESISTANCE OF 214 LBS

MULLION STRUCTURAL PROPERITIES WITH WINDOW FRAMES INCLUDED *

MULLION SIZE	I_x	S_x
1"X2"	.885 IN^4	.784 IN^3
1"X3"	1.504 IN^4	1.086 IN^3
1"X4"	2.591 IN^4	1.471 IN^3
2"X4"	3.530 IN^4	1.941 IN^3
2"X6"	8.829 IN^4	3.211 IN^3

* NOTE THESE PROPERTIES INCLUDE THE WINDOW HEAD OR JAMB ON EACH SIDE OF THE MULLION

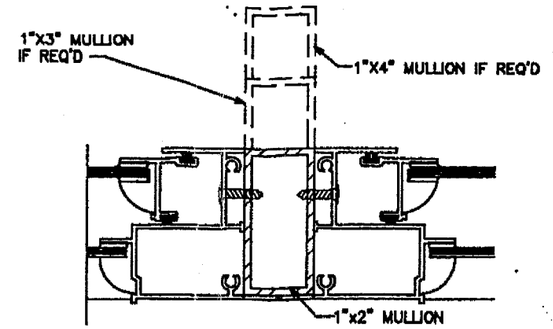

SECTION 'A-A' TYPICAL FOR 1"X2", 1"X3" & 1"X4" MULLIONS

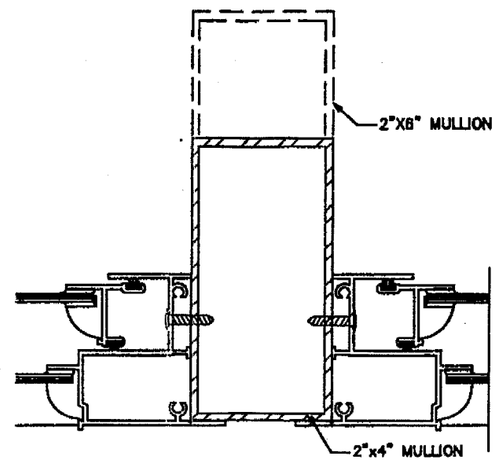

SECTION 'A-A' TYPICAL FOR 2"X4" & 2"X6" MULLIONS

NOTE:
ALL INSTALLATIONS SHALL USE S.H. FRAME WINDOW JAMB OR H.S. FRAME WINDOW HEAD AS MANUFACTURED BY LINDALEX DIE NO. GAS-42880

APPROVED AS COMPLYING WITH THE SOUTH FLORIDA BUILDING CODE
DATE February 21, 2002
BY
PRODUCT CONTROL DIVISION
BUILDING CODE COMPLIANCE OFFICE
ACCEPTANCE NO. 01-0910.02

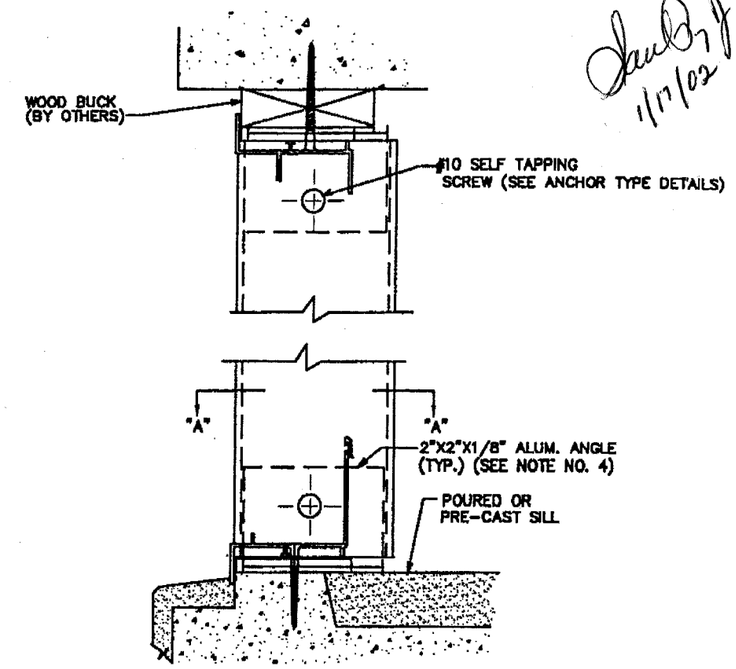

TYPICAL MULLION SECTION

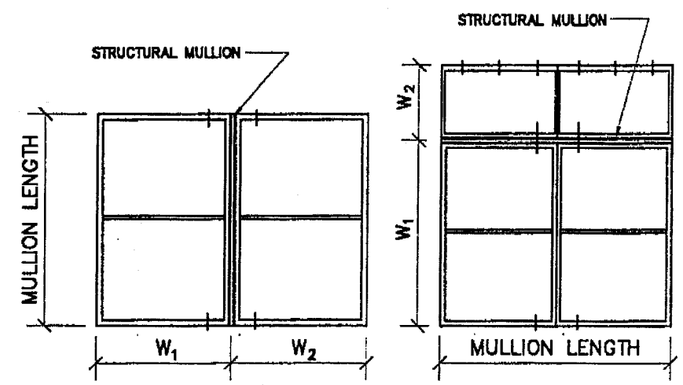

VERT. MULLIONS

HORIZ. MULLIONS

$$\text{TRIBUTARY WIDTH} = \frac{W_1 + W_2}{2}$$

TYPICAL MULLION ELEVATION

Saul Perez 1/17/02

Florida P.E. No. 37337

SAUL PEREZ
STRUCTURAL ENGINEER
16451 NW 82nd Place,
MIAMI, FL. 33018 (305) 558-0888

REVISIONS
1-17-02

MULLION DETAILS
KD Windows
3705 SHARES PLACE - RIVIERA BEACH, FLORIDA 33404

DATE 1/2/97
SCALE FULL
DRAWN MCB
PROJECT
9608
DRAWING NUMBER
1

Mullion Load Table (psf) 1"x2"x1/8" thick Aluminum Mullion					
Tributary	Mullion Length (in.)				
Width (in.)	38.375	50.625	58	63	74.25
20	300.00	209.61	139.39	108.77	66.44
23	300.00	182.27	121.21	94.58	57.77
26	298.83	161.24	107.22	83.67	51.11
29	267.91	144.56	96.13	75.01	45.82
32	242.80	131.01	87.12	67.98	41.52
35	221.99	119.78	79.65	62.15	37.97
38	204.46	110.32	73.36	57.25	34.97
41	189.50	102.25	67.99	53.06	32.41
44	176.58	95.28	63.36	49.44	30.20
47	165.31	89.20	59.31	46.28	28.27
50	155.39	83.85	55.76	43.51	26.58
53	146.59	79.10	52.60	41.04	25.07
56	138.74	74.86	49.78	38.84	23.73
59	131.69	71.06	47.25	36.87	22.52
62	125.32	67.62	44.96	35.09	21.43
65	119.53	64.50	42.89	33.47	20.44
68	114.26	61.65	41.00	31.99	19.54
71	109.43	59.05	39.26	30.64	18.72
74	104.99	56.65	37.67	29.40	17.96
77	100.90	54.45	36.21	28.25	17.26
80	97.12	52.40	34.85	27.19	16.61
83	93.61	50.51	33.59	26.21	16.01
86	90.34	48.75	32.42	25.29	15.45
89	87.30	47.10	31.32	24.44	14.93
92	84.45	45.57	30.30	23.64	14.44
95	81.78	44.13	29.35	22.90	13.99
98	79.28	42.78	28.45	22.20	13.56
101	76.93	41.51	27.60	21.54	13.16
104	74.71	40.31	26.81	20.92	12.78

Mullion Load Table (psf) 1"x3"x1/8" thick Aluminum Mullion					
Tributary	Mullion Length (in.)				
Width (in.)	38.375	50.625	58	63	74.25
20	300.00	300.00	235.49	184.75	112.85
23	300.00	268.78	204.78	160.65	98.13
26	300.00	237.77	181.15	142.12	86.81
29	300.00	213.17	162.41	127.41	77.83
32	300.00	193.19	147.18	115.47	70.53
35	300.00	176.63	134.57	105.57	64.49
38	283.13	162.69	123.94	97.24	59.40
41	262.41	150.78	114.87	90.12	55.05
44	244.52	140.50	107.04	83.98	51.30
47	228.91	131.53	100.21	78.62	48.02
50	215.18	123.64	94.20	73.90	45.14
53	203.00	116.64	88.86	69.72	42.59
56	192.12	110.39	84.10	65.98	40.31
59	182.35	104.78	79.83	62.63	38.26
62	173.53	99.71	75.97	59.60	36.40
65	165.52	95.11	72.46	56.85	34.72
68	158.22	90.91	69.26	54.34	33.19
71	151.53	87.07	66.34	52.04	31.79
74	145.39	83.54	63.65	49.93	30.50
77	139.72	80.29	61.17	47.99	29.31
80	134.49	77.28	58.87	46.19	28.21
83	129.62	74.48	56.74	44.52	27.19
86	125.10	71.88	54.77	42.97	26.25
89	120.89	69.46	52.92	41.52	25.36
92	116.94	67.20	51.19	40.16	24.53
95	113.25	65.07	49.58	38.90	23.76
98	109.78	63.08	48.06	37.70	23.03
101	106.52	61.21	46.63	36.58	22.35
104	103.45	59.44	45.29	35.53	21.70

Mullion Load Table (psf) 1"x4"x1/8" thick Aluminum Mullion					
Tributary	Mullion Length (in.)				
Width (in.)	38.375	50.625	58	63	74.25
20	300.00	300.00	300.00	270.40	194.45
23	300.00	300.00	277.41	235.13	169.09
26	300.00	300.00	245.40	208.00	149.58
29	300.00	288.79	220.02	186.48	134.10
32	300.00	261.72	199.39	169.00	121.53
35	300.00	239.28	182.30	154.51	111.11
38	300.00	220.39	167.91	142.31	102.34
41	300.00	204.27	155.62	131.90	94.85
44	300.00	190.34	145.01	122.91	88.39
47	300.00	178.19	135.76	115.06	82.74
50	291.50	167.50	127.61	108.16	77.78
53	275.00	158.02	120.39	102.04	73.38
56	260.27	149.55	113.94	96.57	69.45
59	247.04	141.95	108.14	91.66	65.91
62	235.08	135.08	102.91	87.22	62.73
65	224.23	128.85	98.16	83.20	59.83
68	214.34	123.16	93.83	79.53	57.19
71	205.29	117.96	89.87	76.17	54.77
74	196.96	113.18	86.22	73.08	52.55
77	189.29	108.77	82.86	70.23	50.51
80	182.19	104.69	79.76	67.60	48.61
83	175.61	100.90	76.87	65.16	46.86
86	169.48	97.38	74.19	62.88	45.22
89	163.77	94.10	71.69	60.76	43.70
92	158.43	91.03	69.35	58.78	42.27
95	153.42	88.16	67.16	56.93	40.94
98	148.73	85.46	65.11	55.18	39.68
101	144.31	82.92	63.17	53.54	38.50
104	140.15	80.53	61.35	52.00	37.39

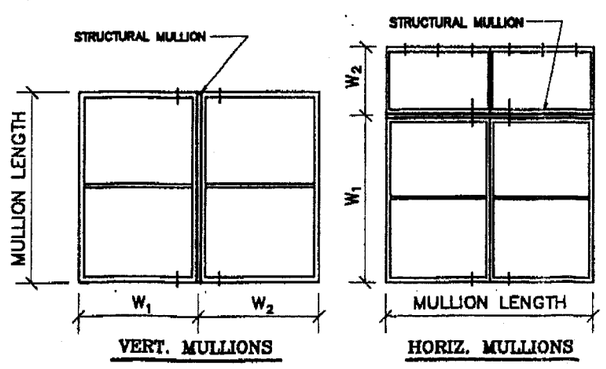

TYPICAL MULLION ELEVATION

$$\text{TRIBUTARY WIDTH} = \frac{W_1 + W_2}{2}$$

APPROVED AS COMPLYING WITH THE
SOUTH FLORIDA BUILDING CODE
DATE February 21, 2002
BY
PRODUCT CONTROL DIVISION
BUILDING CODE COMPLIANCE OFFICE
ACCEPTANCE NO. 01-0910.02

1/17/02

Florida P.E. No. 37337
SAUL PEREZ
STRUCTURAL ENGINEER
10461 NW 88nd Place,
MIAMI, FL. 33018 (305) 558-0828

REVISIONS
1-17-02

MULLION DETAILS

KD Windows

3705 SHARES PLACE - RIVIERA BEACH, FLORIDA 33404

DATE 1/16/97
SCALE FULL
DRAWN
PROJECT 9608
DRAWING NUMBER 2

Mullion Load Table (psf)
2"x4"x1/8" thick Aluminum Mullion

Tributary Width (in.)	Mullion Length (in.)								
	38.375	50.625	58	63	74.25	96	108	120	146
20	300.00	300.00	300.00	300.00	256.77	122.56	86.08	62.75	34.84
23	300.00	300.00	300.00	300.00	223.28	106.58	74.85	54.57	30.30
26	300.00	300.00	300.00	274.36	197.52	94.28	66.22	48.27	26.80
29	300.00	300.00	290.21	245.97	177.08	84.53	59.37	43.28	24.03
32	300.00	300.00	263.00	222.91	160.48	76.60	53.80	39.22	21.78
35	300.00	300.00	240.46	203.81	146.73	70.04	49.19	35.86	19.91
38	300.00	290.71	221.48	187.72	135.14	64.51	45.31	33.03	18.34
41	300.00	269.44	205.27	173.98	125.25	59.79	41.99	30.61	17.00
44	300.00	251.06	191.28	162.12	116.71	55.71	39.13	28.52	15.84
47	300.00	235.04	179.07	151.77	109.26	52.15	36.63	26.70	14.83
50	300.00	220.94	168.32	142.67	102.71	49.03	34.43	25.10	13.94
53	300.00	208.43	158.80	134.59	96.89	46.25	32.48	23.68	13.15
56	300.00	197.27	150.29	127.38	91.70	43.77	30.74	22.41	12.44
59	300.00	187.23	142.65	120.90	87.04	41.55	29.18	21.27	11.81
62	300.00	178.18	135.74	115.05	82.83	39.54	27.77	20.24	11.24
65	295.77	169.95	129.48	109.74	79.01	37.71	26.49	19.31	10.72
68	282.72	162.45	123.77	104.90	75.52	36.05	25.32	18.46	10.25
71	270.78	155.59	118.54	100.47	72.33	34.53	24.25	17.68	9.81
74	259.80	149.28	113.73	96.40	69.40	33.13	23.26	16.96	9.42
77	249.68	143.47	109.30	92.64	66.69	31.83	22.36	16.30	9.05
80	240.32	138.09	105.20	89.17	64.19	30.64	21.52	15.69	8.71
83	231.63	133.09	101.40	85.94	61.87	29.53	20.74	15.12	8.40
86	223.55	128.45	97.86	82.94	59.71	28.50	20.02	14.59	8.10
89	216.01	124.12	94.56	80.15	57.70	27.54	19.34	14.10	7.83
92	208.97	120.07	91.48	77.54	55.82	26.64	18.71	13.64	7.57
95	202.37	116.28	88.59	75.09	54.06	25.80	18.12	13.21	7.34
98	196.18	112.72	85.88	72.79	52.40	25.01	17.57	12.81	7.11
101	190.35	109.37	83.33	70.63	50.85	24.27	17.05	12.43	6.90
104	184.86	106.22	80.92	68.59	49.38	23.57	16.55	12.07	6.70

Mullion Load Table (psf)
2"x6"x1/8" thick Aluminum Mullion

Tributary Width (in.)	Mullion Length (in.)								
	38.375	50.625	58	63	74.25	96	108	120	146
20	300.00	300.00	300.00	300.00	300.00	254.15	200.81	156.97	87.15
23	300.00	300.00	300.00	300.00	300.00	221.00	174.62	136.49	75.79
26	300.00	300.00	300.00	300.00	300.00	195.50	154.47	120.74	67.04
29	300.00	300.00	300.00	300.00	293.01	175.28	138.49	108.25	60.11
32	300.00	300.00	300.00	300.00	265.54	158.85	125.51	98.10	54.47
35	300.00	300.00	300.00	300.00	242.78	145.23	114.75	89.69	49.80
38	300.00	300.00	300.00	300.00	223.61	133.77	105.69	82.61	45.87
41	300.00	300.00	300.00	287.88	207.25	123.98	97.96	76.57	42.51
44	300.00	300.00	300.00	268.25	193.12	115.52	91.28	71.35	39.62
47	300.00	300.00	296.29	251.13	180.79	108.15	85.45	66.79	37.09
50	300.00	300.00	278.51	236.06	169.94	101.66	80.33	62.79	34.86
53	300.00	300.00	262.75	222.70	160.32	95.91	75.78	59.23	32.89
56	300.00	300.00	248.67	210.77	151.74	90.77	71.72	56.06	31.13
59	300.00	300.00	236.03	200.05	144.02	86.15	68.07	53.21	29.54
62	300.00	294.81	224.61	190.37	137.05	81.99	64.78	50.63	28.11
65	300.00	281.21	214.24	181.58	130.73	78.20	61.79	48.30	26.82
68	300.00	268.80	204.79	173.57	124.96	74.75	59.06	46.17	25.63
71	300.00	257.44	196.14	166.24	119.68	71.59	56.57	44.22	24.55
74	300.00	247.01	188.18	159.50	114.83	68.69	54.27	42.42	23.56
77	300.00	237.38	180.85	153.28	110.35	66.01	52.16	40.77	22.64
80	300.00	228.48	174.07	147.54	106.22	63.54	50.20	39.24	21.79
83	300.00	220.22	167.78	142.20	102.38	61.24	48.39	37.82	21.00
86	300.00	212.54	161.93	137.24	98.80	59.11	46.70	36.50	20.27
89	300.00	205.38	156.47	132.62	95.47	57.11	45.13	35.27	19.59
92	300.00	198.68	151.37	128.29	92.36	55.25	43.66	34.12	18.95
95	300.00	192.40	146.59	124.24	89.44	53.51	42.28	33.05	18.35
98	300.00	186.51	142.10	120.44	86.71	51.87	40.98	32.03	17.79
101	300.00	180.97	137.88	116.86	84.13	50.33	39.76	31.08	17.26
104	300.00	175.75	133.90	113.49	81.70	48.88	38.62	30.19	16.76

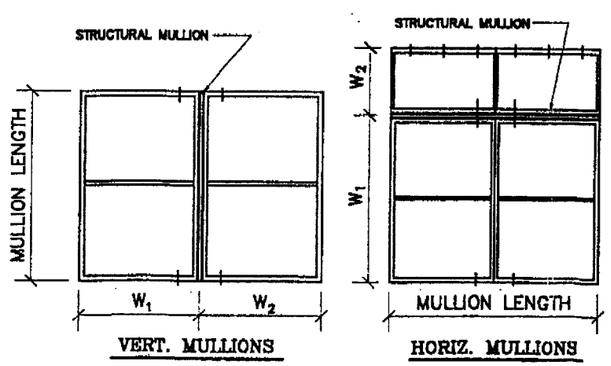

TYPICAL MULLION ELEVATION

$$\text{TRIBUTARY WIDTH} = \frac{W_1 + W_2}{2}$$

APPROVED AS COMPLYING WITH THE
SOUTH FLORIDA BUILDING CODE
DATE February 21, 2007
BY
PRODUCT CONTROL DIVISION
BUILDING CODE COMPLIANCE OFFICE
ACCEPTANCE NO. 01-0910.02

1/17/02

Florida P.E. No. 37337
SAUL PEREZ
STRUCTURAL ENGINEER
10491 NW 88nd Place,
MIAMI, FL. 33016 (305) 558-0888

REVISIONS
1-17-02

MULLION DETAIL

KD Windows
3705 SHARES PLACE - RIVIERA BEACH, FLORIDA 33404

DATE 1/24/97
SCALE FULL
DRAWN MCOB
PROJECT 9608
DRAWING NUMBER 3

TYPE "A" ANCHOR

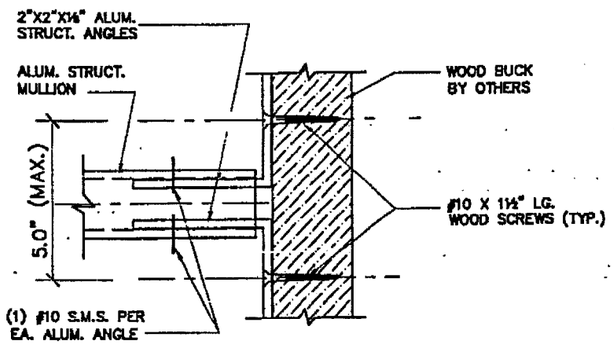

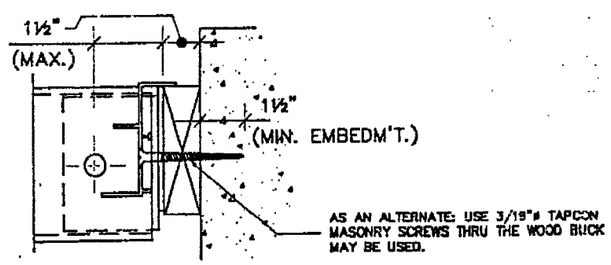

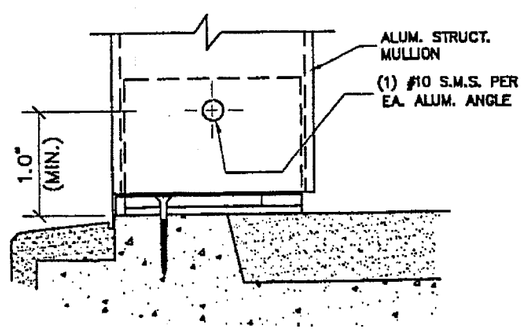

Anchor Design Load Pressure (psf)
Type A : 2 - 3/16" Wood Screws per End in wood buck
(2-3/16" Tap-Con Screws per end thru wood buck)

Tributary Width (in.)	Mullion Length (in.)								
	38.375	50.625	58	63	74.25	96	108	120	146
20	134.45	101.92	88.96	81.90	69.49	53.75	47.77	43.00	35.34
23	116.92	88.62	77.36	71.22	60.43	46.74	41.54	37.39	30.73
26	103.42	78.40	68.43	63.00	53.45	41.34	36.75	33.07	27.18
29	92.73	70.29	61.35	56.48	47.92	37.07	32.95	29.65	24.37
32	84.03	63.70	55.60	51.19	43.43	33.59	29.86	26.87	22.09
35	76.83	58.24	50.83	46.80	39.71	30.71	27.30	24.57	20.19
38	70.76	53.64	46.82	43.10	36.57	28.29	25.14	22.63	18.60
41	65.59	49.72	43.39	39.95	33.90	26.22	23.30	20.97	17.24
44	61.11	46.33	40.44	37.23	31.59	24.43	21.72	19.54	16.06
47	57.21	43.37	37.85	34.85	29.57	22.87	20.33	18.30	15.04
50	53.78	40.77	35.58	32.76	27.80	21.50	19.11	17.20	14.14
53	50.74	38.46	33.57	30.91	26.22	20.28	18.03	16.23	13.34
56	48.02	36.40	31.77	29.25	24.82	19.19	17.06	15.36	12.62
59	45.58	34.55	30.16	27.76	23.56	18.22	16.19	14.58	11.98
62	43.37	32.88	28.70	26.42	22.42	17.34	15.41	13.87	11.40
65	41.37	31.36	27.37	25.20	21.38	16.54	14.70	13.23	10.87
68	39.54	29.98	26.16	24.09	20.44	15.81	14.05	12.65	10.39
71	37.87	28.71	25.06	23.07	19.57	15.14	13.46	12.11	9.95
74	36.34	27.55	24.04	22.13	18.78	14.53	12.91	11.62	9.55
77	34.92	26.47	23.11	21.27	18.05	13.96	12.41	11.17	9.18
80	33.61	25.48	22.24	20.47	17.37	13.44	11.94	10.75	8.83
83	32.40	24.56	21.44	19.73	16.74	12.95	11.51	10.36	8.52
86	31.27	23.70	20.69	19.05	16.16	12.50	11.11	10.00	8.22
89	30.21	22.90	19.99	18.40	15.62	12.08	10.74	9.66	7.94
92	29.23	22.16	19.34	17.80	15.11	11.68	10.39	9.35	7.68
95	28.31	21.46	18.73	17.24	14.63	11.31	10.06	9.05	7.44
98	27.44	20.80	18.15	16.71	14.18	10.97	9.75	8.77	7.21
101	26.62	20.18	17.62	16.22	13.76	10.64	9.46	8.51	7.00
104	25.86	19.60	17.11	15.75	13.36	10.34	9.19	8.27	6.80

NOTE:

WOOD BUCK INSTALLED BY OTHERS. ARCHIECT OR ENGINEER OF RECORD MUST VERIFY WOOD BUCK CAPACITY TO SUSTAIN LOADS BEING IMPOSED BY WINDOW AND MULLION SYSTEM.

APPROVED AS COMPLYING WITH THE SOUTH FLORIDA BUILDING CODE
DATE February 21, 2002
BY
PRODUCT CONTROL DIVISION
BUILDING CODE COMPLIANCE OFFICE
ACCEPTANCE NO. 01-0910.02

1/17/02

Florida P.E. No. 37337
SAUL PEREZ
STRUCTURAL ENGINEER
18481 NW 68nd Place.
MIAMI, FL. 33015
(800) 668-0682

REVISIONS
1-17-02

MULLION DETAIL
KD Windows
3705 SHARES PLACE - RIVIERA BEACH, FLORIDA 33404

DATE
SCALE
DRAWN
PROJECT
9608
DRAWING NUMBER
4

TYPE "B" ANCHOR

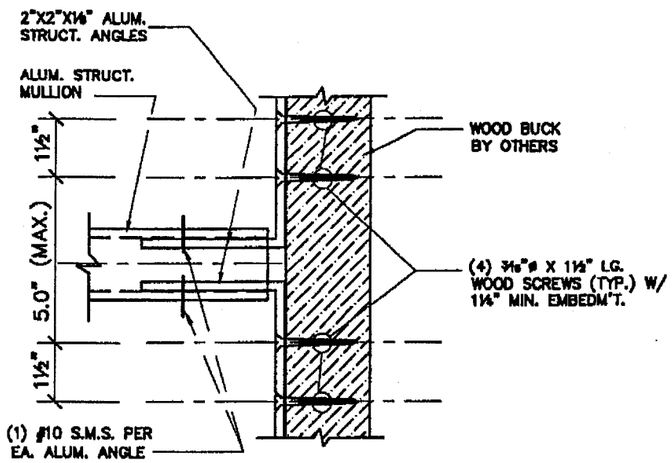

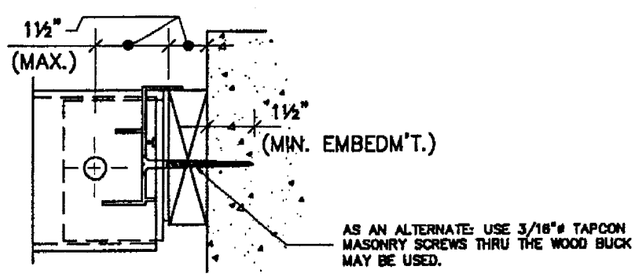

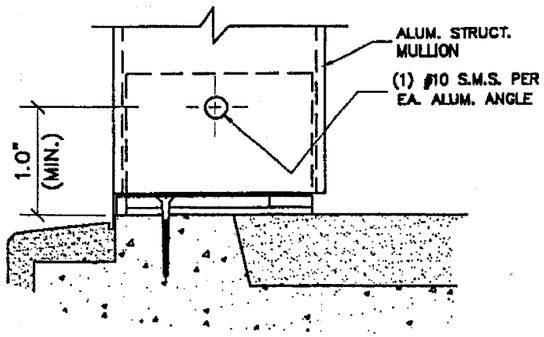

Anchor Design Load Pressure (psf) Type B : 4 - 3/16" Wood Screws per End in wood buck (4 - 3/16" Tap-Con Screws per End thru Wood Buck)									
Tributary Width (in.)	Mullion Length (in.)								
	38.375	50.625	58	63	74.25	96	108	120	146
20	268.90	203.84	177.92	163.80	138.98	107.49	95.55	85.99	70.68
23	233.83	177.25	154.71	142.43	120.85	93.47	83.09	74.78	61.46
26	206.85	156.80	136.86	126.00	106.91	82.69	73.50	66.15	54.37
29	185.45	140.58	122.70	112.96	95.85	74.13	65.90	59.31	48.74
32	168.07	127.40	111.20	102.37	86.86	67.18	59.72	53.75	44.17
35	153.66	116.48	101.67	93.60	79.42	61.42	54.60	49.14	40.39
38	141.53	107.28	93.64	86.21	73.15	56.57	50.29	45.26	37.20
41	131.17	99.43	86.79	79.90	67.79	52.44	46.61	41.95	34.48
44	122.23	92.65	80.87	74.45	63.17	48.86	43.43	39.09	32.13
47	114.43	86.74	75.71	69.70	59.14	45.74	40.66	36.59	30.08
50	107.56	81.53	71.17	65.52	55.59	43.00	38.22	34.40	28.27
53	101.47	76.92	67.14	61.81	52.45	40.56	36.06	32.45	26.67
56	96.04	72.80	63.54	58.50	49.64	38.39	34.12	30.71	25.24
59	91.15	69.10	60.31	55.52	47.11	36.44	32.39	29.15	23.96
62	86.74	65.75	57.39	52.84	44.83	34.67	30.82	27.74	22.80
65	82.74	62.72	54.74	50.40	42.76	33.07	29.40	26.46	21.75
68	79.09	59.95	52.33	48.18	40.88	31.62	28.10	25.29	20.79
71	75.75	57.42	50.12	46.14	39.15	30.28	26.92	24.22	19.91
74	72.68	55.09	48.09	44.27	37.56	29.05	25.82	23.24	19.10
77	69.85	52.94	46.21	42.54	36.10	27.92	24.82	22.34	18.36
80	67.23	50.96	44.48	40.95	34.74	26.87	23.89	21.50	17.67
83	64.80	49.12	42.87	39.47	33.49	25.90	23.02	20.72	17.03
86	62.54	47.40	41.38	38.09	32.32	25.00	22.22	20.00	16.44
89	60.43	45.81	39.98	36.81	31.23	24.16	21.47	19.32	15.88
92	58.46	44.31	38.68	35.61	30.21	23.37	20.77	18.69	15.37
95	56.61	42.91	37.46	34.48	29.26	22.63	20.12	18.10	14.88
98	54.88	41.60	36.31	33.43	28.36	21.94	19.50	17.55	14.42
101	53.25	40.36	35.23	32.44	27.52	21.29	18.92	17.03	14.00
104	51.71	39.20	34.21	31.50	26.73	20.67	18.37	16.54	13.59

NOTE:

WOOD BUCK . INSTALLED BY OTHERS. ARCHIECT OR ENGINEER OF RECORD MUST VERIFY WOOD BUCK CAPACITY TO SUSTAIN LOADS BEING IMPOSED BY WINDOW AND MULLION SYSTEM.

APPROVED AS COMPLYING WITH THE SOUTH FLORIDA BUILDING CODE
DATE February 21, 2002
BY
PRODUCT CONTROL DIVIS.ON
BUILDING CODE COMPLIANCE OFFICE
ACCEPTANCE NO. 01-0910.02

1/17/02

Florida P.E. No. 37337
SAUL PEREZ
STRUCTURAL ENGINEER
18461 NW 88nd Place.
MIAMI, FL. 33015 (305) 558-0688

REVISIONS
1-17-02

MULLION DETAILS
KD Windows
3705 SHARKS PLACE - RIVIERA BEACH, FLORIDA 33404

DATE 1/2/97
SCALE FULL
DRAWN MCB
PROJECT 9608
DRAWING NUMBER 5

TYPE "C" ANCHOR

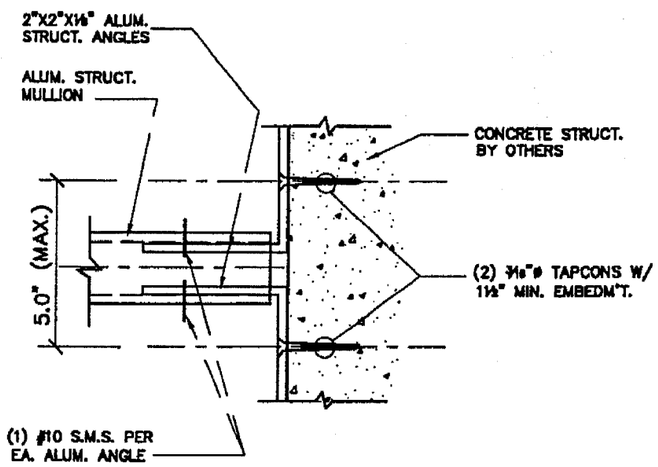

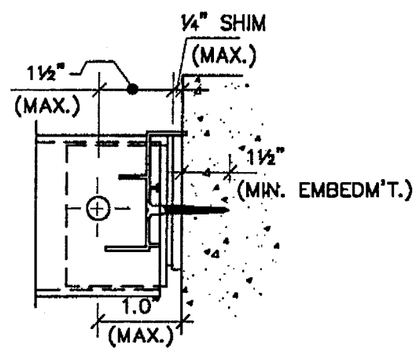

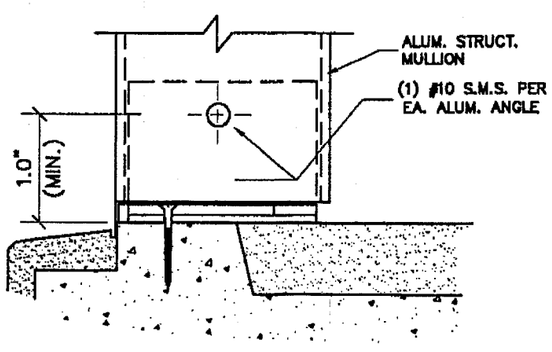

Anchor Design Load Pressure (psf)
Type C : 2 - 3/16" TAP-CON Screws per End in Concrete

Tributary Width (in.)	Mullion Length (in.)								
	38.375	50.625	58	63	74.25	96	108	120	146
20	136.05	103.13	90.02	82.87	70.32	54.39	48.34	43.51	35.76
23	118.31	89.68	78.28	72.06	61.15	47.29	42.04	37.83	31.10
26	104.66	79.33	69.25	63.75	54.09	41.84	37.19	33.47	27.51
29	93.83	71.13	62.08	57.15	48.50	37.51	33.34	30.01	24.66
32	85.03	64.46	56.26	51.80	43.95	33.99	30.21	27.19	22.35
35	77.75	58.93	51.44	47.36	40.18	31.08	27.62	24.86	20.43
38	71.61	54.28	47.38	43.62	37.01	28.62	25.44	22.90	18.82
41	66.37	50.31	43.91	40.43	34.30	26.53	23.58	21.22	17.44
44	61.84	46.88	40.92	37.67	31.96	24.72	21.97	19.78	16.25
47	57.90	43.89	38.31	35.27	29.92	23.14	20.57	18.51	15.22
50	54.42	41.25	36.01	33.15	28.13	21.75	19.34	17.40	14.30
53	51.34	38.92	33.97	31.27	26.54	20.52	18.24	16.42	13.49
56	48.59	36.83	32.15	29.60	25.11	19.42	17.27	15.54	12.77
59	46.12	34.96	30.51	28.09	23.84	18.44	16.39	14.75	12.12
62	43.89	33.27	29.04	26.73	22.68	17.54	15.59	14.04	11.54
65	41.86	31.73	27.70	25.50	21.64	16.73	14.87	13.39	11.00
68	40.02	30.33	26.48	24.37	20.68	16.00	14.22	12.80	10.52
71	38.33	29.05	25.36	23.34	19.81	15.32	13.62	12.26	10.07
74	36.77	27.87	24.33	22.40	19.00	14.70	13.07	11.76	9.67
77	35.34	26.79	23.38	21.53	18.26	14.13	12.56	11.30	9.29
80	34.01	25.78	22.50	20.72	17.58	13.60	12.09	10.88	8.94
83	32.78	24.85	21.69	19.97	16.94	13.11	11.65	10.48	8.62
86	31.64	23.98	20.93	19.27	16.35	12.65	11.24	10.12	8.32
89	30.57	23.18	20.23	18.62	15.80	12.22	10.86	9.78	8.04
92	29.58	22.42	19.57	18.02	15.29	11.82	10.51	9.46	7.77
95	28.64	21.71	18.95	17.45	14.80	11.45	10.18	9.16	7.53
98	27.77	21.05	18.37	16.91	14.35	11.10	9.87	8.88	7.30
101	26.94	20.42	17.83	16.41	13.92	10.77	9.57	8.62	7.08
104	26.16	19.83	17.31	15.94	13.52	10.46	9.30	8.37	6.88

NOTE:

WOOD BUCK INSTALLED BY OTHERS. ARCHIECT OR ENGINEER OF RECORD MUST VERIFY WOOD BUCK CAPACITY TO SUSTAIN LOADS BEING IMPOSED BY WINDOW AND MULLION SYSTEM.

APPROVED AS COMPLYING WITH THE SOUTH FLORIDA BUILDING CODE
DATE February 21, 2007
BY
PRODUCT CONTROL DIVISION
BUILDING CODE COMPLIANCE OFFICE
ACCEPTANCE NO. 01-0910.02

Saul Perez 1/17/02

Florida P.E. No. 37337
SAUL PEREZ
STRUCTURAL ENGINEER
18461 NW 68nd Place.
MIAMI, FL. 33015 (305) 828-0688

REVISIONS
1-17-02

MULLION DETAILS
KD Windows
3705 SHARES PLACE - RIVIERA BEACH, FLORIDA 33404

DATE 1/3/97
SCALE FULL
DRAWN MCB
PROJECT 9608
DRAWING NUMBER 6

TYPE "D" ANCHOR

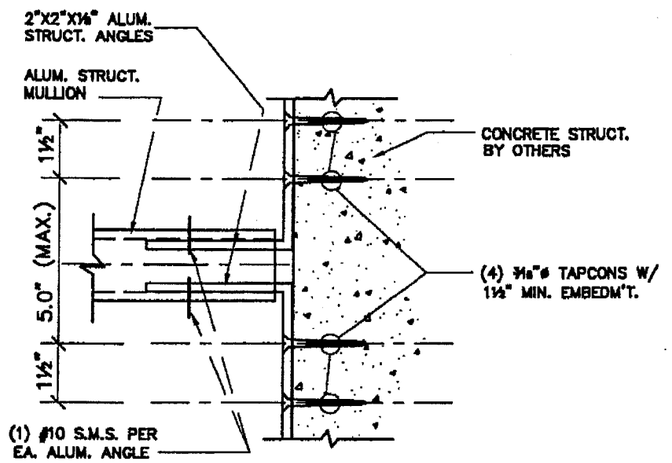

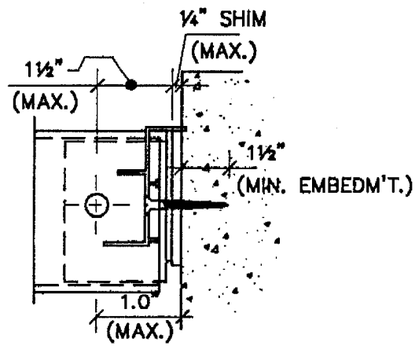

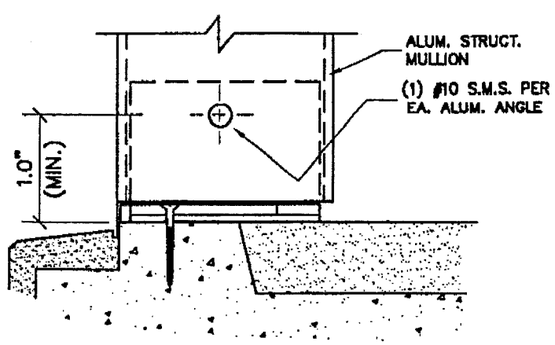

Anchor Design Load Pressure (psf)

Type D : 4 - 3/16" TAP-CON Screws per End in Concrete

Tributary Width (in.)	Mullion Length (in.)								
	38.375	50.625	58	63	74.25	96	108	120	146
20	272.11	206.27	180.04	165.75	140.64	108.77	96.69	87.02	71.52
23	236.62	179.36	156.55	144.13	122.29	94.59	84.08	75.67	62.19
26	209.31	158.67	138.49	127.50	108.18	83.67	74.37	66.94	55.02
29	187.66	142.25	124.16	114.31	96.99	75.02	66.68	60.01	49.33
32	170.07	128.92	112.52	103.59	87.90	67.98	60.43	54.39	44.70
35	155.49	117.87	102.88	94.71	80.36	62.16	55.25	49.72	40.87
38	143.22	108.56	94.76	87.24	74.02	57.25	50.89	45.80	37.64
41	132.74	100.62	87.82	80.85	68.60	53.06	47.16	42.45	34.89
44	123.69	93.76	81.84	75.34	63.93	49.44	43.95	39.55	32.51
47	115.79	87.77	76.61	70.53	59.84	46.29	41.14	37.03	30.43
50	108.84	82.51	72.02	66.30	56.25	43.51	38.67	34.81	28.61
53	102.68	77.84	67.94	62.55	53.07	41.05	36.49	32.84	26.99
56	97.18	73.67	64.30	59.20	50.23	38.85	34.53	31.08	25.54
59	92.24	69.92	61.03	56.19	47.67	36.87	32.78	29.50	24.24
62	87.78	66.54	58.08	53.47	45.37	35.09	31.19	28.07	23.07
65	83.73	63.47	55.40	51.00	43.27	33.47	29.75	26.77	22.01
68	80.03	60.67	52.95	48.75	41.36	31.99	28.44	25.59	21.04
71	76.65	58.10	50.71	46.69	39.62	30.64	27.24	24.51	20.15
74	73.54	55.75	48.66	44.80	38.01	29.40	26.13	23.52	19.33
77	70.68	53.58	46.76	43.05	36.53	28.25	25.11	22.60	18.58
80	68.03	51.57	45.01	41.44	35.16	27.19	24.17	21.75	17.88
83	65.57	49.70	43.38	39.94	33.89	26.21	23.30	20.97	17.23
86	63.28	47.97	41.87	38.55	32.71	25.30	22.49	20.24	16.63
89	61.15	46.35	40.46	37.25	31.60	24.44	21.73	19.55	16.07
92	59.15	44.84	39.14	36.03	30.57	23.65	21.02	18.92	15.55
95	57.29	43.42	37.90	34.89	29.61	22.90	20.36	18.32	15.06
98	55.53	42.09	36.74	33.83	28.70	22.20	19.73	17.76	14.60
101	53.88	40.84	35.65	32.82	27.85	21.54	19.15	17.23	14.16
104	52.33	39.67	34.62	31.87	27.05	20.92	18.59	16.73	13.75

NOTE:

WOOD BUCK INSTALLED BY OTHERS. ARCHIECT OR ENGINEER OF RECORD MUST VERIFY WOOD BUCK CAPACITY TO SUSTAIN LOADS BEING IMPOSED BY WINDOW AND MULLION SYSTEM.

APPROVED AS COMPLYING WITH THE SOUTH FLORIDA BUILDING CODE
DATE February 21, 2007
BY
PRODUCT CONTROL DIVISION
BUILDING CODE COMPLIANCE OFFICE
ACCEPTANCE NO. 01-0910.02

1/17/02

Florida P.E. No. 37337
SAUL PEREZ
STRUCTURAL ENGINEER
16401 NW 68nd Place,
MIAMI, FL. 33015 (305) 558-0588

REVISIONS
1-17-02

MULLION DETAILS
KD Windows
3705 SHARES PLACE - RIVIERA BEACH, FLORIDA 33404

DATE 1/2/97
SCALE FULL
DRAWN
PROJECT 9608
DRAWING NUMBER 7

TYPE "E" ANCHOR

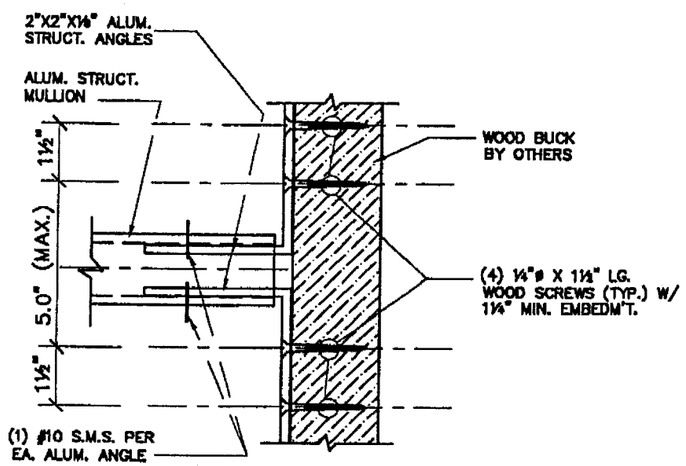

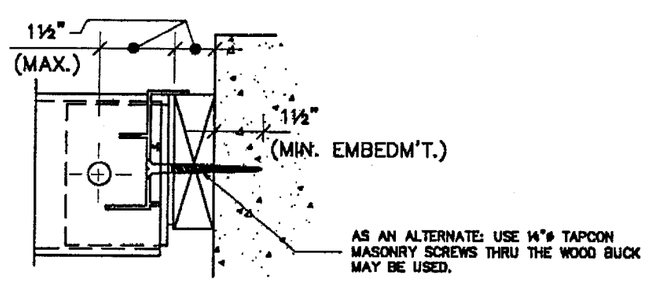

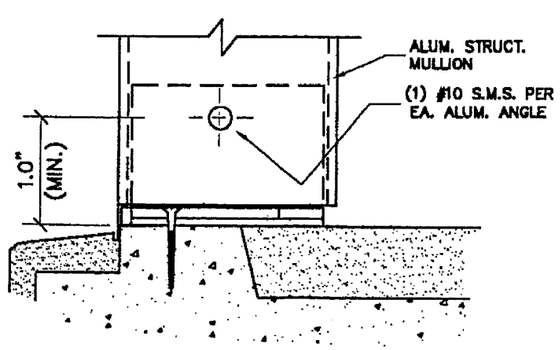

Anchor Design Load Pressure (psf)									
Type E : 4 - 1/4" Wood Screws per End in wood buck									
(4 - 1/4" Tap-Con Screws per End thru Wood Buck)									
Tributary	Mullion Length (in.)								
Width (in.)	38.375	50.625	58	63	74.25	96	108	120	146
20	342.52	259.64	226.63	208.64	177.03	136.92	121.71	109.54	90.03
23	297.85	225.77	197.07	181.43	153.94	119.06	105.83	95.25	78.29
26	263.48	199.72	174.33	160.49	136.18	105.32	93.62	84.26	69.25
29	236.22	179.06	156.29	143.89	122.09	94.43	83.94	75.54	62.09
32	214.08	162.28	141.64	130.40	110.64	85.58	76.07	68.46	56.27
35	195.73	148.37	129.50	119.22	101.16	78.24	69.55	62.59	51.45
38	180.28	136.65	119.28	109.81	93.17	72.06	64.06	57.65	47.38
41	167.08	126.65	110.55	101.78	86.36	66.79	59.37	53.43	43.92
44	155.69	118.02	103.01	94.84	80.47	62.24	55.32	49.79	40.92
47	145.75	110.49	96.44	88.78	75.33	58.26	51.79	46.61	38.31
50	137.01	103.86	90.65	83.46	70.81	54.77	48.68	43.81	36.01
53	129.25	97.98	85.52	78.73	66.80	51.67	45.93	41.33	33.97
56	122.33	92.73	80.94	74.51	63.22	48.90	43.47	39.12	32.15
59	116.11	88.01	76.82	70.73	60.01	46.41	41.26	37.13	30.52
62	110.49	83.76	73.11	67.30	57.11	44.17	39.26	35.33	29.04
65	105.39	79.89	69.73	64.20	54.47	42.13	37.45	33.70	27.70
68	100.74	76.36	66.65	61.36	52.07	40.27	35.80	32.22	26.48
71	96.49	73.14	63.84	58.77	49.87	38.57	34.28	30.86	25.36
74	92.57	70.17	61.25	56.39	47.85	37.01	32.89	29.60	24.33
77	88.97	67.44	58.86	54.19	45.98	35.56	31.61	28.45	23.38
80	85.63	64.91	56.66	52.16	44.26	34.23	30.43	27.38	22.51
83	82.54	62.56	54.61	50.27	42.66	32.99	29.33	26.39	21.69
86	79.66	60.38	52.70	48.52	41.17	31.84	28.30	25.47	20.94
89	76.97	58.35	50.93	46.89	39.78	30.77	27.35	24.61	20.23
92	74.46	56.44	49.27	45.36	38.48	29.77	26.46	23.81	19.57
95	72.11	54.66	47.71	43.92	37.27	28.83	25.62	23.06	18.95
98	69.90	52.99	46.25	42.58	36.13	27.94	24.84	22.35	18.37
101	67.83	51.41	44.88	41.31	35.06	27.11	24.10	21.69	17.83
104	65.87	49.93	43.58	40.12	34.04	26.33	23.41	21.06	17.31
107	64.02	48.53	42.36	39.00	33.09	25.59	22.75	20.47	16.83
110	62.28	47.21	41.20	37.93	32.19	24.89	22.13	19.92	16.37
113	60.62	45.95	40.11	36.93	31.33	24.23	21.54	19.39	15.93
116	59.06	44.77	39.07	35.97	30.52	23.61	20.98	18.89	15.52
119	57.57	43.64	38.09	35.07	29.75	23.01	20.45	18.41	15.13
122	56.15	42.56	37.15	34.20	29.02	22.45	19.95	17.96	14.76
125	54.80	41.54	36.26	33.38	28.32	21.91	19.47	17.53	14.40
128	53.52	40.57	35.41	32.60	27.66	21.39	19.02	17.12	14.07
131	52.29	39.64	34.60	31.85	27.03	20.90	18.58	16.72	13.74
134	51.12	38.75	33.82	31.14	26.42	20.44	18.17	16.35	13.44
137	50.00	37.90	33.08	30.46	25.84	19.99	17.77	15.99	13.14
140	48.93	37.09	32.38	29.81	25.29	19.56	17.39	15.65	12.86

NOTE:

WOOD BUCK INSTALLED BY OTHERS. ARCHIECT OR ENGINEER OF RECORD MUST VERIFY WOOD BUCK CAPACITY TO SUSTAIN LOADS BEING IMPOSED BY WINDOW AND MULLION SYSTEM.

APPROVED AS COMPLYING WITH THE SOUTH FLORIDA BUILDING CODE
DATE February 21, 2002
BY
PRODUCT CONTROL DIVISION
BUILDING CODE COMPLIANCE OFFICE
ACCEPTANCE NO. 01-0910.02

1/17/02

Florida P.E. No. 37337
SAUL PEREZ
STRUCTURAL ENGINEER
16451 NW 82nd Place,
MIAMI, FL. 33015 (305) 825-0888

REVISIONS
1-17-02

MULLION DETAILS
KD Windows
3705 SHARES PLACE - RIVIERA BEACH, FLORIDA 33404

DATE 1/29/97
SCALE FULL
DRAWN MCHH
PROJECT 9608
DRAWING NUMBER 8

TYPE "F" ANCHOR

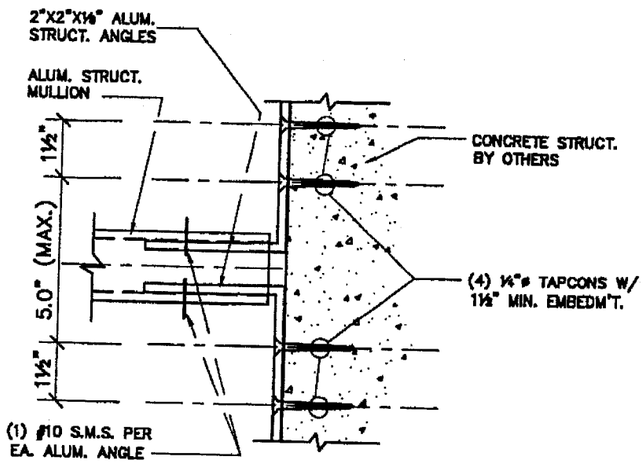

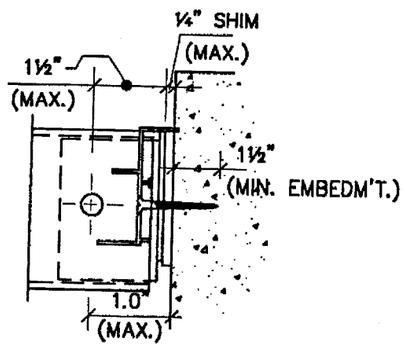

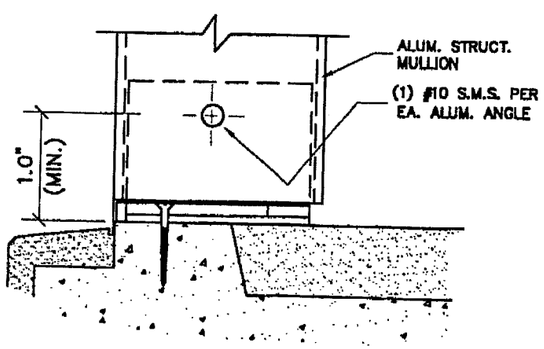

Anchor Design Load Pressure (psf)

Type F : 4 - 1/4" TAP-CON Screws per End in Concrete

Tributary Width (in.)	Mullion Length (in.)								
	38.375	50.625	58	63	74.25	96	108	120	146
20	370.15	280.58	244.90	225.47	191.31	147.96	131.52	118.37	97.29
23	321.87	243.98	212.96	196.06	166.35	128.66	114.37	102.93	84.60
26	284.73	215.83	188.39	173.44	147.16	113.82	101.17	91.05	74.84
29	255.27	193.50	168.90	155.49	131.93	102.04	90.71	81.63	67.10
32	231.34	175.36	153.07	140.92	119.57	92.48	82.20	73.98	60.81
35	211.51	160.33	139.95	128.84	109.32	84.55	75.16	67.64	55.59
38	194.81	147.67	128.90	118.67	100.69	77.88	69.22	62.30	51.21
41	180.56	136.87	119.47	109.98	93.32	72.18	64.16	57.74	47.46
44	168.25	127.54	111.32	102.49	86.96	67.26	59.78	53.80	44.22
47	157.51	119.40	104.21	95.94	81.41	62.96	55.97	50.37	41.40
50	148.06	112.23	97.96	90.19	76.52	59.19	52.61	47.35	38.92
53	139.68	105.88	92.42	85.08	72.19	55.84	49.63	44.67	36.71
56	132.20	100.21	87.47	80.52	68.32	52.84	46.97	42.28	34.75
59	125.47	95.11	83.02	76.43	64.85	50.16	44.58	40.13	32.98
62	119.40	90.51	79.00	72.73	61.71	47.73	42.43	38.18	31.38
65	113.89	86.33	75.36	69.37	58.86	45.53	40.47	36.42	29.94
68	108.87	82.52	72.03	66.31	56.27	43.52	38.68	34.81	28.61
71	104.27	79.04	68.99	63.51	53.89	41.68	37.05	33.34	27.41
74	100.04	75.83	66.19	60.94	51.70	39.99	35.55	31.99	26.29
77	96.14	72.88	63.61	58.56	49.69	38.43	34.16	30.75	25.27
80	92.54	70.15	61.23	56.37	47.83	36.99	32.88	29.59	24.32
83	89.19	67.61	59.01	54.33	46.10	35.65	31.69	28.52	23.44
86	86.08	65.25	56.95	52.43	44.49	34.41	30.59	27.53	22.63
89	83.18	63.05	55.03	50.67	42.99	33.25	29.56	26.60	21.86
92	80.47	61.00	53.24	49.01	41.59	32.17	28.59	25.73	21.15
95	77.93	59.07	51.56	47.47	40.27	31.15	27.69	24.92	20.48
98	75.54	57.26	49.98	46.01	39.04	30.20	26.84	24.16	19.86
101	73.30	55.56	48.50	44.65	37.88	29.30	26.04	23.44	19.27
104	71.18	53.96	47.10	43.36	36.79	28.45	25.29	22.76	18.71
107	69.19	52.45	45.78	42.14	35.76	27.66	24.58	22.13	18.19
110	67.30	51.01	44.53	40.99	34.78	26.90	23.91	21.52	17.69
113	65.51	49.66	43.35	39.91	33.86	26.19	23.28	20.95	17.22
116	63.82	48.38	42.22	38.87	32.98	25.51	22.68	20.41	16.77
119	62.21	47.16	41.16	37.89	32.15	24.87	22.10	19.89	16.35
122	60.68	46.00	40.15	36.96	31.36	24.26	21.56	19.40	15.95
125	59.22	44.89	39.18	36.07	30.61	23.67	21.04	18.94	15.57
128	57.84	43.84	38.27	35.23	29.89	23.12	20.55	18.50	15.20
131	56.51	42.84	37.39	34.42	29.21	22.59	20.08	18.07	14.85
134	55.25	41.88	36.55	33.65	28.55	22.08	19.63	17.67	14.52
137	54.04	40.96	35.75	32.91	27.93	21.60	19.20	17.28	14.20
140	52.88	40.08	34.99	32.21	27.33	21.14	18.79	16.91	13.90

NOTE:

WOOD BUCK INSTALLED BY OTHERS. ARCHIECT OR ENGINEER OF RECORD MUST VERIFY WOOD BUCK CAPACITY TO SUSTAIN LOADS BEING IMPOSED BY WINDOW AND MULLION SYSTEM.

APPROVED AS COMPLYING WITH THE SOUTH FLORIDA BUILDING CODE
DATE February 21, 2002
BY
PRODUCT CONTROL DIVISION
BUILDING CODE COMPLIANCE OFFICE
ACCEPTANCE NO. 01-0910.02

1/17/02

Florida P.E. No. 37337
SAUL PEREZ
STRUCTURAL ENGINEER
10461 NW 82nd Place,
MIAMI, FL. 33018
(305) 828-0588

REVISIONS
1-17-02

MULLION DETAILS
KD Windows
3705 SHARES PLACE - RIVIERA BEACH, FLORIDA 33404

DATE 1/24/97
SCALE FULL
DRAWN MCDB
PROJECT 9608
DRAWING NUMBER 9