MIAMI-DADE COUNTY, FLORIDA
METRO-DADE FLAGLER BUILDING

BUILDING CODE COMPLIANCE OFFICE
METRO-DADE FLAGLER BUILDING
140 WEST FLAGLER STREET, SUITE 1603
MIAMI, FLORIDA 33130-1563
(305) 375-2901 FAX (305) 375-2908

CONTRACTOR LICENSING SECTION
(305) 375-2527 FAX (305) 375-2558

CONTRACTOR ENFORCEMENT DIVISION
(305) 375-2966 FAX (305) 375-2908

PRODUCT CONTROL DIVISION
(305) 375-2902 FAX (305) 372-6339

PRODUCT CONTROL NOTICE OF ACCEPTANCE

K.D. Windows, Inc.
3705 Shares Place
Riviera Beach ,FL 33404

Your application for Notice of Acceptance (NOA) of:
Aluminum Tube Mullions with Steel Reinforcement
under Chapter 8 of the Code of Miami-Dade County governing the use of Alternate Materials and Types of Construction, and completely described herein, has been recommended for acceptance by the Miami-Dade County Building Code Compliance Office (BCCO) under the conditions specified herein.

This NOA shall not be valid after the expiration date stated below. BCCO reserves the right to secure this product or material at any time from a jobsite or manufacturer's plant for quality control testing. If this product or material fails to perform in the approved manner, BCCO may revoke, modify, or suspend the use of such product or material immediately. BCCO reserves the right to revoke this approval, if it is determined by BCCO that this product or material fails to meet the requirements of the South Florida Building Code.

The expense of such testing will be incurred by the manufacturer.

ACCEPTANCE NO.: 01-0910.10
EXPIRES: 07/23/2005

Raul Rodriguez
Chief Product Control Division

THIS IS THE COVERSHEET, SEE ADDITIONAL PAGES FOR SPECIFIC AND GENERAL CONDITIONS
BUILDING CODE & PRODUCT REVIEW COMMITTEE

This application for Product Approval has been reviewed by the BCCO and approved by the Building Code and Product Review Committee to be used in Miami-Dade County, Florida under the conditions set forth above.

Francisco J. Quintana, R.A.
Director
Miami-Dade County
Building Code Compliance Office

APPROVED: 10/11/2001

KD Windows, Inc.

ACCEPTANCE No.: 01-0910.10

APPROVED: October 11, 2001

EXPIRES: July 23, 2005

NOTICE OF ACCEPTANCE: SPECIFIC CONDITIONS

1. SCOPE

1.1 This renews Notice of Acceptance # 96-00418.10 (NOA), which was issued to American Window Corporation on July 23, 1997, for the approval of an aluminum mullion, as described in Section 2 of this NOA designed to comply with the South Florida Building Code (SFBC), 1994 Edition for Miami-Dade County, for the locations where the pressure requirements, as determined by SFBC Chapter 23, do not exceed the Design Pressure Rating values indicated in the approved drawings.

2. PRODUCT DESCRIPTION

2.1 The **Aluminum Mullion** and its components shall be constructed in strict compliance with the following documents: Drawing titled "Mullion Details" Sheets S1B through S3B of 9 and S4 through S9 of 9, dated 1/25/97 with revision date f 3/13/97, signed (signature date 7/7/01) and sealed by Saul Perez, P.E., bearing the Miami-Dade County Product Control approval stamp with the NOA number and approval date by the Miami-Dade County Product Control Division. These documents shall hereinafter be referred to as the approved drawings.

3. LIMITATIONS

3.1 Mullions are to be used only to support windows and/or doors, with a current NOA.

3.2 This mullion can be installed as part of an Impact Resistant System with a current NOA.

4. INSTALLATION

4.1 The aluminum mullion and its components shall be installed in strict compliance with the approved drawings.

5. LABELING

5.1 Each unit shall bear a permanent label with the manufacturer's name or logo, city, state and following statement: "Miami-Dade County Product Control Approved".

6. BUILDING PERMIT REQUIREMENTS

6.1 Application for building permit shall be accompanied by copies of the following:

6.1.1 This NOA

6.1.2 Copies of the approved drawings, as identified in Section 2 of this NOA, clearly marked to show the components selected for the proposed installation.

6.1.3 Any other documents required by the Building Official or the South Florida Building Code (SFBC) in order to properly evaluate the installation of this system.

Raul Rodriguez, Chief
Product Control Division

KD Windows, Inc.

ACCEPTANCE No.: **01-0910.10**

APPROVED: **October 11, 2001**

EXPIRES: **July 23, 2005**

NOTICE OF ACCEPTANCE: STANDARD CONDITIONS

1. Renewal of this Acceptance (approval) shall be considered after a renewal application has been filed and the original submitted documentation, including test supporting data, engineering documents, are no older than eight (8) years.

2. Any and all approved products shall be permanently labeled with the manufacturer's name, city, state, and the following statement: "Miami-Dade County Product Control Approved", or as specifically stated in the specific conditions of this Acceptance.

3. Renewals of Acceptance will not be considered if:
   a) There has been a change in the South Florida Building Code affecting the evaluation of this product and the product is not in compliance with the code changes;
   b) The product is no longer the same product (identical) as the one originally approved;
   c) If the Acceptance holder has not complied with all the requirements of this acceptance, including the correct installation of the product;
   d) The engineer who originally prepared, signed and sealed the required documentation initially submitted is no longer practicing the engineering profession.

4. Any revision or change in the materials, use, and/or manufacture of the product or process shall automatically be cause for termination of this Acceptance, unless prior written approval has been requested (through the filing of a revision application with appropriate fee) and granted by this office.

5. Any of the following shall also be grounds for removal of this Acceptance:
   a) Unsatisfactory performance of this product or process.
   b) Misuse of this Acceptance as an endorsement of any product, for sales, advertising or any other purpose.

6. The Notice of Acceptance number preceded by the words Miami-Dade County, Florida, and followed by the expiration date may be displayed in advertising literature. If any portion of the Notice of Acceptance is displayed, then it shall be done in its entirety.

7. A copy of this Acceptance as well as approved drawings and other documents, where it applies, shall be provided to the user by the manufacturer or its distributors and shall be available for inspection at the job site at all time. The engineer need not reseal the copies.

8. Failure to comply with any section of this Acceptance shall be cause for termination and removal of Acceptance.

9. This Notice of Acceptance consists of pages 1, 2 and this last page 3.

END OF THIS ACCEPTANCE

Raul Rodriguez, Chief
Product Control Division

GENERAL NOTES:

1. ARCHITECT OR ENGINEER OF RECORD SHALL CALCULATE DESIGN WIND LOADS IN ACCORDANCE WITH ASCE-7-88.
2. MUST SELECT DADE COUNTY APPROVED PRODUCT WHICH COMPLIES WITH THE DESIGN CRITERIA, AS NOTED ABOVE.
3. MUST SELECT FROM MULLION CHARTS AND ANCHOR LOAD TABLES ANGHOR TYPES WHICH MEET OR EXCEED ALL OF THE DESIGN LOADING CONDITIONS.
4. ALL ALUMINUM MULLIONS SHALL CONSIST OF 6063-T5 ALUMINUM ALLOY UNLESS OTHERWISE NOTED.
5. ALL GLAZING PRODUCTS SHALL HAVE METRO DADE PRODUCT CONTROL APPROVAL.
6. ANY ASSEMBLY CONDITION NOT DESCRIBED HEREIN SHALL REQUIRE SEPARATE ENGINEERING
7. ALL ALUMINUM INSERT ANGLES SHALL BE CUT TO FIT SNUGLY INTO THE ALUMINUN MULLIONS
8. ALL TAPCON ANCHORS SHALL DEVELOP A MINIMUM DESIGN SHEAR RESISTANCE OF 255 LBS. AND A MINIMUM DESIGN TENSION (PULL OUT) RESISTANCE OF 214 LBS
9. ALL STEEL REINFORCEMENT SHALL BE PAINTED

MULLION STRUCTURAL PROPERITIES WITH STEEL REINFORCEMENT *

MULLION SIZE	I_x	S_x
1"X2"	NOT USED	NOT USED
1"X3"	.434 IN^4	.323 IN^3
1"X4"	.969 IN^4	.526 IN^3
2"X4"	1.645 IN^4	.908 IN^3
2"X6"	3.85 IN^4	1.93 IN^3

* NOTE THESE PROPERTIES INCLUDE THE STEEL REINFORCEMENT ONLY. NO CONTRIBUTION FROM THE WINDOW FRAMES ARE INCLUDED

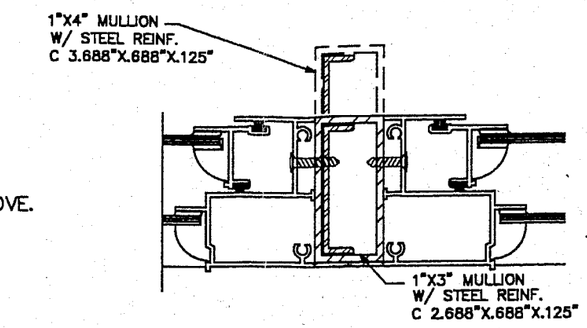

SECTION "A-A" TYPICAL FOR 1"X3" & 1"X4" REINF. MULLIONS

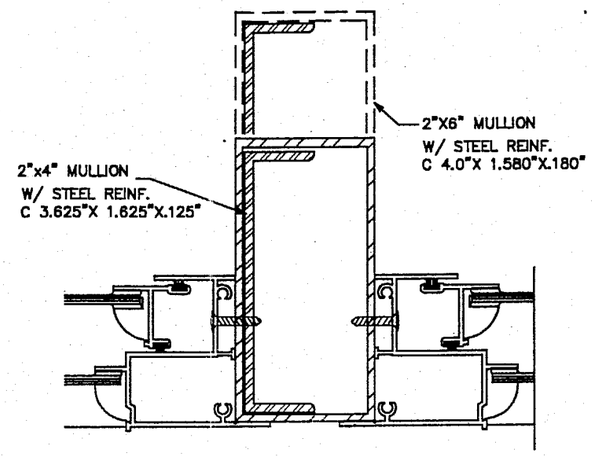

SECTION "A-A" TYPICAL FOR 2"X4" & 2"X6" REINF. MULLIONS

APPROVED AS COMPLYING WITH THE SOUTH FLORIDA BUILDING CODE
DATE Oct. 11, 2001
BY
PRODUCT CONTROL DIVISION
BUILDING CODE COMPLIANCE OFFICE
ACCEPTANCE NO. 01-0910.10

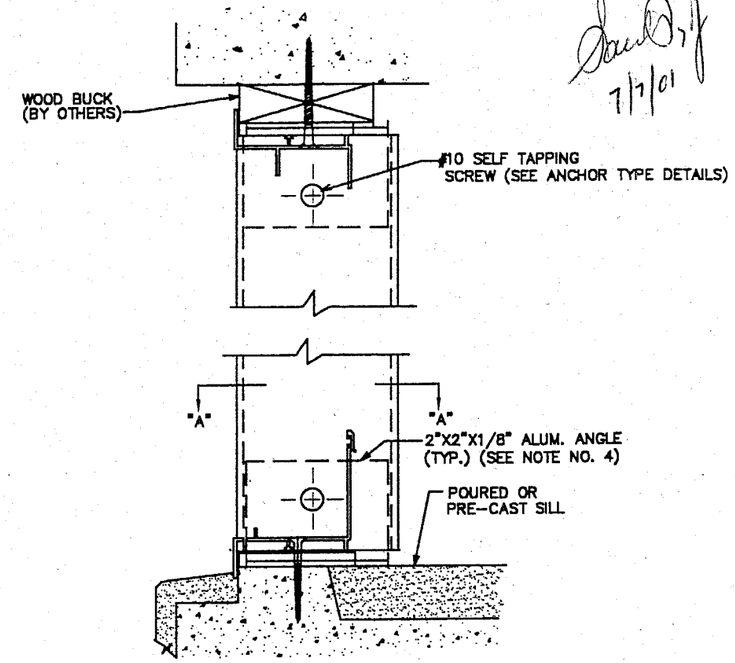

TYPICAL MULLION SECTION

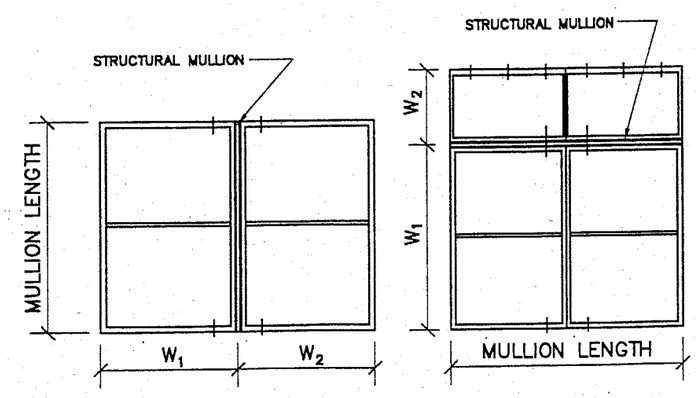

VERT. MULLIONS HORIZ. MULLIONS

TRIBUTARY WIDTH = $\frac{W_1 + W_2}{2}$

TYPICAL MULLION ELEVATION

7/7/01

Florida P.E. No. 37337

SAUL PEREZ
STRUCTURAL ENGINEER
16451 NW 88nd Place.
MIAMI, FL. 33018 (305) 655-0588

REVISIONS
3/13/97

MULLION DETAILS
KD Windows
3705 SHARES PLACE - RIVIERA BEACH, FLORIDA 33404

DATE 1/23/97
SCALE FULL
DRAWN MCB
PROJECT 9609
DRAWING NUMBER S1B
of 9

Design Load Pressure (psf) 1"x3"x1/8" thick Aluminum Mullion					
Tributary	Mullion Length (in.)				
Width (in.)	38.375	50.625	58	63	74.25
20	300.00	232.24	176.93	149.96	97.71
23	300.00	201.95	153.86	130.40	84.97
26	300.00	178.65	136.10	115.36	75.16
29	278.74	160.17	122.02	103.42	67.39
32	252.61	145.15	110.58	93.73	61.07
35	230.96	132.71	101.10	85.69	55.83
38	212.72	122.23	93.12	78.93	51.43
41	197.16	113.29	86.31	73.15	47.66
44	183.72	105.56	80.42	68.17	44.41
47	171.99	98.83	75.29	63.81	41.58
50	161.67	92.90	70.77	59.99	39.08
53	152.52	87.64	66.77	56.59	36.87
56	144.35	82.94	63.19	53.56	34.90
59	137.01	78.73	59.98	50.84	33.12
62	130.38	74.92	57.08	48.38	31.52
65	124.36	71.46	54.44	46.14	30.06
68	118.88	68.31	52.04	44.11	28.74
71	113.85	65.42	49.84	42.24	27.52
74	109.24	62.77	47.82	40.53	26.41
77	104.98	60.32	45.96	38.95	25.38
80	101.04	58.06	44.23	37.49	24.43
83	97.39	55.96	42.63	36.14	23.54
86	93.99	54.01	41.15	34.88	22.72
89	90.83	52.19	39.76	33.70	21.96
92	87.86	50.49	38.46	32.60	21.24
95	85.09	48.89	37.25	31.57	20.57
98	82.48	47.40	36.11	30.60	19.94
101	80.03	45.99	35.04	29.70	19.35
104	77.73	44.66	34.03	28.84	18.79

Design Load Pressure (psf) 1"x4"x1/8" thick Aluminum Mullion					
Tributary	Mullion Length (in.)				
Width (in.)	38.375	50.625	58	63	74.25
20	300.00	300.00	288.13	244.21	175.82
23	300.00	300.00	250.55	212.36	152.88
26	300.00	290.92	221.64	187.86	135.24
29	300.00	260.83	198.71	168.42	121.25
32	300.00	236.37	180.08	152.63	109.88
35	300.00	216.11	164.65	139.55	100.47
38	300.00	199.05	151.65	128.53	92.53
41	300.00	184.49	140.55	119.13	85.76
44	299.18	171.91	130.97	111.01	79.92
47	280.08	160.94	122.61	103.92	74.82
50	263.28	151.28	115.25	97.69	70.33
53	248.37	142.72	108.73	92.16	66.35
56	235.07	135.07	102.90	87.22	62.79
59	223.12	128.20	97.67	82.78	59.60
62	212.32	122.00	92.95	78.78	56.71
65	202.52	116.37	88.66	75.14	54.10
68	193.59	111.23	84.75	71.83	51.71
71	185.41	106.53	81.16	68.79	49.53
74	177.89	102.22	77.87	66.00	47.52
77	170.96	98.23	74.84	63.43	45.67
80	164.55	94.55	72.03	61.05	43.95
83	158.60	91.13	69.43	58.85	42.37
86	153.07	87.95	67.01	56.79	40.89
89	147.91	84.99	64.75	54.88	39.51
92	143.09	82.22	62.64	53.09	38.22
95	138.57	79.62	60.66	51.41	37.01
98	134.32	77.18	58.80	49.84	35.88
101	130.34	74.89	57.06	48.36	34.81
104	126.58	72.73	55.41	46.96	33.81

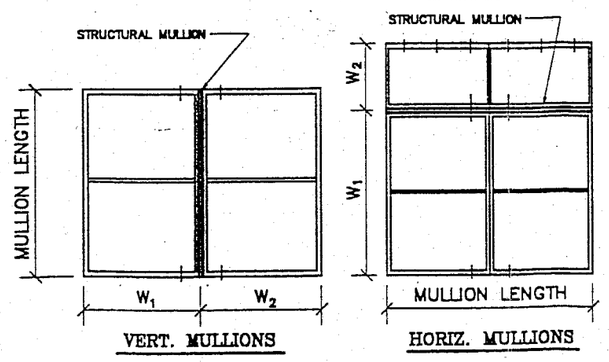

$$\text{TRIBUTARY WIDTH} = \frac{W_1 + W_2}{2}$$

TYPICAL MULLION ELEVATION

APPROVED AS COMPLYING WITH THE
SOUTH FLORIDA BUILDING CODE
DATE Oct. 11, 2001
BY:
PRODUCT CONTROL DIVISION
BUILDING CODE COMPLIANCE OFFICE
ACCEPTANCE NO. 01-0910.10

7/7/01

Florida P.E. No. 37337
SAUL PEREZ
STRUCTURAL ENGINEER
16401 NW 88nd Place,
MIAMI, FL. 33018 (305) 885-0888

REVISIONS
3/13/97

MULLION DETAIL
KD Windows
3705 SHARES PLACE - RIVIERA BEACH, FLORIDA 33404

DATE 1/23/97
SCALE FULL
DRAWN MOB
PROJECT 9609
DRAWING NUMBER S2B
SHEET 9

Design Load Pressure (psf) 2"x6"x1/8" thick Aluminum Mullion									
Tributary Width (in.)	Mullion Length (in.)								
	38.375	50.625	58	63	74.25	96	108	120	146
20	300.00	300.00	300.00	300.00	300.00	300.00	281.66	205.33	114.01
23	300.00	300.00	300.00	300.00	300.00	300.00	244.93	178.55	99.14
26	300.00	300.00	300.00	300.00	300.00	296.85	216.66	157.95	87.70
29	300.00	300.00	300.00	300.00	300.00	266.14	194.25	141.61	78.63
32	300.00	300.00	300.00	300.00	300.00	241.19	176.04	128.33	71.26
35	300.00	300.00	300.00	300.00	300.00	220.52	160.95	117.33	65.15
38	300.00	300.00	300.00	300.00	300.00	203.11	148.24	108.07	60.01
41	300.00	300.00	300.00	300.00	300.00	188.25	137.40	100.16	55.61
44	300.00	300.00	300.00	300.00	293.23	175.41	128.03	93.33	51.82
47	300.00	300.00	300.00	300.00	274.51	164.21	119.86	87.38	48.52
50	300.00	300.00	300.00	300.00	258.04	154.36	112.67	82.13	45.60
53	300.00	300.00	300.00	300.00	243.43	145.62	106.29	77.48	43.02
56	300.00	300.00	300.00	300.00	230.39	137.82	100.59	73.33	40.72
59	300.00	300.00	300.00	300.00	218.68	130.81	95.48	69.60	38.65
62	300.00	300.00	300.00	289.05	208.10	124.49	90.86	66.24	36.78
65	300.00	300.00	300.00	275.71	198.49	118.74	86.67	63.18	35.08
68	300.00	300.00	300.00	263.55	189.74	113.50	82.84	60.39	33.53
71	300.00	300.00	297.81	252.41	181.72	108.71	79.34	57.84	32.12
74	300.00	300.00	285.74	242.18	174.35	104.30	76.13	55.50	30.81
77	300.00	300.00	274.60	232.74	167.56	100.23	73.16	53.33	29.61
80	300.00	300.00	264.30	224.02	161.28	96.48	70.42	51.33	28.50
83	300.00	300.00	254.75	215.92	155.45	92.99	67.87	49.48	27.47
86	300.00	300.00	245.87	208.39	150.02	89.75	65.50	47.75	26.51
89	300.00	300.00	237.58	201.36	144.97	86.72	63.30	46.14	25.62
92	300.00	300.00	229.83	194.80	140.24	83.89	61.23	44.64	24.78
95	300.00	292.14	222.57	188.65	135.81	81.24	59.30	43.23	24.00
98	300.00	283.20	215.76	182.87	131.65	78.76	57.48	41.90	23.27
101	300.00	274.79	209.35	177.44	127.74	76.42	55.78	40.66	22.58
104	300.00	266.86	203.31	172.32	124.06	74.21	54.17	39.49	21.93

Design Load Pressure (psf) 2"x4"x1/8" thick Aluminum Mullion									
Tributary Width (in.)	Mullion Length (in.)								
	38.375	50.625	58	63	74.25	96	108	120	146
20	300.00	300.00	300.00	300.00	300.00	171.35	120.35	87.73	48.71
23	300.00	300.00	300.00	300.00	263.91	149.00	104.65	76.29	42.36
26	300.00	300.00	300.00	300.00	233.46	131.81	92.58	67.49	37.47
29	300.00	300.00	300.00	290.74	209.31	118.18	83.00	60.51	33.60
32	300.00	300.00	300.00	263.48	189.69	107.10	75.22	54.83	30.45
35	300.00	300.00	284.22	240.90	173.43	97.92	68.77	50.13	27.84
38	300.00	300.00	261.78	221.88	159.74	90.19	63.34	46.18	25.64
41	300.00	300.00	242.63	205.64	148.05	83.59	58.71	42.80	23.76
44	300.00	296.75	226.08	191.62	137.95	77.89	54.70	39.88	22.14
47	300.00	277.81	211.65	179.39	129.15	72.92	51.21	37.33	20.73
50	300.00	261.14	198.95	168.63	121.40	68.54	48.14	35.09	19.49
53	300.00	246.36	187.69	159.08	114.53	64.66	45.41	33.11	18.38
56	300.00	233.16	177.64	150.56	108.39	61.20	42.98	31.33	17.40
59	300.00	221.31	168.61	142.90	102.88	58.09	40.80	29.74	16.51
62	300.00	210.60	160.45	135.99	97.90	55.28	38.82	28.30	15.71
65	300.00	200.88	153.04	129.71	93.38	52.72	37.03	26.99	14.99
68	300.00	192.02	146.29	123.99	89.26	50.40	35.40	25.80	14.33
71	300.00	183.90	140.11	118.75	85.49	48.27	33.90	24.71	13.72
74	300.00	176.45	134.43	113.94	82.03	46.31	32.53	23.71	13.17
77	295.12	169.57	129.19	109.50	78.83	44.51	31.26	22.79	12.65
80	284.05	163.21	124.35	105.39	75.87	42.84	30.09	21.93	12.18
83	273.78	157.32	119.85	101.58	73.13	41.29	29.00	21.14	11.74
86	264.23	151.83	115.67	98.04	70.58	39.85	27.99	20.40	11.33
89	255.32	146.71	111.77	94.73	68.20	38.51	27.04	19.72	10.95
92	247.00	141.93	108.13	91.65	65.98	37.25	26.16	19.07	10.59
95	239.20	137.44	104.71	88.75	63.89	36.07	25.34	18.47	10.26
98	231.88	133.24	101.51	86.03	61.94	34.97	24.56	17.90	9.94
101	224.99	129.28	98.49	83.48	60.10	33.93	23.83	17.37	9.65
104	218.50	125.55	95.65	81.07	58.37	32.95	23.14	16.87	9.37

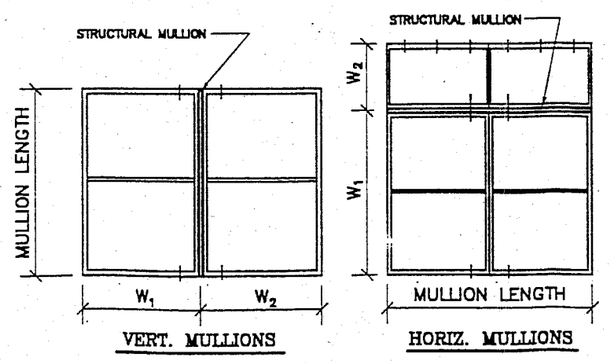

TYPICAL MULLION ELEVATION

$$\text{TRIBUTARY WIDTH} = \frac{W_1 + W_2}{2}$$

APPROVED AS COMPLYING WITH THE
SOUTH FLORIDA BUILDING CODE
DATE Oct. 11, 2001
BY
PRODUCT CONTROL DIVISION
BUILDING CODE COMPLIANCE OFFICE
ACCEPTANCE NO. 01-0910.10

7/7/01

Florida P.E. No. 37337
SAUL PEREZ
STRUCTURAL ENGINEER
18461 NW 68nd Place,
MIAMI, FL. 33015
(305) 558-0888

REVISIONS
3/13/97

MULLION DETAIL
KD Windows
3705 SHARES PLACE - RIVIERA BEACH, FLORIDA 33404

DATE 1/2/97
SCALE FULL
DRAWN MOB
PROJECT 9609
DRAWING NUMBER S3B
SHEET 9 OF 9

TYPE "A" ANCHOR

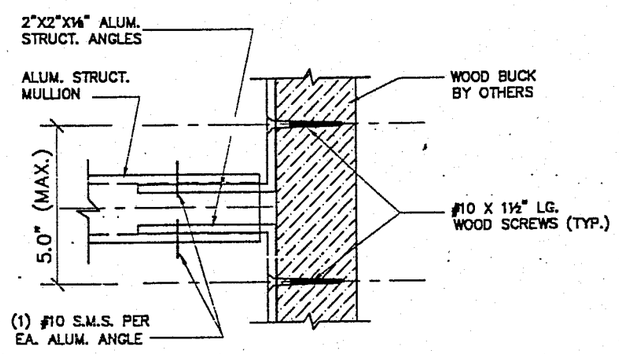

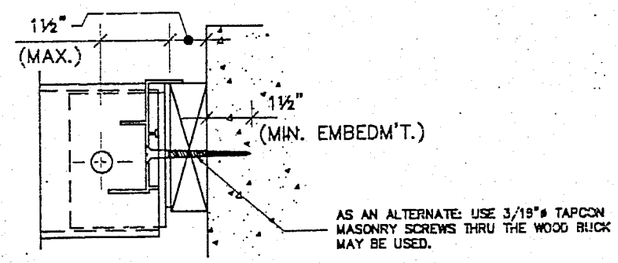

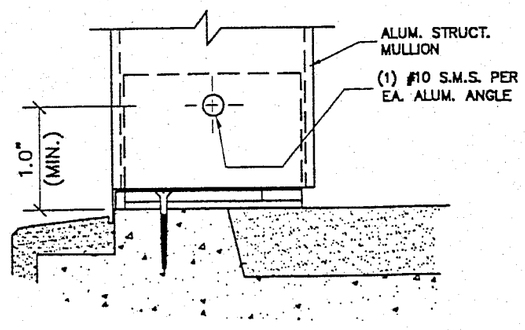

Anchor Design Load Pressure (psf)

Type A : 2 - 3/16" Wood Screws per End in wood buck

(2-3/16" Tap-Con Screws per end thru wood buck)

Tributary Width (in.)	Mullion Length (in.)								
	38.375	50.625	58	63	74.25	96	108	120	146
20	134.45	101.92	88.96	81.90	69.49	53.75	47.77	43.00	35.34
23	116.92	88.62	77.36	71.22	60.43	46.74	41.54	37.39	30.73
26	103.42	78.40	68.43	63.00	53.45	41.34	36.75	33.07	27.18
29	92.73	70.29	61.35	56.48	47.92	37.07	32.95	29.65	24.37
32	84.03	63.70	55.60	51.19	43.43	33.59	29.86	26.87	22.09
35	76.83	58.24	50.83	46.80	39.71	30.71	27.30	24.57	20.19
38	70.76	53.64	46.82	43.10	36.57	28.29	25.14	22.63	18.60
41	65.59	49.72	43.39	39.95	33.90	26.22	23.30	20.97	17.24
44	61.11	46.33	40.44	37.23	31.59	24.43	21.72	19.54	16.06
47	57.21	43.37	37.85	34.85	29.57	22.87	20.33	18.30	15.04
50	53.78	40.77	35.58	32.76	27.80	21.50	19.11	17.20	14.14
53	50.74	38.46	33.57	30.91	26.22	20.28	18.03	16.23	13.34
56	48.02	36.40	31.77	29.25	24.82	19.19	17.06	15.36	12.62
59	45.58	34.55	30.16	27.76	23.56	18.22	16.19	14.58	11.98
62	43.37	32.88	28.70	26.42	22.42	17.34	15.41	13.87	11.40
65	41.37	31.36	27.37	25.20	21.38	16.54	14.70	13.23	10.87
68	39.54	29.98	26.16	24.09	20.44	15.81	14.05	12.65	10.39
71	37.87	28.71	25.06	23.07	19.57	15.14	13.46	12.11	9.95
74	36.34	27.55	24.04	22.13	18.78	14.53	12.91	11.62	9.55
77	34.92	26.47	23.11	21.27	18.05	13.96	12.41	11.17	9.18
80	33.61	25.48	22.24	20.47	17.37	13.44	11.94	10.75	8.83
83	32.40	24.56	21.44	19.73	16.74	12.95	11.51	10.36	8.52
86	31.27	23.70	20.69	19.05	16.16	12.50	11.11	10.00	8.22
89	30.21	22.90	19.99	18.40	15.62	12.08	10.74	9.66	7.94
92	29.23	22.16	19.34	17.80	15.11	11.68	10.39	9.35	7.68
95	28.31	21.46	18.73	17.24	14.63	11.31	10.06	9.05	7.44
98	27.44	20.80	18.15	16.71	14.18	10.97	9.75	8.77	7.21
101	26.62	20.18	17.62	16.22	13.76	10.64	9.46	8.51	7.00
104	25.86	19.60	17.11	15.75	13.36	10.34	9.19	8.27	6.80

NOTE:

WOOD BUCK INSTALLED BY OTHERS. ARCHIECT OR ENGINEER OF RECORD MUST VERIFY WOOD BUCK CAPACITY TO SUSTAIN LOADS BEING IMPOSED BY WINDOW AND MULLION SYSTEM.

APPROVED AS COMPLYING WITH THE SOUTH FLORIDA BUILDING CODE
DATE Oct. 11, 2001
BY
PRODUCT CONTROL DIVISION
BUILDING CODE COMPLIANCE OFFICE
ACCEPTANCE NO. 01-0910.10

Saul Perez 7/7/01

Florida P.E. No. 37337
SAUL PEREZ
STRUCTURAL ENGINEER
16451 NW 82nd Place,
MIAMI, FL. 33016 (305) 558-0588

REVISIONS
3/13/97

MULLION DETAILS

KD Windows
3705 SHORES PLACE - RIVIERA BEACH, FLORIDA 33404

DATE 1/2/9
SCALE FUL
DRAWN MC
PROJECT
9601

DRAWING NUMBER S4
of 9

TYPE "B" ANCHOR

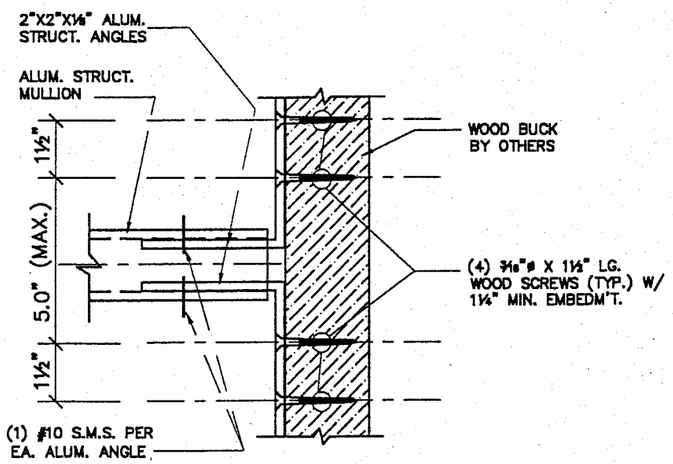

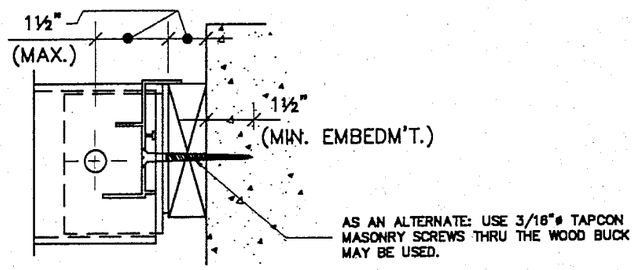

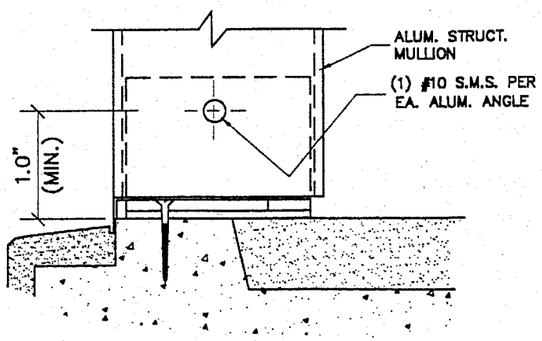

Anchor Design Load Pressure (psf)

Type B : 4 - 3/16" Wood Screws per End in wood buck

(4 - 3/16" Tap-Con Screws per End thru Wood Buck)

Tributary Width (in.)	Mullion Length (in.)								
	38.375	50.625	58	63	74.25	96	108	120	146
20	268.90	203.84	177.92	163.80	138.98	107.49	95.55	85.99	70.68
23	233.83	177.25	154.71	142.43	120.85	93.47	83.09	74.78	61.46
26	206.85	156.80	136.86	126.00	106.91	82.69	73.50	66.15	54.37
29	185.45	140.58	122.70	112.96	95.85	74.13	65.90	59.31	48.74
32	168.07	127.40	111.20	102.37	86.86	67.18	59.72	53.75	44.17
35	153.66	116.48	101.67	93.60	79.42	61.42	54.60	49.14	40.39
38	141.53	107.28	93.64	86.21	73.15	56.57	50.29	45.26	37.20
41	131.17	99.43	86.79	79.90	67.79	52.44	46.61	41.95	34.48
44	122.23	92.65	80.87	74.45	63.17	48.86	43.43	39.09	32.13
47	114.43	86.74	75.71	69.70	59.14	45.74	40.66	36.59	30.08
50	107.56	81.53	71.17	65.52	55.59	43.00	38.22	34.40	28.27
53	101.47	76.92	67.14	61.81	52.45	40.56	36.06	32.45	26.67
56	96.04	72.80	63.54	58.50	49.64	38.39	34.12	30.71	25.24
59	91.15	69.10	60.31	55.52	47.11	36.44	32.39	29.15	23.96
62	86.74	65.75	57.39	52.84	44.83	34.67	30.82	27.74	22.80
65	82.74	62.72	54.74	50.40	42.76	33.07	29.40	26.46	21.75
68	79.09	59.95	52.33	48.18	40.88	31.62	28.10	25.29	20.79
71	75.75	57.42	50.12	46.14	39.15	30.28	26.92	24.22	19.91
74	72.68	55.09	48.09	44.27	37.56	29.05	25.82	23.24	19.10
77	69.85	52.94	46.21	42.54	36.10	27.92	24.82	22.34	18.36
80	67.23	50.96	44.48	40.95	34.74	26.87	23.89	21.50	17.67
83	64.80	49.12	42.87	39.47	33.49	25.90	23.02	20.72	17.03
86	62.54	47.40	41.38	38.09	32.32	25.00	22.22	20.00	16.44
89	60.43	45.81	39.98	36.81	31.23	24.16	21.47	19.32	15.88
92	58.46	44.31	38.68	35.61	30.21	23.37	20.77	18.69	15.37
95	56.61	42.91	37.46	34.48	29.26	22.63	20.12	18.10	14.88
98	54.88	41.60	36.31	33.43	28.36	21.94	19.50	17.55	14.42
101	53.25	40.36	35.23	32.44	27.52	21.29	18.92	17.03	14.00
104	51.71	39.20	34.21	31.50	26.73	20.67	18.37	16.54	13.59

NOTE:

WOOD BUCK . INSTALLED BY OTHERS. ARCHIECT OR ENGINEER OF RECORD MUST VERIFY WOOD BUCK CAPACITY TO SUSTAIN LOADS BEING IMPOSED BY WINDOW AND MULLION SYSTEM.

APPROVED AS COMPLYING WITH THE SOUTH FLORIDA BUILDING CODE
DATE Oct. 11, 2001
BY
PRODUCT CONTROL DIVISION
BUILDING CODE COMPLIANCE OFFICE
ACCEPTANCE NO. 01-0910.10

Saul Ap. 7/7/01

Florida P.E. No. 37337
SAUL PEREZ
STRUCTURAL ENGINEER
18461 NW 68nd Place.
MIAMI, FL. 33015
(305) 558-0588

REVISIONS
3/13/97

MULLION DETAILS

KD Windows

3705 SHARES PLACE - RIVIERA BEACH, FLORIDA 33404

DATE
SCALE
DRAWN
PROJECT
9607

DRAWING NUMBER
S5
9

TYPE "C" ANCHOR

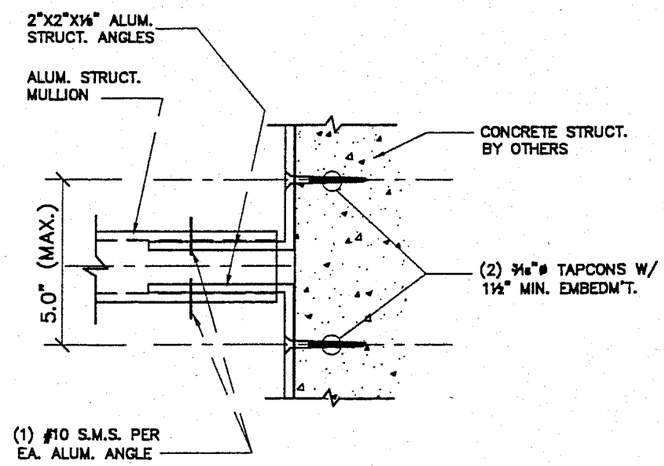

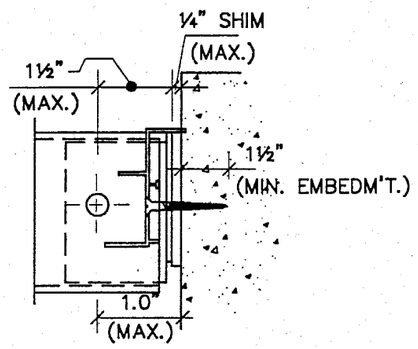

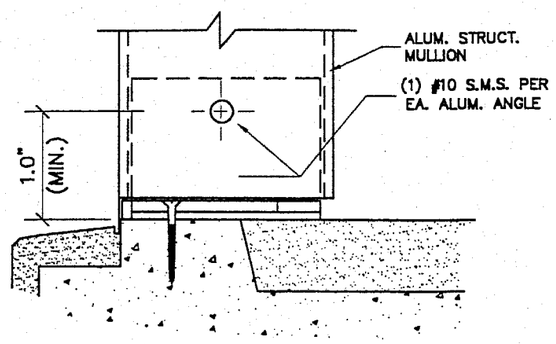

Anchor Design Load Pressure (psf)

Type C : 2 - 3/16" TAP-CON Screws per End in Concrete

Tributary Width (in.)	Mullion Length (in.)								
	38.375	50.625	58	63	74.25	96	108	120	146
20	136.05	103.13	90.02	82.87	70.32	54.39	48.34	43.51	35.76
23	118.31	89.68	78.28	72.06	61.15	47.29	42.04	37.83	31.10
26	104.66	79.33	69.25	63.75	54.09	41.84	37.19	33.47	27.51
29	93.83	71.13	62.08	57.15	48.50	37.51	33.34	30.01	24.66
32	85.03	64.46	56.26	51.80	43.95	33.99	30.21	27.19	22.35
35	77.75	58.93	51.44	47.36	40.18	31.08	27.62	24.86	20.43
38	71.61	54.28	47.38	43.62	37.01	28.62	25.44	22.90	18.82
41	66.37	50.31	43.91	40.43	34.30	26.53	23.58	21.22	17.44
44	61.84	46.88	40.92	37.67	31.96	24.72	21.97	19.78	16.25
47	57.90	43.89	38.31	35.27	29.92	23.14	20.57	18.51	15.22
50	54.42	41.25	36.01	33.15	28.13	21.75	19.34	17.40	14.30
53	51.34	38.92	33.97	31.27	26.54	20.52	18.24	16.42	13.49
56	48.59	36.83	32.15	29.60	25.11	19.42	17.27	15.54	12.77
59	46.12	34.96	30.51	28.09	23.84	18.44	16.39	14.75	12.12
62	43.89	33.27	29.04	26.73	22.68	17.54	15.59	14.04	11.54
65	41.86	31.73	27.70	25.50	21.64	16.73	14.87	13.39	11.00
68	40.02	30.33	26.48	24.37	20.68	16.00	14.22	12.80	10.52
71	38.33	29.05	25.36	23.34	19.81	15.32	13.62	12.26	10.07
74	36.77	27.87	24.33	22.40	19.00	14.70	13.07	11.76	9.67
77	35.34	26.79	23.38	21.53	18.26	14.13	12.56	11.30	9.29
80	34.01	25.78	22.50	20.72	17.58	13.60	12.09	10.88	8.94
83	32.78	24.85	21.69	19.97	16.94	13.11	11.65	10.48	8.62
86	31.64	23.98	20.93	19.27	16.35	12.65	11.24	10.12	8.32
89	30.57	23.18	20.23	18.62	15.80	12.22	10.86	9.78	8.04
92	29.58	22.42	19.57	18.02	15.29	11.82	10.51	9.46	7.77
95	28.64	21.71	18.95	17.45	14.80	11.45	10.18	9.16	7.53
98	27.77	21.05	18.37	16.91	14.35	11.10	9.87	8.88	7.30
101	26.94	20.42	17.83	16.41	13.92	10.77	9.57	8.62	7.08
104	26.16	19.83	17.31	15.94	13.52	10.46	9.30	8.37	6.88

NOTE:

WOOD BUCK INSTALLED BY OTHERS. ARCHIECT OR ENGINEER OF RECORD MUST VERIFY WOOD BUCK CAPACITY TO SUSTAIN LOADS BEING IMPOSED BY WINDOW AND MULLION SYSTEM.

APPROVED AS COMPLYING WITH THE SOUTH FLORIDA BUILDING CODE
DATE Oct. 11, 2001
BY
PRODUCT CONTROL DIVISION
BUILDING CODE COMPLIANCE OFFICE
ACCEPTANCE NO. 01-0910.10

7/7/01

Florida P.E. No. 37537
SAUL PEREZ
STRUCTURAL ENGINEER
10461 NW 88nd Place.
MIAMI, FL. 33016
(305) 885-0588

REVISIONS
3/13/97

MULLION DETAILS
KD Windows
3705 SHARES PLACE - RIVIERA BEACH, FLORIDA 33404

DATE	12/97
SCALE	FULL
DRAWN	MOB
PROJECT	9607
DRAWING NUMBER	S6
SHEET	9

TYPE "D" ANCHOR

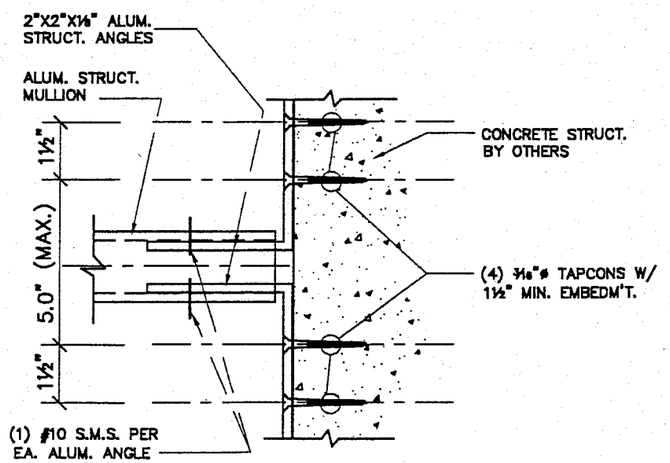

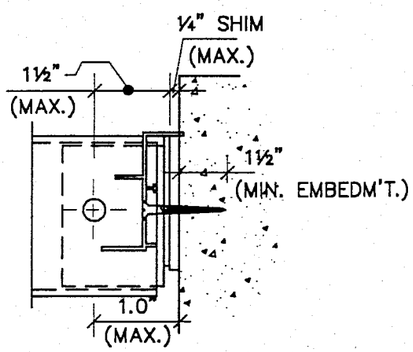

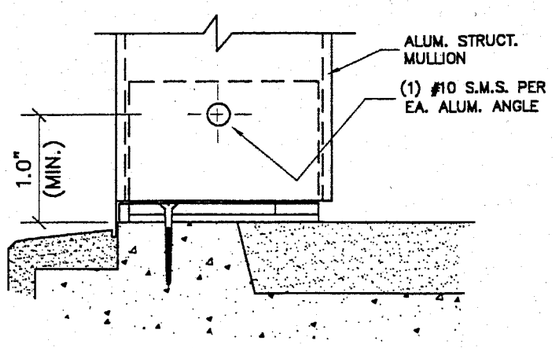

Anchor Design Load Pressure (psf)

Type D : 4 - 3/16" TAP-CON Screws per End in Concrete

Tributary Width (in.)	Mullion Length (in.)								
	38.375	50.625	58	63	74.25	96	108	120	146
20	272.11	206.27	180.04	165.75	140.64	108.77	96.69	87.02	71.52
23	236.62	179.36	156.55	144.13	122.29	94.59	84.08	75.67	62.19
26	209.31	158.67	138.49	127.50	108.18	83.67	74.37	66.94	55.02
29	187.66	142.25	124.16	114.31	96.99	75.02	66.68	60.01	49.33
32	170.07	128.92	112.52	103.59	87.90	67.98	60.43	54.39	44.70
35	155.49	117.87	102.88	94.71	80.36	62.16	55.25	49.72	40.87
38	143.22	108.56	94.76	87.24	74.02	57.25	50.89	45.80	37.64
41	132.74	100.62	87.82	80.85	68.60	53.06	47.16	42.45	34.89
44	123.69	93.76	81.84	75.34	63.93	49.44	43.95	39.55	32.51
47	115.79	87.77	76.61	70.53	59.84	46.29	41.14	37.03	30.43
50	108.84	82.51	72.02	66.30	56.25	43.51	38.67	34.81	28.61
53	102.68	77.84	67.94	62.55	53.07	41.05	36.49	32.84	26.99
56	97.18	73.67	64.30	59.20	50.23	38.85	34.53	31.08	25.54
59	92.24	69.92	61.03	56.19	47.67	36.87	32.78	29.50	24.24
62	87.78	66.54	58.08	53.47	45.37	35.09	31.19	28.07	23.07
65	83.73	63.47	55.40	51.00	43.27	33.47	29.75	26.77	22.01
68	80.03	60.67	52.95	48.75	41.36	31.99	28.44	25.59	21.04
71	76.65	58.10	50.71	46.69	39.62	30.64	27.24	24.51	20.15
74	73.54	55.75	48.66	44.80	38.01	29.40	26.13	23.52	19.33
77	70.68	53.58	46.76	43.05	36.53	28.25	25.11	22.60	18.58
80	68.03	51.57	45.01	41.44	35.16	27.19	24.17	21.75	17.88
83	65.57	49.70	43.38	39.94	33.89	26.21	23.30	20.97	17.23
86	63.28	47.97	41.87	38.55	32.71	25.30	22.49	20.24	16.63
89	61.15	46.35	40.46	37.25	31.60	24.44	21.73	19.55	16.07
92	59.15	44.84	39.14	36.03	30.57	23.65	21.02	18.92	15.55
95	57.29	43.42	37.90	34.89	29.61	22.90	20.36	18.32	15.06
98	55.53	42.09	36.74	33.83	28.70	22.20	19.73	17.76	14.60
101	53.88	40.84	35.65	32.82	27.85	21.54	19.15	17.23	14.16
104	52.33	39.67	34.62	31.87	27.05	20.92	18.59	16.73	13.75

NOTE:

WOOD BUCK INSTALLED BY OTHERS. ARCHIECT OR ENGINEER OF RECORD MUST VERIFY WOOD BUCK CAPACITY TO SUSTAIN LOADS BEING IMPOSED BY WINDOW AND MULLION SYSTEM.

APPROVED AS COMPLYING WITH THE SOUTH FLORIDA BUILDING CODE
DATE Oct. 11, 2001
BY
PRODUCT CONTROL DIVISION
BUILDING CODE COMPLIANCE OFFICE
ACCEPTANCE NO. 01-0910.10

Saul Perez 7/7/01

Florida P.E. No. 37337
SAUL PEREZ
STRUCTURAL ENGINEER
10401 NW 89nd Place.
MIAMI, FL. 33018 (800) 000-0000

REVISIONS
3/13/97

MULLION DETAILS
KD Windows
3705 SHARES PLACE - RIVIERA BEACH, FLORIDA 33404

DATE 1/2/97
SCALE FULL
DRAWN MCG
PROJECT 9607

DRAWING NUMBER S7 of 9

TYPE "E" ANCHOR

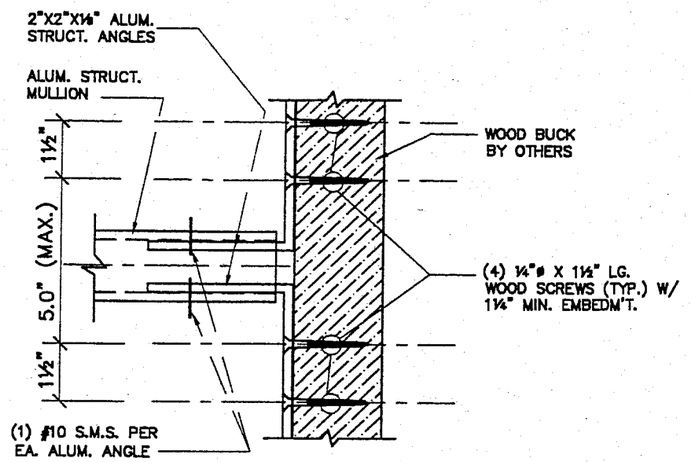

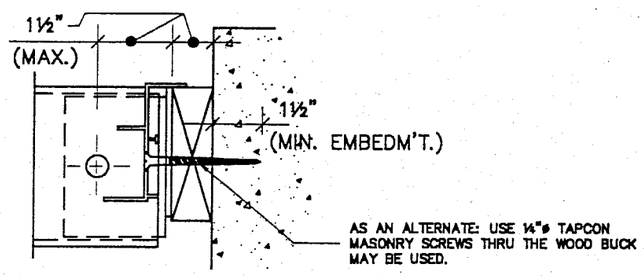

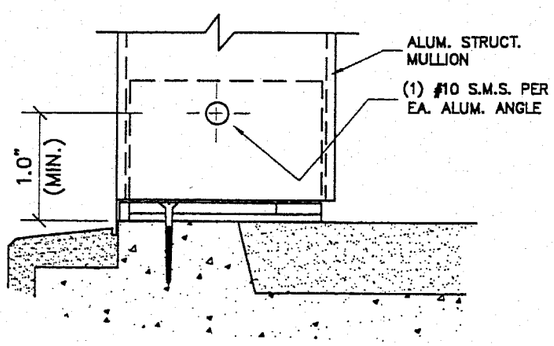

Anchor Design Load Pressure (psf)									
Type E : 4 - 1/4" Wood Screws per End in wood buck									
(4 - 1/4" Tap-Con Screws per End thru Wood Buck)									
Tributary	Mullion Length (in.)								
Width (in.)	38.375	50.625	58	63	74.25	96	108	120	146
20	342.52	259.64	226.63	208.64	177.03	136.92	121.71	109.54	90.03
23	297.85	225.77	197.07	181.43	153.94	119.06	105.83	95.25	78.29
26	263.48	199.72	174.33	160.49	136.18	105.32	93.62	84.26	69.25
29	236.22	179.06	156.29	143.89	122.09	94.43	83.94	75.54	62.09
32	214.08	162.28	141.64	130.40	110.64	85.58	76.07	68.46	56.27
35	195.73	148.37	129.50	119.22	101.16	78.24	69.55	62.59	51.45
38	180.28	136.65	119.28	109.81	93.17	72.06	64.06	57.65	47.38
41	167.08	126.65	110.55	101.78	86.36	66.79	59.37	53.43	43.92
44	155.69	118.02	103.01	94.84	80.47	62.24	55.32	49.79	40.92
47	145.75	110.49	96.44	88.78	75.33	58.26	51.79	46.61	38.31
50	137.01	103.86	90.65	83.46	70.81	54.77	48.68	43.81	36.01
53	129.25	97.98	85.52	78.73	66.80	51.67	45.93	41.33	33.97
56	122.33	92.73	80.94	74.51	63.22	48.90	43.47	39.12	32.15
59	116.11	88.01	76.82	70.73	60.01	46.41	41.26	37.13	30.52
62	110.49	83.76	73.11	67.30	57.11	44.17	39.26	35.33	29.04
65	105.39	79.89	69.73	64.20	54.47	42.13	37.45	33.70	27.70
68	100.74	76.36	66.65	61.36	52.07	40.27	35.80	32.22	26.48
71	96.49	73.14	63.84	58.77	49.87	38.57	34.28	30.86	25.36
74	92.57	70.17	61.25	56.39	47.85	37.01	32.89	29.60	24.33
77	88.97	67.44	58.86	54.19	45.98	35.56	31.61	28.45	23.38
80	85.63	64.91	56.66	52.16	44.26	34.23	30.43	27.38	22.51
83	82.54	62.56	54.61	50.27	42.66	32.99	29.33	26.39	21.69
86	79.66	60.38	52.70	48.52	41.17	31.84	28.30	25.47	20.94
89	76.97	58.35	50.93	46.89	39.78	30.77	27.35	24.61	20.23
92	74.46	56.44	49.27	45.36	38.48	29.77	26.46	23.81	19.57
95	72.11	54.66	47.71	43.92	37.27	28.83	25.62	23.06	18.95
98	69.90	52.99	46.25	42.58	36.13	27.94	24.84	22.35	18.37
101	67.83	51.41	44.88	41.31	35.06	27.11	24.10	21.69	17.83
104	65.87	49.93	43.58	40.12	34.04	26.33	23.41	21.06	17.31
107	64.02	48.53	42.36	39.00	33.09	25.59	22.75	20.47	16.83
110	62.28	47.21	41.20	37.93	32.19	24.89	22.13	19.92	16.37
113	60.62	45.95	40.11	36.93	31.33	24.23	21.54	19.39	15.93
116	59.06	44.77	39.07	35.97	30.52	23.61	20.98	18.89	15.52
119	57.57	43.64	38.09	35.07	29.75	23.01	20.45	18.41	15.13
122	56.15	42.56	37.15	34.20	29.02	22.45	19.95	17.96	14.76
125	54.80	41.54	36.26	33.38	28.32	21.91	19.47	17.53	14.40
128	53.52	40.57	35.41	32.60	27.66	21.39	19.02	17.12	14.07
131	52.29	39.64	34.60	31.85	27.03	20.90	18.58	16.72	13.74
134	51.12	38.75	33.82	31.14	26.42	20.44	18.17	16.35	13.44
137	50.00	37.90	33.08	30.46	25.84	19.99	17.77	15.99	13.14
140	48.93	37.09	32.38	29.81	25.29	19.56	17.39	15.65	12.86

NOTE:

WOOD BUCK INSTALLED BY OTHERS.
ARCHIECT
OR ENGINEER OF RECORD MUST VERIFY WOOD BUCK CAPACITY TO SUSTAIN LOADS BEING IMPOSED BY WINDOW AND MULLION SYSTEM.

APPROVED AS COMPLYING WITH THE SOUTH FLORIDA BUILDING CODE
DATE Oct. 11, 2001
BY
PRODUCT CONTROL DIVISION
BUILDING CODE COMPLIANCE OFFICE
ACCEPTANCE NO. 01-0910.10

7/7/01

Florida P.E. No. 37337
SAUL PEREZ
STRUCTURAL ENGINEER
18451 NW 68nd Place,
MIAMI, FL. 33015
(305) 558-0588

REVISIONS
3/13/97

MULLION DETAILS
KD Windows
3705 SHARES PLACE - RIVIERA BEACH, FLORIDA 33404

DATE	1/2/97
SCALE	FULL
DRAWN	MCB
PROJECT	9607
DRAWING NUMBER	S8
SHEET	9

TYPE "F" ANCHOR

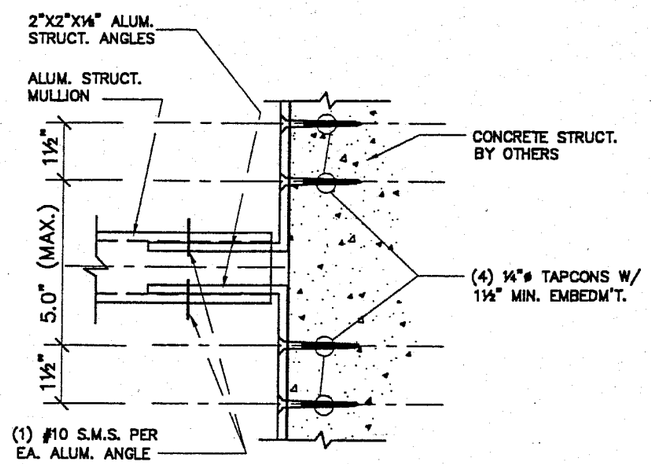

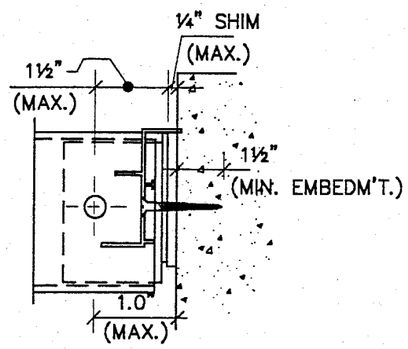

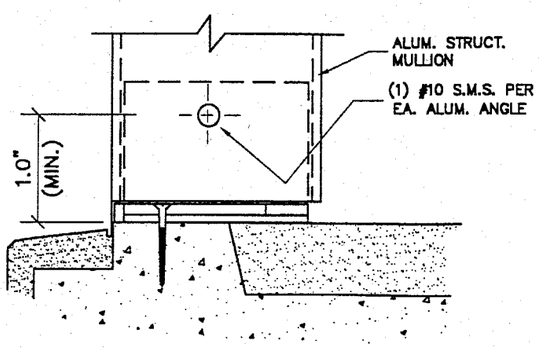

Anchor Design Load Pressure (psf)

Type F : 4 - 1/4" TAP-CON Screws per End in Concrete

Tributary Width (in.)	Mullion Length (in.)								
	38.375	50.625	58	63	74.25	96	108	120	146
20	370.15	280.58	244.90	225.47	191.31	147.96	131.52	118.37	97.29
23	321.87	243.98	212.96	196.06	166.35	128.66	114.37	102.93	84.60
26	284.73	215.83	188.39	173.44	147.16	113.82	101.17	91.05	74.84
29	255.27	193.50	168.90	155.49	131.93	102.04	90.71	81.63	67.10
32	231.34	175.36	153.07	140.92	119.57	92.48	82.20	73.98	60.81
35	211.51	160.33	139.95	128.84	109.32	84.55	75.16	67.64	55.59
38	194.81	147.67	128.90	118.67	100.69	77.88	69.22	62.30	51.21
41	180.56	136.87	119.47	109.98	93.32	72.18	64.16	57.74	47.46
44	168.25	127.54	111.32	102.49	86.96	67.26	59.78	53.80	44.22
47	157.51	119.40	104.21	95.94	81.41	62.96	55.97	50.37	41.40
50	148.06	112.23	97.96	90.19	76.52	59.19	52.61	47.35	38.92
53	139.68	105.88	92.42	85.08	72.19	55.84	49.63	44.67	36.71
56	132.20	100.21	87.47	80.52	68.32	52.84	46.97	42.28	34.75
59	125.47	95.11	83.02	76.43	64.85	50.16	44.58	40.13	32.98
62	119.40	90.51	79.00	72.73	61.71	47.73	42.43	38.18	31.38
65	113.89	86.33	75.36	69.37	58.86	45.53	40.47	36.42	29.94
68	108.87	82.52	72.03	66.31	56.27	43.52	38.68	34.81	28.61
71	104.27	79.04	68.99	63.51	53.89	41.68	37.05	33.34	27.41
74	100.04	75.83	66.19	60.94	51.70	39.99	35.55	31.99	26.29
77	96.14	72.88	63.61	58.56	49.69	38.43	34.16	30.75	25.27
80	92.54	70.15	61.23	56.37	47.83	36.99	32.88	29.59	24.32
83	89.19	67.61	59.01	54.33	46.10	35.65	31.69	28.52	23.44
86	86.08	65.25	56.95	52.43	44.49	34.41	30.59	27.53	22.63
89	83.18	63.05	55.03	50.67	42.99	33.25	29.56	26.60	21.86
92	80.47	61.00	53.24	49.01	41.59	32.17	28.59	25.73	21.15
95	77.93	59.07	51.56	47.47	40.27	31.15	27.69	24.92	20.48
98	75.54	57.26	49.98	46.01	39.04	30.20	26.84	24.16	19.86
101	73.30	55.56	48.50	44.65	37.88	29.30	26.04	23.44	19.27
104	71.18	53.96	47.10	43.36	36.79	28.45	25.29	22.76	18.71
107	69.19	52.45	45.78	42.14	35.76	27.66	24.58	22.13	18.19
110	67.30	51.01	44.53	40.99	34.78	26.90	23.91	21.52	17.69
113	65.51	49.66	43.35	39.91	33.86	26.19	23.28	20.95	17.22
116	63.82	48.38	42.22	38.87	32.98	25.51	22.68	20.41	16.77
119	62.21	47.16	41.16	37.89	32.15	24.87	22.10	19.89	16.35
122	60.68	46.00	40.15	36.96	31.36	24.26	21.56	19.40	15.95
125	59.22	44.89	39.18	36.07	30.61	23.67	21.04	18.94	15.57
128	57.84	43.84	38.27	35.23	29.89	23.12	20.55	18.50	15.20
131	56.51	42.84	37.39	34.42	29.21	22.59	20.08	18.07	14.85
134	55.25	41.88	36.55	33.65	28.55	22.08	19.63	17.67	14.52
137	54.04	40.96	35.75	32.91	27.93	21.60	19.20	17.28	14.20
140	52.88	40.08	34.99	32.21	27.33	21.14	18.79	16.91	13.90

NOTE:

WOOD BUCK INSTALLED BY OTHERS. ARCHIECT OR ENGINEER OF RECORD MUST VERIFY WOOD BUCK CAPACITY TO SUSTAIN LOADS BEING IMPOSED BY WINDOW AND MULLION SYSTEM.

APPROVED AS COMPLYING WITH THE SOUTH FLORIDA BUILDING CODE
DATE Oct. 11, 2001
BY
PRODUCT CONTROL DIVISION
BUILDING CODE COMPLIANCE OFFICE
ACCEPTANCE NO. 01-0910.10

7/7/01

Florida P.E. No. 37337
SAUL PEREZ
STRUCTURAL ENGINEER
16451 NW 68nd Place.
MIAMI, FL. 33015
(305) 685-0688

REVISIONS
3/13/97

MULLION DETAILS
KD Windows
3705 SHARES PLACE - RIVIERA BEACH, FLORIDA 33404

DATE	1/23/97
SCALE	FULL
DRAWN	MCGB
PROJECT	9607
DRAWING NUMBER	S9
SHEET	of 9