MIAMI-DADE

MIAMI-DADE COUNTY, FLORIDA
METRO-DADE FLAGLER BUILDING

BUILDING CODE COMPLIANCE OFFICE
METRO-DADE FLAGLER BUILDING
140 WEST FLAGLER STREET, SUITE 1603
MIAMI, FLORIDA 33130-1563
(305) 375-2901 FAX (305) 375-2908

CONTRACTOR LICENSING SECTION
(305) 375-2527 FAX (305) 375-2558

CONTRACTOR ENFORCEMENT DIVISION
(305) 375-2966 FAX (305) 375-2908

PRODUCT CONTROL DIVISION
(305) 375-2902 FAX (305) 372-6339

PRODUCT CONTROL NOTICE OF ACCEPTANCE

Therma-Tru Corporation
1687 Woodlands Drive
Maumee ,OH 43537

Your application for Notice of Acceptance (NOA) of:
"Fiber Classic & Smooth Star" Inswing Residential Ins.Fiberglass Door
under Chapter 8 of the Code of Miami-Dade County governing the use of Alternate Materials and Types of Construction, and completely described herein, has been recommended for acceptance by the Miami-Dade County Building Code Compliance Office (BCCO) under the conditions specified herein.

This NOA shall not be valid after the expiration date stated below. BCCO reserves the right to secure this product or material at any time from a jobsite or manufacturer's plant for quality control testing. If this product or material fails to perform in the approved manner, BCCO may revoke, modify, or suspend the use of such product or material immediately. BCCO reserves the right to revoke this approval, if it is determined by BCCO that this product or material fails to meet the requirements of the South Florida Building Code.

The expense of such testing will be incurred by the manufacturer.

ACCEPTANCE NO.: 01-0912.04
EXPIRES: 09/29/2006

Raul Rodriguez
Chief Product Control Division

THIS IS THE COVERSHEET, SEE ADDITIONAL PAGES FOR SPECIFIC AND GENERAL CONDITIONS
BUILDING CODE & PRODUCT REVIEW COMMITTEE

This application for Product Approval has been reviewed by the BCCO and approved by the Building Code and Product Review Committee to be used in Miami-Dade County, Florida under the conditions set forth above.

Francisco J. Quintana, R.A.
Director
Miami-Dade County
Building Code Compliance Office

APPROVED: 11/29/2001

NOTICE OF ACCEPTANCE: SPECIFIC CONDITIONS

1. SCOPE

1.1 This **renews** Notice of Acceptance (NOA) No. **00-0928.02**, which was issued on October 19, 2000. It renews the approval of a fiberglass inswing door, as described in Section 2 of this NOA, designed to comply with the South Florida Building Code (SFBC), 1994 Edition for Miami-Dade County, for the locations where the pressure requirements, as determined by SFBC Chapter 23, do not exceed the Design Pressure Rating values indicated in the approved drawings.

2. PRODUCT DESCRIPTION

2.1 The **Series "Fiberclassic" & "Smooth Star" Inswing Residential Insulated Fiberglass Door** and its components shall be constructed in strict compliance with the following document: Drawing No **B0122**, Sheets 1 through 3 of 3, titled "titled "6/0 x 6/8 Fiber-Classic Inswing Moderate Climate Patio," prepared by manufacturer., dated 3/31/97 and revised on 2/3/99, bearing the Miami-Dade County Product Control renewal stamp with the NOA number and expiration date by the Miami-Dade County Product Control Division. This document shall hereinafter be referred to as the approved drawings.

3. LIMITATIONS

3.1 This approval applies to single unit applications of pair of doors and single door only, as shown in approved drawings. Single door units shall include all components described in the active leaf of this approval.

4. INSTALLATION

4.1 The inswing residential insulated fiberglass door and its components shall be installed in strict compliance with the approved drawings.

4.2 Hurricane protection system (shutters): The installation of these units **will require** a hurricane protective system.

5. LABELING

5.1 Each unit shall bear a permanent label with the manufacturer's name or logo, city, state and following statement: "Miami-Dade County Product Control Approved".

6. BUILDING PERMIT REQUIREMENTS

6.1 Application for building permit shall be accompanied by copies of the following:

6.1.1 This Notice of Acceptance

6.1.2 Duplicate copies of the approved drawings, as identified in Section 2 of this Notice of Acceptance, clearly marked to show the components selected for the proposed installation.

6.1.3 Any other documents required by the Building Official or the South Florida Building Code (SFBC) in order to properly evaluate the installation of this system.

Raul Rodriguez, Chief
Product Control Division

Therma-Tru Corporation

ACCEPTANCE No.: **01-0912.04**

APPROVED: **November 29, 2001**

EXPIRES: **September 29, 2006**

NOTICE OF ACCEPTANCE: STANDARD CONDITIONS

1. Renewal of this Acceptance (approval) shall be considered after a renewal application has been filed and the original submitted documentation, including test supporting data, engineering documents, are no older than eight (8) years.

2. Any and all approved products shall be permanently labeled with the manufacturer's name, city, state, and the following statement: "Miami-Dade County Product Control Approved", or as specifically stated in the specific conditions of this Acceptance.

3. Renewals of Acceptance will not be considered if:
   a) There has been a change in the South Florida Building Code affecting the evaluation of this product and the product is not in compliance with the code changes;
   b) The product is no longer the same product (identical) as the one originally approved;
   c) If the Acceptance holder has not complied with all the requirements of this acceptance, including the correct installation of the product;
   d) The engineer who originally prepared, signed and sealed the required documentation initially submitted is no longer practicing the engineering profession.

4. Any revision or change in the materials, use, and/or manufacture of the product or process shall automatically be cause for termination of this Acceptance, unless prior written approval has been requested (through the filing of a revision application with appropriate fee) and granted by this office.

5. Any of the following shall also be grounds for removal of this Acceptance:
   a) Unsatisfactory performance of this product or process.
   b) Misuse of this Acceptance as an endorsement of any product, for sales, advertising or any other purpose.

6. The Notice of Acceptance number preceded by the words Miami-Dade County, Florida, and followed by the expiration date may be displayed in advertising literature. If any portion of the Notice of Acceptance is displayed, then it shall be done in its entirety.

7. A copy of this Acceptance as well as approved drawings and other documents, where it applies, shall be provided to the user by the manufacturer or its distributors and shall be available for inspection at the job site at all time. The engineer need not reseal the copies.

8. Failure to comply with any section of this Acceptance shall be cause for termination and removal of Acceptance.

9. This Notice of Acceptance consists of pages 1, 2 and this last page 3.

END OF THIS ACCEPTANCE

Raul Rodriguez, Chief
Product Control Division

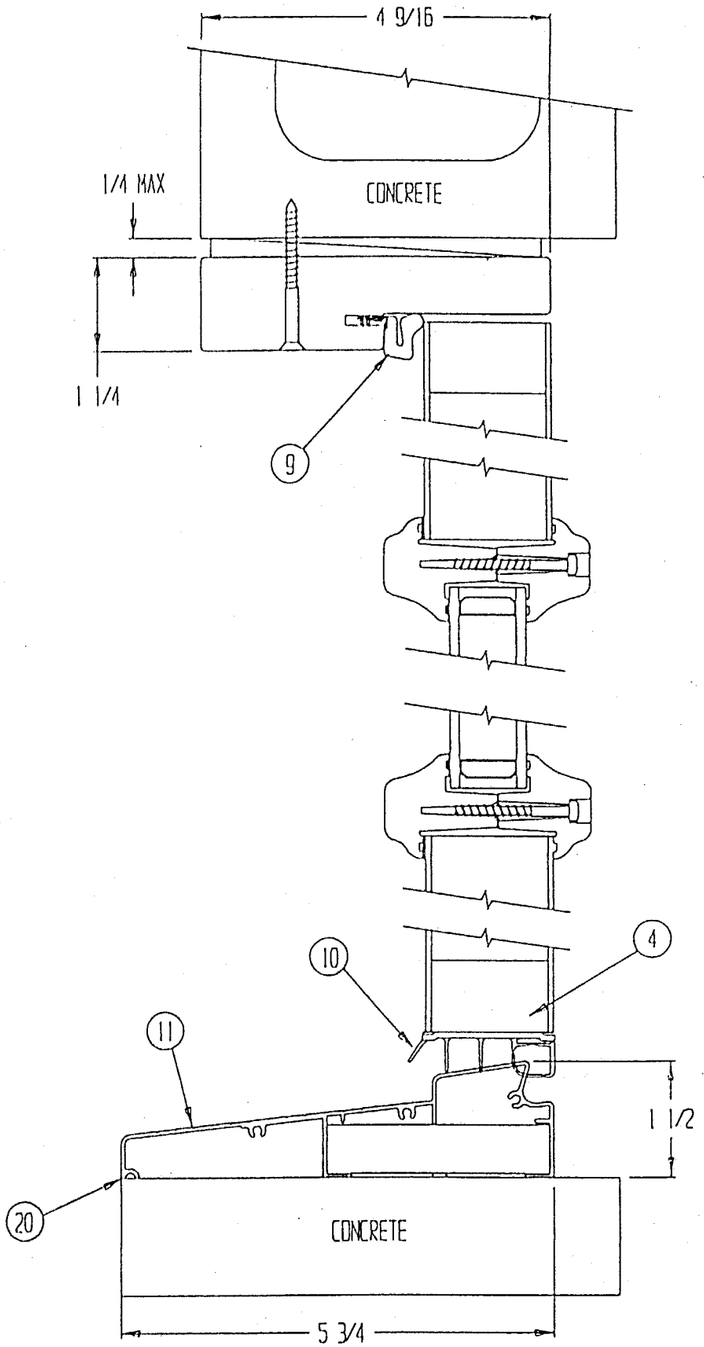

SECTION C-C

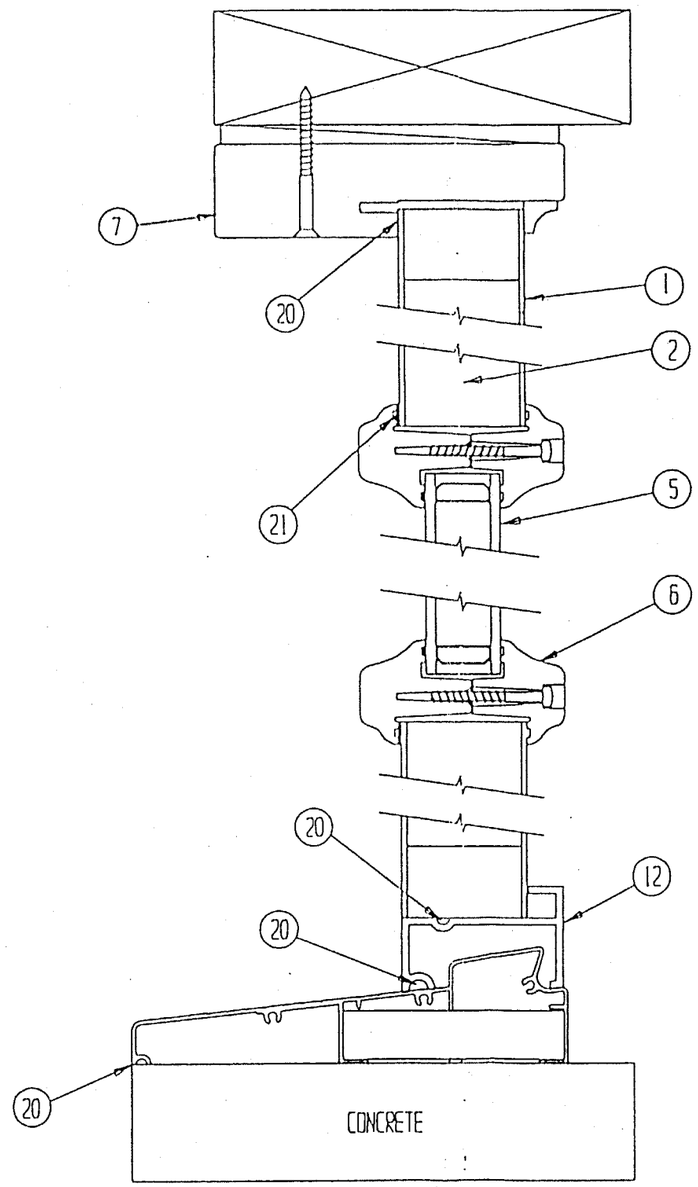

SECTION B-B

REV	DESCRIPTION	DATE
A	REVISED DWG PER BCCO PRODUCT CONTROL DIVISION	1-8-99
B	REVISED SHEET 2	2-3-99

ITEM	QTY	DESCRIPTION
26	AS REQD	COVE MOLDING
25	23	#10 X 2 1/2" SCREWS
24	2	#12 X 2 1/2" SCREWS
23	6	#10 X 3/4" SCREWS
22	1	.05 X 4' X 6' STEEL PLATE
21	AS REQD	STRUCTURAL SILICONE BEDDING COMPOUND AROUND ENTIRE PERIMETER OF LITE
20	AS REQD	SEALANT
19	2	WEATHERSEAL PADS
18	2	SECURITY BACKING PLATE
17	2	SECURITY STRIKE PLATE
16	3	4" X 4" THERMA-TRU BRAND SELF-LOCATING HINGES SECURED W/4 #10 X 2 1/2" PINS (2 TOP - 1 CENTER AND BOTTOM) AND 8 #10 X 3/4" PINS
15	4	2 1/2" STAPLES
14	1	KWIKSET 660 SERIES DEAD BOLT
13	1	KWIKSET 400 SERIES LOCK SET
12	1	INACTIVE DOOR BOTTOM
11	1	5 3/4" X 1 1/2" ENSWING SILL
10	1	DUAL DUROMETER ACTIVE DOOR SWEEP
9	AS REQD	THERMA-TRU BRAND COMPRESSION WEATHERSTRIP
8	1	2" X 3 9/16" WOOD MULLION
7	3	4 9/16" X 1 1/4" WOOD JAMBS
6	4	1 3/8" X 1" CELLULAR PCW PLASTIC WITH #6 X 1 3/4" TYPE AB PAN HEAD PHILLIPS SCREWS
5	2	1" INSULATED GLASS UNIT - 1/8" TEMPERED GLASS WITH 3/4" SPACER
4	4	END RAILS
3	4	1 1/4" X 1 1/16" PINE STILES
2	AS REQD	POLYURETHANE FOAM CORE, 1.9 PCF DENSITY
1	4	.125 THICK FIBERGLASS SKIN

BILL OF MATERIAL

PRODUCT RENEWED

ACCEPTANCE No. 01-0912.04

EXPIRATION DATE September 29, 2006

By

PRODUCT CONTROL DIVISION
BUILDING CODE COMPLIANCE OFFICE

APPROVED AS COMPLYING WITH THE SOUTH FLORIDA BUILDING CODE
DATE October 19, 2000
BY Manuel Sierra
PRODUCT CONTROL DIVISION
BUILDING CODE COMPLIANCE OFFICE
ACCEPTANCE NO. 00-0928.02

DESIGN PRESSURE RATING	
POSITIVE	+ 45.33 psf (If water test not required) + 30.0 psf (If water test required)
NEGATIVE	- 50.67 psf

THERMA-TRU® CORPORATION

TITLE: 6/0 X 6/8 FIBER-CLASSIC INSWING MODERATE CLIMATE PATIO

DRAWN BY:	DATE:	SCALE:	DRAWING NO.:	REV:	SHEET:
R.F.	3-31-97	NONE	80122	B	1 OF 3

APPROVED AS COMPLYING WITH THE SOUTH FLORIDA BUILDING CODE
DATE May 19, 2000
BY Manuel Sierra
PRODUCT CONTROL DIVISION
BUILDING CODE COMPLIANCE OFFICE
ACCEPTANCE NO. 00-0207.07

APPROVED AS COMPLYING WITH THE SOUTH FLORIDA BUILDING CODE
DATE APRIL 08 1997
BY Manuel Sierra
PRODUCT CONTROL DIVISION
BUILDING CODE COMPLIANCE OFFICE
ACCEPTANCE NO. 95-0223.01

REV	DESCRIPTION	DATE
B	REVISED DOOR THICKNESS DIM & MASONRY SCREW	2-3-99

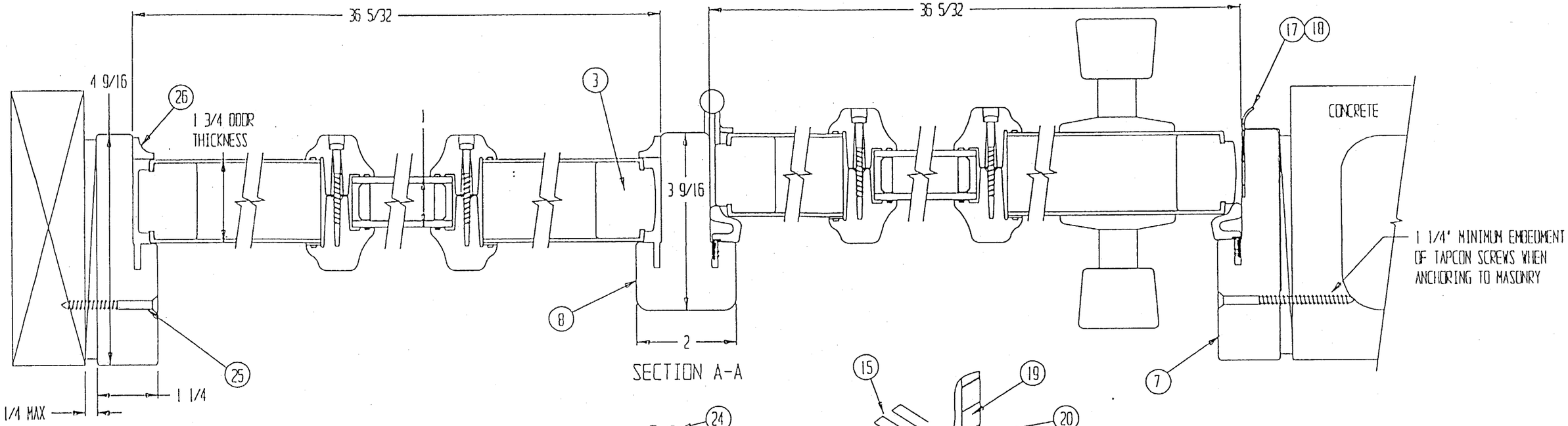

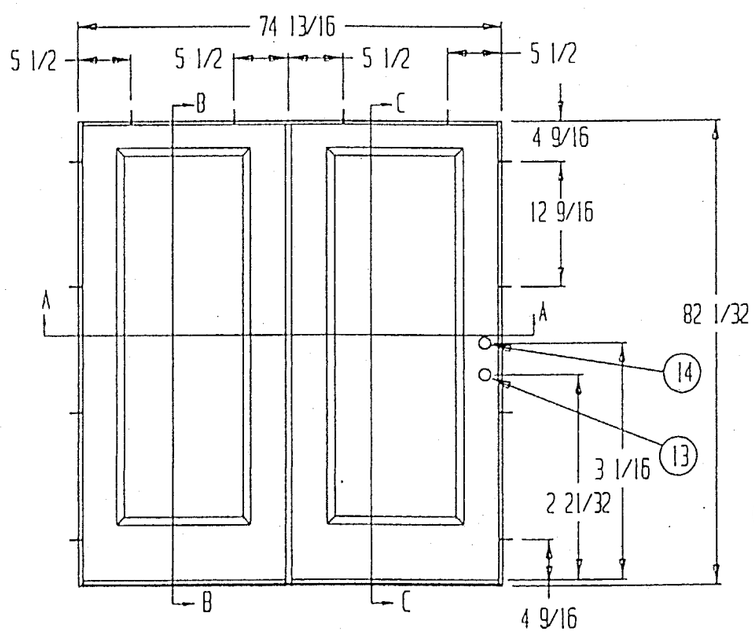

CONFIGURATION: OX

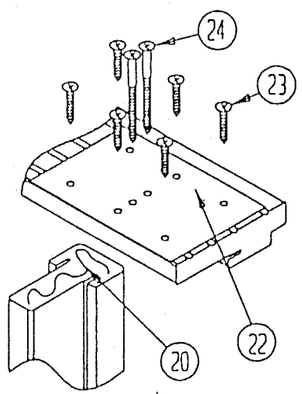

MULLION HEAD ASSEMBLY

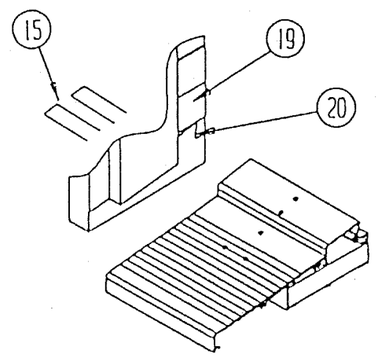

CORNER ASSEMBLY

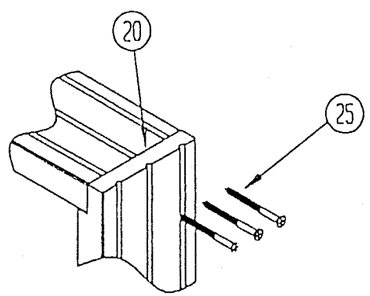

CORNER ASSEMBLY

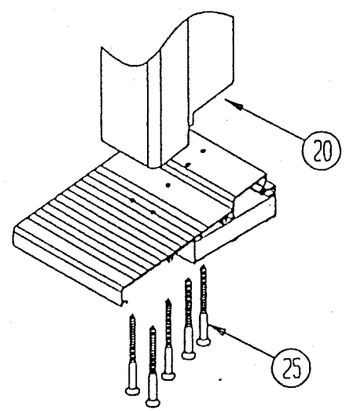

MULLION SILL ASSEMBLY

PRODUCT RENEWED

ACCEPTANCE No. 01-0912.04

EXPIRATION DATE September 29, 2006

By _____

PRODUCT CONTROL DIVISION
BUILDING CODE COMPLIANCE OFFICE

APPROVED AS COMPLYING WITH THE SOUTH FLORIDA BUILDING CODE
DATE October 19, 2000
BY Manuel Perez
PRODUCT CONTROL DIVISION
BUILDING CODE COMPLIANCE OFFICE
ACCEPTANCE NO. 00-0928.02

THERMATRU® CORPORATION

TITLE: 6/0 X 6/8 FIBER-CLASSIC INSWING MODERATE CLIMATE PATIO

DRAWN BY:	DATE:	SCALE:	DRAWING NO.:	REV:	SHEET:
R.F.	3-31-97	NONE	80122	B	2 OF 3

APPROVED AS COMPLYING WITH THE SOUTH FLORIDA BUILDING CODE
DATE May 19, 2000
BY Manuel Perez
PRODUCT CONTROL DIVISION
BUILDING CODE COMPLIANCE OFFICE
ACCEPTANCE NO. 00-0207.07

APPROVED AS COMPLYING WITH THE SOUTH FLORIDA BUILDING CODE
DATE April 08, 1999
BY Manuel Perez
PRODUCT CONTROL DIVISION
BUILDING CODE COMPLIANCE OFFICE
ACCEPTANCE NO. 99-0223.01

REV	DESCRIPTION	DATE
A	REVISED DWG PER BCCD PRODUCT CONTROL DIVISION	1-8-99
B	REVISED SHEET 2	2-3-99

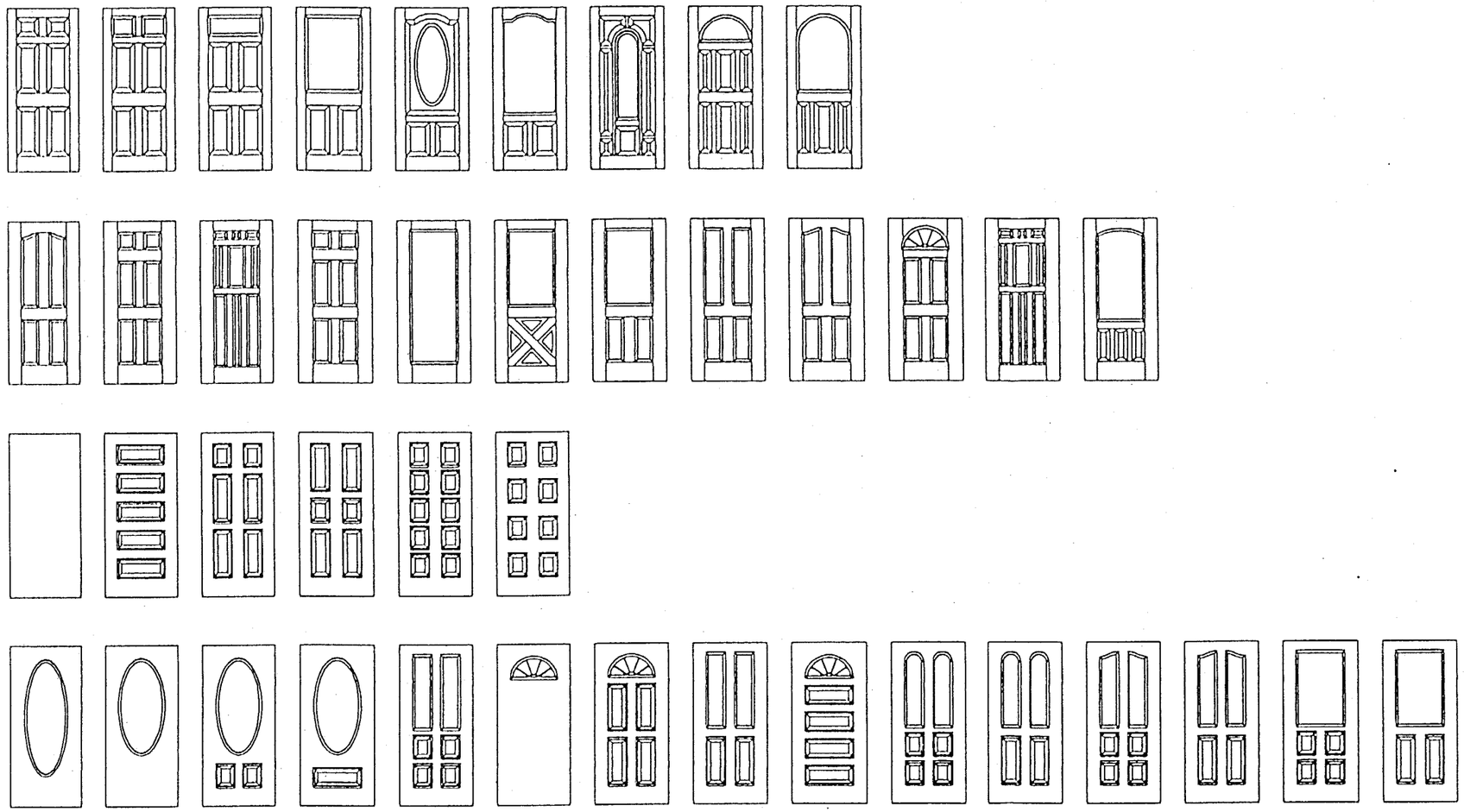

PRODUCT RENEWED

ACCEPTANCE No. 01-0912.04

EXPIRATION DATE September 29, 2006

By

PRODUCT CONTROL DIVISION
BUILDING CODE COMPLIANCE OFFICE

APPROVED AS COMPLYING WITH THE
SOUTH FLORIDA BUILDING CODE
DATE October 19, 2000
BY Manuel Perez
PRODUCT CONTROL DIVISION
BUILDING CODE COMPLIANCE OFFICE
ACCEPTANCE NO. 00-0928.02

THERMATRU® CORPORATION

TITLE: 6/0 X 6/8 FIBER-CLASSIC INSWING MODERATE CLIMATE PATIO

DRAWN BY:	DATE:	SCALE:	DRAWING NO.:	REV:	SHEET:
R.F.	3-31-97	NONE	80122	B	3 OF 3

APPROVED AS COMPLYING WITH THE
SOUTH FLORIDA BUILDING CODE
DATE May 19, 2009
BY Manuel Perez
PRODUCT CONTROL DIVISION
BUILDING CODE COMPLIANCE OFFICE
ACCEPTANCE NO. 00-0207.07

APPROVED AS COMPLYING WITH THE
SOUTH FLORIDA BUILDING CODE
DATE APRIL 08 1997
BY Manuel Perez
PRODUCT CONTROL DIVISION
BUILDING CODE COMPLIANCE OFFICE
ACCEPTANCE NO. 98-0223.01