MIAMI-DADE

BUILDING CODE COMPLIANCE OFFICE (BCCO)
PRODUCT CONTROL DIVISION

MIAMI-DADE COUNTY, FLORIDA
METRO-DADE FLAGLER BUILDING
140 WEST FLAGLER STREET, SUITE 1603
MIAMI, FLORIDA 33130-1563
(305) 375-2901 FAX (305) 375-2908

NOTICE OF ACCEPTANCE (NOA)

GAMMA, U. S. A.
15407 West Dixie Highway Inc.
N. Miami, FL 33162

SCOPE:
This NOA is being issued under the applicable rules and regulations governing the use of construction materials. The documentation submitted has been reviewed by Miami-Dade County Product Control Division and accepted by the Board of Rules and Appeals (BORA) to be used in Miami Dade County and other areas where allowed by the Authority Having Jurisdiction (AHJ).

This NOA shall not be valid after the expiration date stated below. The Miami-Dade County Product Control Division (In Miami Dade County) and/or the AHJ (in areas other than Miami Dade County) reserve the right to have this product or material tested for quality assurance purposes. If this product or material fails to perform in the accepted manner, the manufacturer will incur the expense of such testing and the AHJ may immediately revoke, modify, or suspend the use of such product or material within their jurisdiction. BORA reserves the right to revoke this acceptance, if it is determined by Miami-Dade County Product Control Division that this product or material fails to meet the requirements of the applicable building code.

This product is approved as described herein, and has been designed to comply with the High Velocity Hurricane Zone of the Florida Building Code.

DESCRIPTION: Ser. 4600 Alum. Window Wall System w/Alum. Single Hung Win. S.I.

APPROVAL DOCUMENT: Drawing No. P0108G1, titled "Single Hung Window G-100 Series S.I.", sheets 1 through 4 of 4, prepared by Farrokh Rasekhi, P. E., dated 1/16/02, bearing the Miami-Dade County Product Control Approval stamp with the Notice of Acceptance number and approval date by the Miami-Dade County Product Control Division.

MISSILE IMPACT RATING: Small Impact Test

LABELING: Each unit shall bear a permanent label with the manufacturer's name or logo, city, state and following statement: "Miami-Dade County Product Control Approved", unless otherwise noted herein.

RENEWAL of this NOA shall be considered after a renewal application has been filed and there has been no change in the applicable building code negatively affecting the performance of this product.

TERMINATION of this NOA will occur after the expiration date or if there has been a revision or change in the materials, use, and/or manufacture of the product or process. Misuse of this NOA as an endorsement of any product, for sales, advertising or any other purposes shall automatically terminate this NOA. Failure to comply with any section of this NOA shall be cause for termination and removal of NOA.

ADVERTISEMENT: The NOA number preceded by the words Miami-Dade County, Florida, and followed by the expiration date may be displayed in advertising literature. If any portion of the NOA is displayed, then it shall be done in its entirety.

INSPECTION: A copy of this entire NOA shall be provided to the user by the manufacturer or its distributors and shall be available for inspection at the job site at the request of the Building Official.

This NOA consists of this page 1 as well as approval document mentioned above.
The submitted documentation was reviewed by **Raul Rodriguez.**

PRODUCT CONTROL ACCEPTED

NOA No 01-0927.01
Expiration Date: March 21, 2007
Approval Date: March 21, 2002

27	SINGLE HUNG	2	XXO	42-52	120	110	SI

Gamma USA
15407 West Dixie Highway,
North Miami Beach, FL 33162
Phone: (305) 957-7004 FAX: (305) 957-7006

WINDOW

PROJECT:	SINGLE HUNG WINDOW G-100 SERIES (S.I.)	DATE:	06/22/01
		PROJECT #	0108
TITLE:	TYPICAL ELEVATION & LIST OF MATERIALS(LAB#3170)	SCALE:	

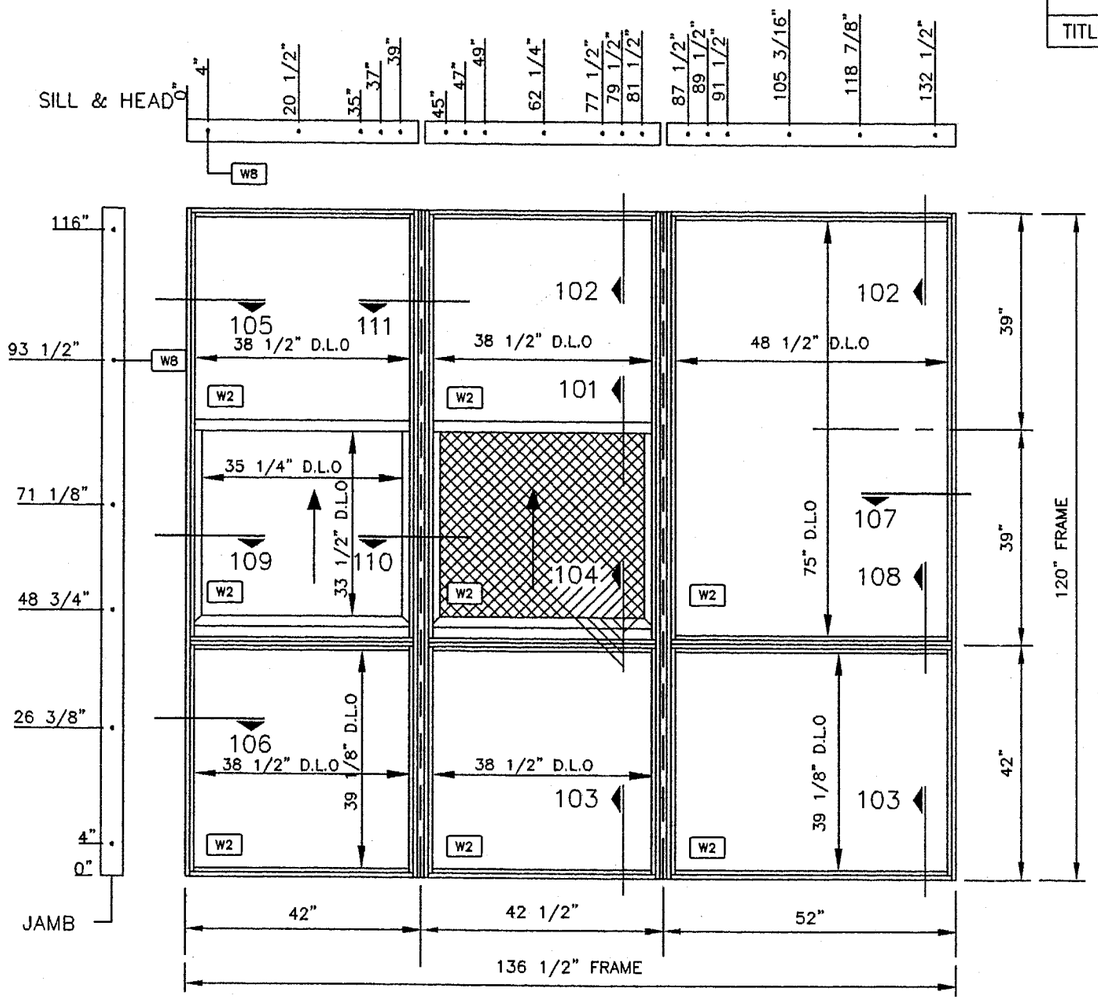

exterior view elevation

SMALL IMPACT TEST

- DESIGN PRESSURE + 100 psf
- DESIGN PRESSURE - 110 psf

DESCRIPTION LIST

W1	ALUMINUM FRAME # 945316 AL 6063 T6
W2	1/2" LAMINATED GLASS 3/16" CLEAR TEMPERED EXT. GLASS 0.060" PVB SAFLEX laminated by PRELCO 1/4" TEMPERED TEINTED GREEN INT. GLASS
W3	ALUMINUM CAP SNAP-ON # 945485 AL 6063 T6
W4	EPDM GASKET # 89Q20
W5	1/4" NEOPRENE SITTING BLOCK 4" LONG AT L/4 ON 4 SIDES
W6	3/16" POLYSHIM
W7	SPECTREM 2 (SILICONE)
W8	TAPCON SCREW 1/4" DIA., 2 3/4" LONG
W9	TPR EXTRUDED GASKET # TP-117
W10	2" X2 "X 0.140" X 1 3/8" LONG ALUMINUM ANGLE (AT CORNER)
W11	#10 X 1/2" LONG FH UNDER CUT SCREW
W12	SASH BOTTOM #998110 (AL 6063 T6)
W13	AIR/WATER SEAL POLYPROPYLENE STRIP #3046
W14	ALUMINUM SILL # 945360 (AL 6063 T6)
W15	MOHAIR WEATHER STRIP #FS 7635-187
W16	ALUMINUM CAM LOCK TRUTH #17-31-32-100
W17	ALUMINUM KEEPER TRUTH #40362
W18	ALUMINUM LIFT HANDLE EXTRUDED WITHIN SASH BASE
W19	ALUMINUM COVER # 945319 (AL 6063 T6)
W20	ALUMINUM FRAME # 998109 (AL 6063 T6)
W21	ALUMINUM #997494 (AL 6063 T6)
W22	ALUMINUM STOPPER #945318 (AL 6063 T6)
W23	SASH BALANCE TYPE LITE LIFT "D" SERIES (BY UNIQUE)
W24	ALUMINUM COVER # 945359 3 1/2" LONG (AL 6063 T6)
W25	ALUMINUM MULLION # 997607
W26	STEEL FLAT BAR 5 3/4" X 1/4" THICK
W28	FOAM TAPE # 177FXR 1/16"X3/8" (37" long under jamb angle, 3/4" long at bottom polyflex intersection)
W29	1 1/8" CUT OUT AT EACH END
W30	#10 X 3/4" LONG STS SCREW @ 4", 42, 79, 116"
W31	ALUMINUM FRAME #998108 AL 6063 T6
W32	1/8" POLYSHIM
W33	ALUMINUM FRAME #945317 AL 6063 T6
W34	3M ADHESIVE MOHAIR 1/4" X 3/8" x 3" EACH SIDE
W36	#8 X 1" PH STS METAL SCREW (3 FOR CORNER, 3 FOR MEETING RAIL)
W37	#8 X 1/4" FH STS SCREW (5 PER ADAPTER, 2 PER VENT STOP)
W38	#12 X 1 1/2" FH STS SCREWS @ 51", 75"
W39	#12 X 2" FH STS SCREWS @ 50", 74 "
W40	INSECT SCREEN WITH : 2 WEEPHOLES 1 1/2" X 1/4" AND SIDE PINS @ 9 1/2" OF EACH CORNERS
W41	ALUMINUM CHANNEL 3/8" X 3 11/16"X 0.080" X 4" FOR EACH SCREW

Farrokh Rasekhi, P.E.
Consulting Struct. Engineer
FL. REG. NO. 38001
Date: 1/16/02

APPROVED AS COMPLYING WITH THE
SOUTH FLORIDA BUILDING CODE
DATE March 21 2002
BY
PRODUCT CONTROL DIVISION
BUILDING CODE COMPLIANCE OFFICE
ACCEPTANCE NO. 01-0927.01

REVISION:	R1 07-25-01	R2 12-19-01
DRAWN BY:	PHILIPPE MICHAUD	
CHECKED BY:		
CAD NAME:	P0108G1	

1 / 4

27	SINGLE HUNG	2	XXO	42-52	120	110	SI

Gamma USA
15407 West Dixie Highway,
North Miami Beach, FL 33162
Phone: (305) 957-7004 FAX: (305) 957-7006

WINDOW

PROJECT:	SINGLE HUNG WINDOW G-100 SERIES (S.I.)	DATE:	06/22/01
		PROJECT #	0108
TITLE:	TYPICAL DETAILS 101,102,103 & 104	SCALE:	1/2" = 1"

Farrokh Rasekhi, P.E.
Consulting Struct. Engineer
FL. REG. NO. 38001
Date: 1/16/02

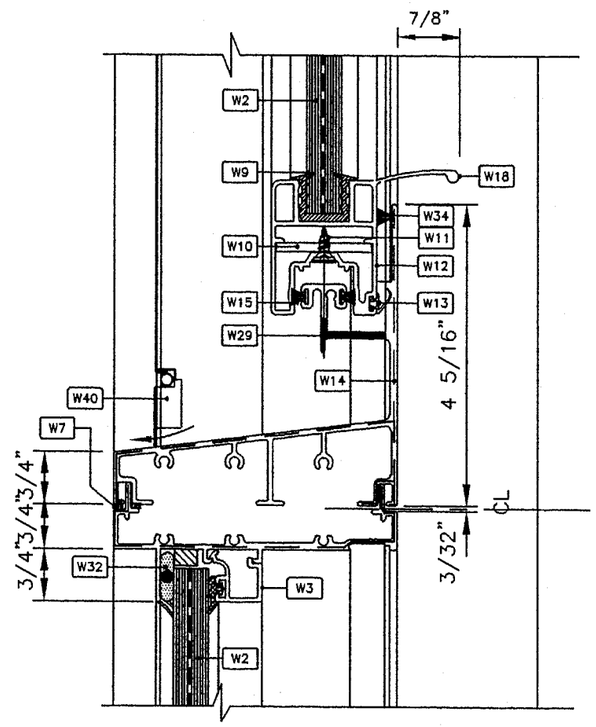

detail 104

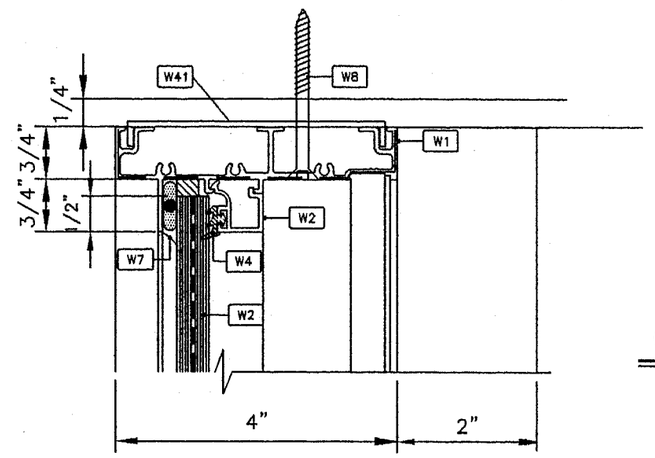

detail 102

OUTSIDE INSIDE

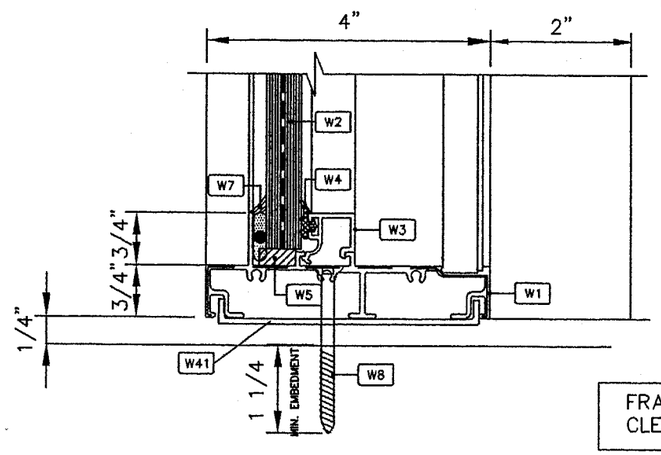

detail 103

OUTSIDE INSIDE

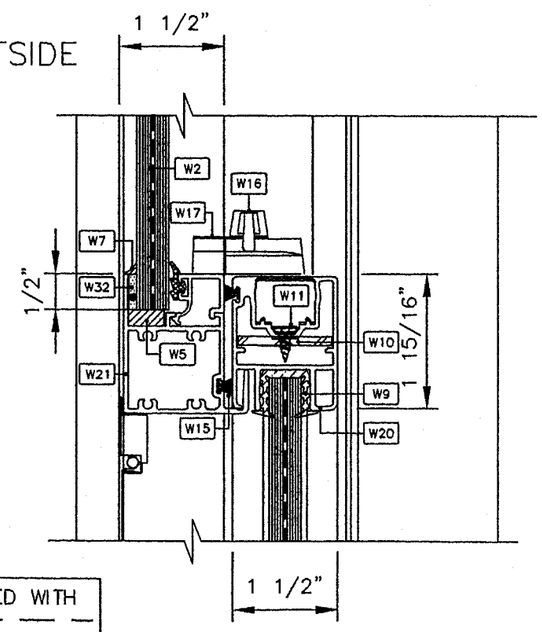

detail 101

FRAME CORNERS, MEETING RAIL SEAM SEALED WITH CLEAR SEALANT AS INDICATED

APPROVED AS COMPLYING WITH THE SOUTH FLORIDA BUILDING CODE
DATE March 21, 2002
BY
PRODUCT CONTROL DIVISION
BUILDING CODE COMPLIANCE OFFICE
ACCEPTANCE NO. 01-0927.01

REVISION:	R1 07-25-01	R2 12-19-01
DRAWN BY:	PHILIPPE MICHAUD	
CHECKED BY:		
CAD NAME:	P0108G1	

27	SINGLE HUNG	2	XXO	42-52	120	110	SI

Gamma USA
15407 West Dixie Highway,
North Miami Beach, FL 33162
Phone: (305) 957-7004 FAX: (305) 957-7006

WINDOW

PROJECT:	SINGLE HUNG WINDOW G-100 SERIES(S.I.)	DATE:	06/22/01
		PROJECT #	0108
TITLE:	TYPICAL DETAILS 105,106 & 107	SCALE:	1/2" = 1"

Farrokh Rasekhi, P.E.
Consulting Struct. Engineer
FL. REG. NO. 38001
Date: 1/16/02

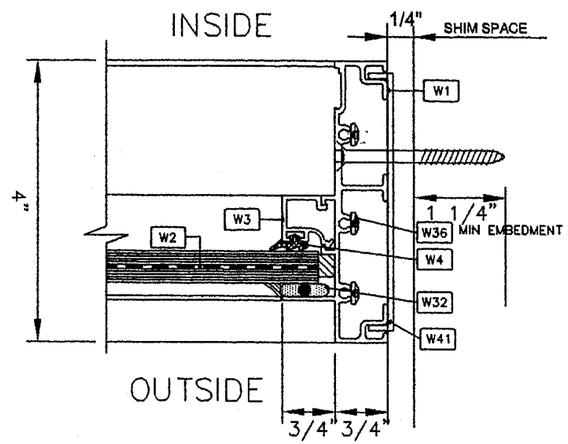

detail 107

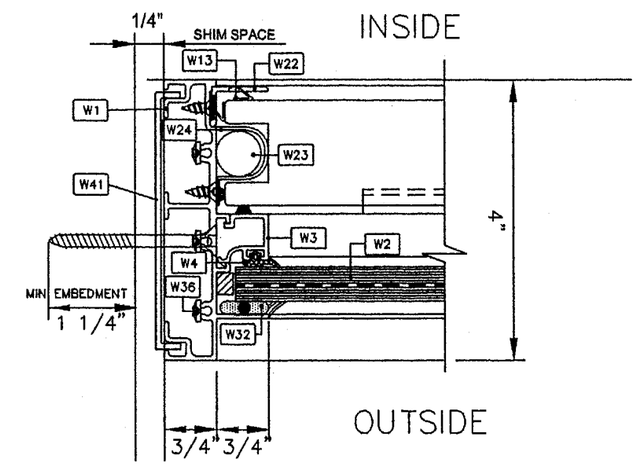

detail 105

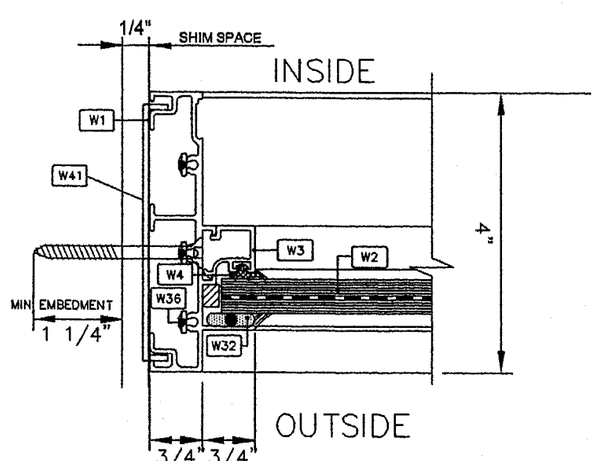

detail 106

APPROVED AS COMPLYING WITH THE
SOUTH FLORIDA BUILDING CODE
DATE March 21 2002
BY
PRODUCT CONTROL DIVISION
BUILDING CODE COMPLIANCE OFFICE
ACCEPTANCE NO. 01-0927.01

REVISION:	R1 07-25-01	R2 12-19-01
DRAWN BY:	PHILIPPE MICHAUD	
CHECKED BY:		
CAD NAME:	P0108G1	

3 / 4

27	SINGLE HUNG	2	XXO	42-52	120	110	SI

Gamma USA
15407 West Dixie Highway,
North Miami Beach, FL 33162
Phone: (305) 957-7004 FAX: (305) 957-7006

WINDOW

PROJECT:	SINGLE HUNG WINDOW G-100 SERIES(S.I.)	DATE:	06/22/01
		PROJECT #	0108
TITLE:	TYPICAL DETAILS 108,109,110 & 111	SCALE:	1/2" = 1"

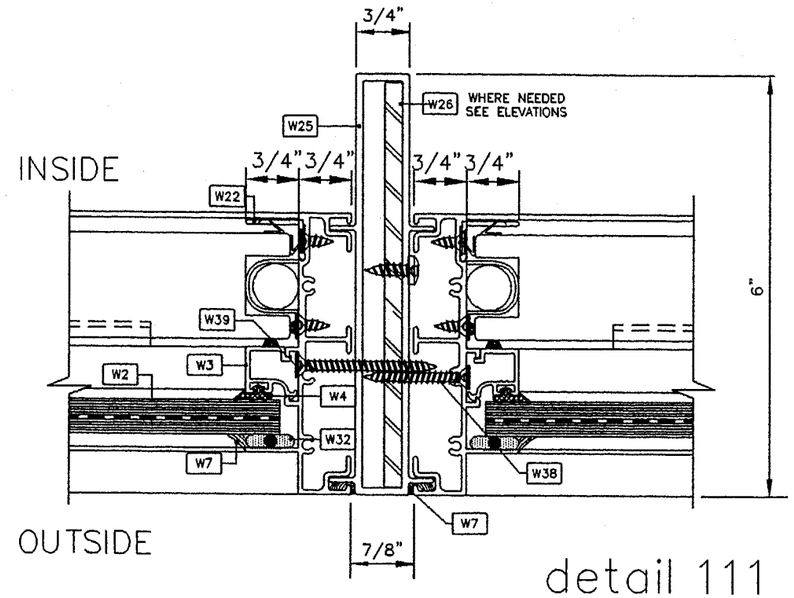

detail 111

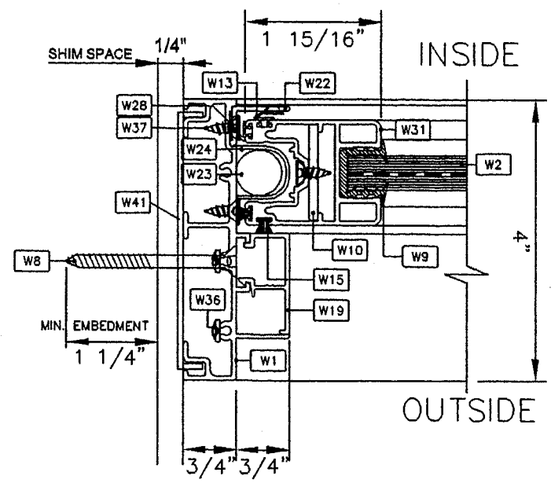

detail 109

Farrokh Rasekhi, P.E.
Consulting Struct. Engineer
FL. REG. NO. 38001
Date: 1/16/02

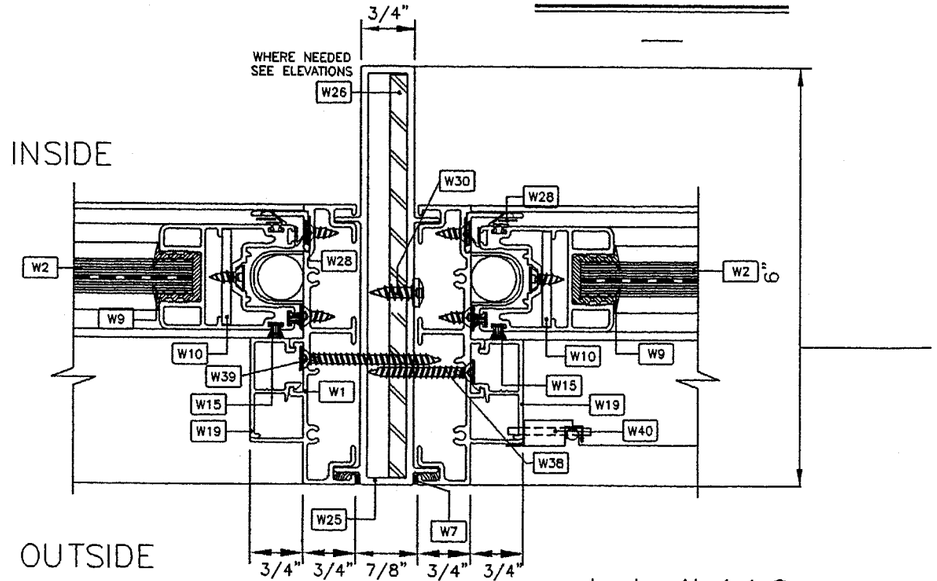

detail 110

APPROVED AS COMPLYING WITH THE
SOUTH FLORIDA BUILDING CODE
DATE March 21, 2002
BY
PRODUCT CONTROL DIVISION
BUILDING CODE COMPLIANCE OFFICE
ACCEPTANCE NO. 01-0927.01

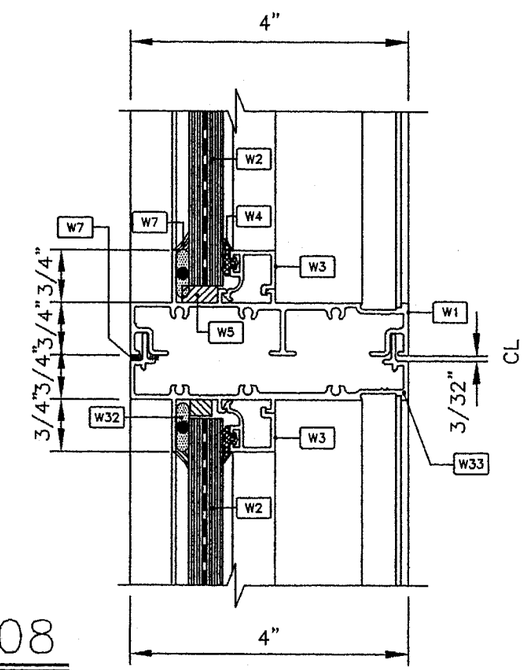

detail 108

REVISION:	R1 07-25-01 R2 12-19-01
DRAWN BY:	PHILIPPE MICHAUD
CHECKED BY:	
CAD NAME:	P0108G1

4/4