MIAMI-DADE

MIAMI-DADE COUNTY, FLORIDA
METRO-DADE FLAGLER BUILDING

BUILDING CODE COMPLIANCE OFFICE
METRO-DADE FLAGLER BUILDING
140 WEST FLAGLER STREET, SUITE 1603
MIAMI, FLORIDA 33130-1563
(305) 375-2901 FAX (305) 375-2908

CONTRACTOR LICENSING SECTION
(305) 375-2527 FAX (305) 375-2558

CONTRACTOR ENFORCEMENT DIVISION
(305) 375-2966 FAX (305) 375-2908

PRODUCT CONTROL DIVISION
(305) 375-2902 FAX (305) 372-6339

PRODUCT CONTROL NOTICE OF ACCEPTANCE

R.C. Aluminum Industries, Inc.
2805 N.W. 75 Avenue
Miami ,FL 33122

Your application for Notice of Acceptance (NOA) of:
Series 2400 ST Sliding Glass Door (Small Missile)
under Chapter 8 of the Code of Miami-Dade County governing the use of Alternate Materials and Types of Construction, and completely described herein, has been recommended for acceptance by the Miami-Dade County Building Code Compliance Office (BCCO) under the conditions specified herein.

This NOA shall not be valid after the expiration date stated below. BCCO reserves the right to secure this product or material at any time from a jobsite or manufacturer's plant for quality control testing. If this product or material fails to perform in the approved manner, BCCO may revoke, modify, or suspend the use of such product or material immediately. BCCO reserves the right to revoke this approval, if it is determined by BCCO that this product or material fails to meet the requirements of the South Florida Building Code.

The expense of such testing will be incurred by the manufacturer.

ACCEPTANCE NO.: 01-0927.04
EXPIRES: 02/07/2007

Raul Rodriguez
Chief Product Control Division

THIS IS THE COVERSHEET, SEE ADDITIONAL PAGES FOR SPECIFIC AND GENERAL CONDITIONS
BUILDING CODE & PRODUCT REVIEW COMMITTEE

This application for Product Approval has been reviewed by the BCCO and approved by the Building Code and Product Review Committee to be used in Miami-Dade County, Florida under the conditions set forth above.

Francisco J. Quintana, R.A.
Director
Miami-Dade County
Building Code Compliance Office

APPROVED: 02/07/2002

NOTICE OF ACCEPTANCE: SPECIFIC CONDITIONS

1. SCOPE

1.1 This approves an aluminum sliding glass, as described in Section 2 of this NOA, designed to comply with the South Florida Building Code (SFBC), 1994 Edition for Miami-Dade County, for the locations where the pressure requirements, as determined by SFBC Chapter 23, do not exceed the Design Pressure Rating values indicated in the approved drawings.

2. PRODUCT DESCRIPTION

2.1 The **Series "2400ST" Aluminum Sliding Glass Door- Small Missile Impact Resistant** and its components shall be constructed in strict compliance with the following document: Drawing No **WO1-54**, Sheets 1 through 6 of 6, titled "Series-2400ST Alum. Sld. Glass Door (S.M.)," prepared by Al Farooq Corporation, dated 8/17/01 and revised on 11/02/01, signed and sealed by Humayoun Farooq, P.E., bearing the Miami-Dade County Product Control approval stamp with the NOA number and approval date by the Miami-Dade County Product Control Division. This document shall hereinafter be referred to as the approved drawings.

3. LIMITATIONS

3.1 This approval applies to single unit applications, as shown approved drawings.

4. INSTALLATION

4.1 The aluminum sliding glass door and its components shall be installed in strict compliance with the approved drawings.

4.2 Hurricane protection system (shutters): The installation of this unit up to 30 feet above grade, **will require** a hurricane protection system, but for installations above 30 feet above grade **will not require** a hurricane protection system.

5. LABELING

5.1 Each unit shall bear a permanent label with the manufacturer's name or logo, city, state and following statement: "Miami-Dade County Product Control Approved".

6. BUILDING PERMIT REQUIREMENTS

6.1 Application for building permit shall be accompanied by copies of the following:

6.1.1 This Notice of Acceptance

6.1.2 Duplicate copies of the approved drawings, as identified in Section 2 of this Notice of Acceptance, clearly marked to show the components selected for the proposed installation.

6.1.3 Any other documents required by the Building Official or the South Florida Building Code (SFBC) in order to properly evaluate the installation of this system.

Raul Rodriguez, Chief
Product Control Division

R.C. Aluminum Industries, Inc. **ACCEPTANCE No.: 01-0927.04**

APPROVED: February 7, 2002

EXPIRES: February 7, 2007

NOTICE OF ACCEPTANCE: STANDARD CONDITIONS

1. Renewal of this Acceptance (approval) shall be considered after a renewal application has been filed and the original submitted documentation, including test supporting data, engineering documents, are no older than eight (8) years.

2. Any and all approved products shall be permanently labeled with the manufacturer's name, city, state, and the following statement: "Miami-Dade County Product Control Approved", or as specifically stated in the specific conditions of this Acceptance.

3. Renewals of Acceptance will not be considered if:
   a) There has been a change in the South Florida Building Code affecting the evaluation of this product and the product is not in compliance with the code changes;
   b) The product is no longer the same product (identical) as the one originally approved;
   c) If the Acceptance holder has not complied with all the requirements of this acceptance, including the correct installation of the product;
   d) The engineer who originally prepared, signed and sealed the required documentation initially submitted is no longer practicing the engineering profession.

4. Any revision or change in the materials, use, and/or manufacture of the product or process shall automatically be cause for termination of this Acceptance, unless prior written approval has been requested (through the filing of a revision application with appropriate fee) and granted by this office.

5. Any of the following shall also be grounds for removal of this Acceptance:
   a) Unsatisfactory performance of this product or process.
   b)Misuse of this Acceptance as an endorsement of any product, for sales, advertising or any other purpose.

6. The Notice of Acceptance number preceded by the words Miami-Dade County, Florida, and followed by the expiration date may be displayed in advertising literature. If any portion of the Notice of Acceptance is displayed, then it shall be done in its entirety.

7. A copy of this Acceptance as well as approved drawings and other documents, where it applies, shall be provided to the user by the manufacturer or its distributors and shall be available for inspection at the job site at all time. The engineer need not reseal the copies.

8. Failure to comply with any section of this Acceptance shall be cause for termination and removal of Acceptance.

9. This Notice of Acceptance consists of pages 1, 2 and this last page 3.

END OF THIS ACCEPTANCE

Raul Rodriguez, Chief
Product Control Division

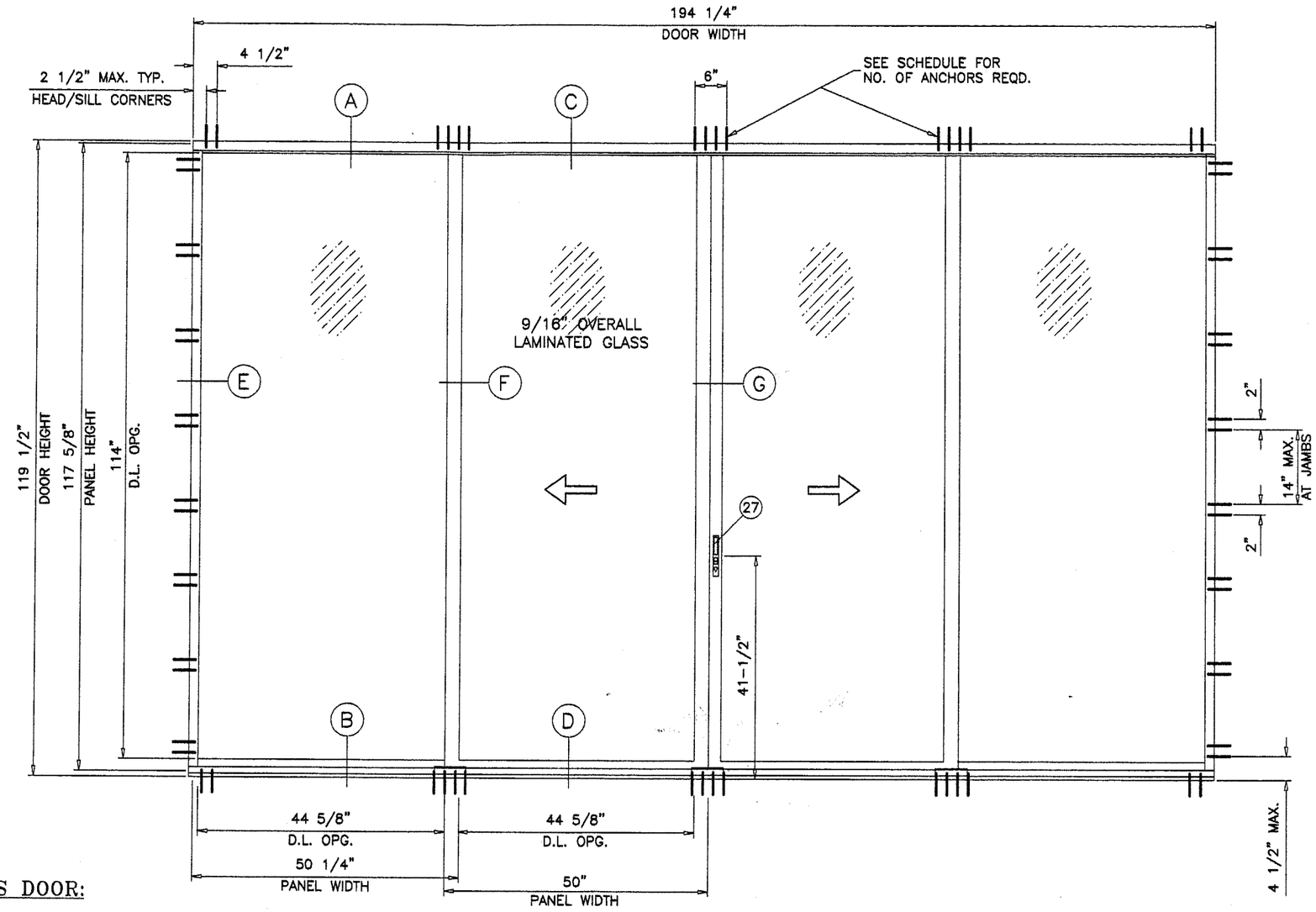

TYPICAL ELEVATION
TESTED UNIT

SERIES 2400ST ALUMINUM SLIDING GLASS DOOR:

DOORS GLAZED WITH 9/16" GLASS (.060" INTERLAYER) RATED FOR SMALL MISSILE IMPACT AND REQUIRE PROTECTION BY APPROVED IMPACT RESISTANT SHUTTERS FOR INSTALLATIONS BELOW 30 FT. OF GRADE.

SEE SHEET 2 FOR CAPACITY.

DOORS MAY HAVE ANY NUMBER OF PANELS USING STILE CONIGURATIONS AS SHOWN ON SHEET 4.
I.E. OX, XO, OXO, OXXO.

THESE PRODUCTS ARE DESIGNED AS PER THE SOUTH FLORIDA BUILDING CODE 1994 EDITION FOR DADE COUNTY. ALSO FOR WIND LOADS AS PER ASCE 7 USING CORRESPONDING LOADS.

WOOD BUCKS BY OTHERS, MUST BE ANCHORED PROPERLY TO TRANSFER LOADS TO THE STRUCTURE.

ANCHORS SHALL BE AS LISTED, SPACED AS SHOWN ON DETAILS. ANCHOR EMBEDMENT TO BASE MATERIAL SHALL BE BEYOND WALL DRESSING OR STUCCO.

ALL STEEL IN CONTACT WITH ALUMINUM TO BE PAINTED OR PLATED.

NO. OF ANCHORS REQD. AT HEAD AT STILE LOCATIONS

SUBSTRATE	THRU WOOD BUCKS INTO MASONRY			DIRECTLY INTO MASONRY			INTO METAL STRUCTURES		
DESIGN LOAD	75 PSF	100 PSF	131 PSF	75 PSF	100 PSF	131 PSF	75 PSF	100 PSF	131 PSF
1/4" SHIM	5	6	7	4	4	4	4	4	5
3/8" SHIM	5	6	7	4	6	6	6	7	8
1/2" SHIM	5	7	8	5	7	8	7	9	10

APPROVED AS COMPLYING WITH THE
SOUTH FLORIDA BUILDING CODE
DATE February 7, 2002
BY
PRODUCT CONTROL DIVISION
BUILDING CODE COMPLIANCE OFFICE
ACCEPTANCE NO. 01-0927.04

Engr: DR. HUMAYOUN FAROOQ
STRUCTURES
FLA. PE # 16557

JAN 1 5 2002

AL-FAROOQ CORPORATION
ENGINEERS, PLANNERS & PRODUCT DESIGN
1235 SW 87 AVE
MIAMI, FLORIDA 33174
TEL. (305) 264-8100 FAX. (305) 262-6978

COMP-ANL\W01-54RC

SERIES-2400ST ALUM SLD. GLASS DOOR (S.M.)

R.C. ALUMINUM INDUSTRIES INC.
2805 N.W. 75 TH AVE.
MIAMI, FL. 33122
TEL. (305) 592-1515 FAX. (305) 592-2184

revisions:

no	date	by	description
A	09.19.01		GLAZING DETAIL REV.
B	11.02.01		REV. PER BCCO COMMENTS

date: 08-17-01
scale: 1/2"=1'-0"
dr. by: HAMID
chk. by:

drawing no.
W01-54

SMALL MISSILE IMPACT RESISTANT DOORS
SHUTTERS NOT REQUIRED FOR INSTALLATIONS ABOVE 30 FT. OF GRADE

PANEL WIDTH NOMINAL FT./IN.	DOOR HEIGHT FT./IN.	DESIGN LOAD CAPACITY – PSF	
		EXT. (+)	INT. (–)
2/6	8/0	131.0	131.0
3/0		131.0	131.0
3/6		131.0	131.0
4/0		130.3	130.3
4/6		112.3	112.3
5/0		98.5	98.5
2/6	8/6	131.0	131.0
3/0		131.0	131.0
3/6		131.0	131.0
4/0		127.5	127.5
4/6		105.3	105.3
2/6	9/0	131.0	131.0
3/0		131.0	131.0
3/6		131.0	131.0
4/0		120.4	120.4
2/6	9/6	131.0	131.0
3/0		131.0	131.0
3/6		131.0	131.0
4/0		113.8	113.8
2/6	10/0	131.0	131.0
3/0		131.0	131.0
3/6		131.0	131.0
4/0		108.1	108.1

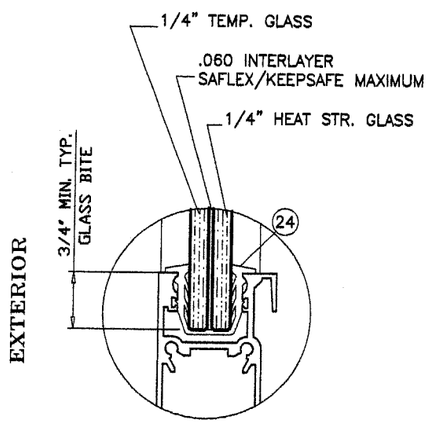

SMALL MISSILE IMPACT RESISTANT
LAMINATED BY 'ARCH ALUM'

GLAZING DETAIL

ITEM NO.	PART NUMBER	QUANTITY	DESCRIPTION	MATERIAL	MANF./SUPPLIER/REMARKS
1	2400ST–018	1	FRAME HEAD	6063–T6	–
2	2400ST–010	1	FRAME SILL	6005–T5	–
3	2400ST–001	2	FRAME JAMB	6063–T6	–
4	2400ST–008	1/MOV. PANEL	MOVING HORIZ. BOTT. RAIL	6063–T6	–
5	2400ST–009	1/FIX. PANEL	FIXED HORIZ. BOTT. RAIL	6063–T6	–
6	2400ST–006	1/MOV. PANEL	TOP MOVING RAIL	6063–T6	–
7	2400ST–007	1/FIX. PANEL	TOP FIXED RAIL	6063–T6	–
8	2400ST–004	1/FIX. PANEL	JAMB FIXED STILE	6063–T6	–
9	2400ST–002	1	LOCK STILE	6063–T6	–
10	2400ST–003	1/ PANEL	INTERLOCK	6005–T5	–
11	2400ST–005	1	MEETING STILE	6005–T5	–
12	2400ST–012	1	THRESHOLD FILLING TRACK	6063–T6	–
13	2400ST–011	–	SILL TRACK ANCHOR	6005–T5	–
14	2400ST–019	1	HEAD ADAPTER	6063–T6	–
15	2400ST–031	2	SILL TRACK PLATE (5–1/4" X 1/4" X 4" LONG	ALUMINUM	AT EACH END
15A	2400ST–031	3	SILL TRACK PLATE (5–1/4" X 1/4" X 8" LONG	ALUMINUM	AT INTERLOCK/ASTRAGAL STILES
16	2400ST–032	–	MTG. RAIL THRESHOLD SEAL	6063–T5	6" LONG
17	#10 X 1/2"	2	WEATHERSTRIP FASTENERS	–	–
18	V–027	–	BULB W'STRIPPING	VINYL	FP–712 PROTOTYPE
19	WV–2310	–	FLAP WEATHER SEAL	VINYL	WIBORG
20	V–026	–	BULB W'STRIPPING	VINYL	FP–198 PROTOTYPE
21	W31265NK	–	FIN PILE W'STRIPPING	–	ULTRAFAB
22	Q250X270	–	Q–LON W'STRIPPING	–	SCHLEGEL
23	–	–	–	–	–
24	V–022	AS REQD.	GLAZING GASKET (9/16" GLASS)	VINYL	–
25	–	–	–	–	–
26	100–7101	2/MOV. PANEL	TANDEM WHEEL ASSEMBLY	–	WORLD IND. PRODUCTS INTL.
27	10–0018XX	1	STANDARD SLIDE SET LOCK	–	WORLD IND. PRODUCTS INTL.
28	–	1	LOCK KEEPER	–	–
29	–	–	DOOR BUMPER	–	1" DIA. X 3/4" LONG
30	–	–	–	–	–
31	#10 X 1–1/2"	2/ PANEL	PANEL ASSBY. SCREWS	ST/ST	–
32	#10 X 1"	2/ CORNER	FRAME ASSBY. SCREWS	–	–
33	–	2	4–1/4" X .060" X 6" LONG PLATE	ALUMINUM	AT FRAME JAMB BOTTOM
34	–	–	5/8" X 1–1/2" X .1" PLATE @ LOCK STILE BOTTOM	ALUMINUM	FASTENED WITH #8 X 3/8" FH SMS

APPROVED AS COMPLYING WITH THE
SOUTH FLORIDA BUILDING CODE
DATE February 7, 2002
BY: [illegible]
PRODUCT CONTROL DIVISION
BUILDING CODE COMPLIANCE OFFICE
ACCEPTANCE NO. 01-0927.04

Engr: DR. HUMAYOUN FAROOQ
STRUCTURES
FLA. PE # 10557

JAN 1 5 2002

AL-FAROOQ CORPORATION
ENGINEERS, PLANNERS & PRODUCT DESIGN
1235 SW 87 AVE
MIAMI, FLORIDA 33174
TEL. (305) 264-8100 FAX. (305) 262-6978
COMP-ANL\W01-54RC

SERIES-2400ST ALUM SLD. GLASS DOOR (S.M.)

R.C. ALUMINUM INDUSTRIES INC.
2805 N.W. 75 TH AVE.
MIAMI, FL. 33122
TEL. (305) 592-1515 FAX. (305) 592-2184

revisions:

no	date	by	description

date: 08-17-01
scale: 1/2"=1'-0"
dr. by: HAMID
chk. by:

drawing no. W01-54

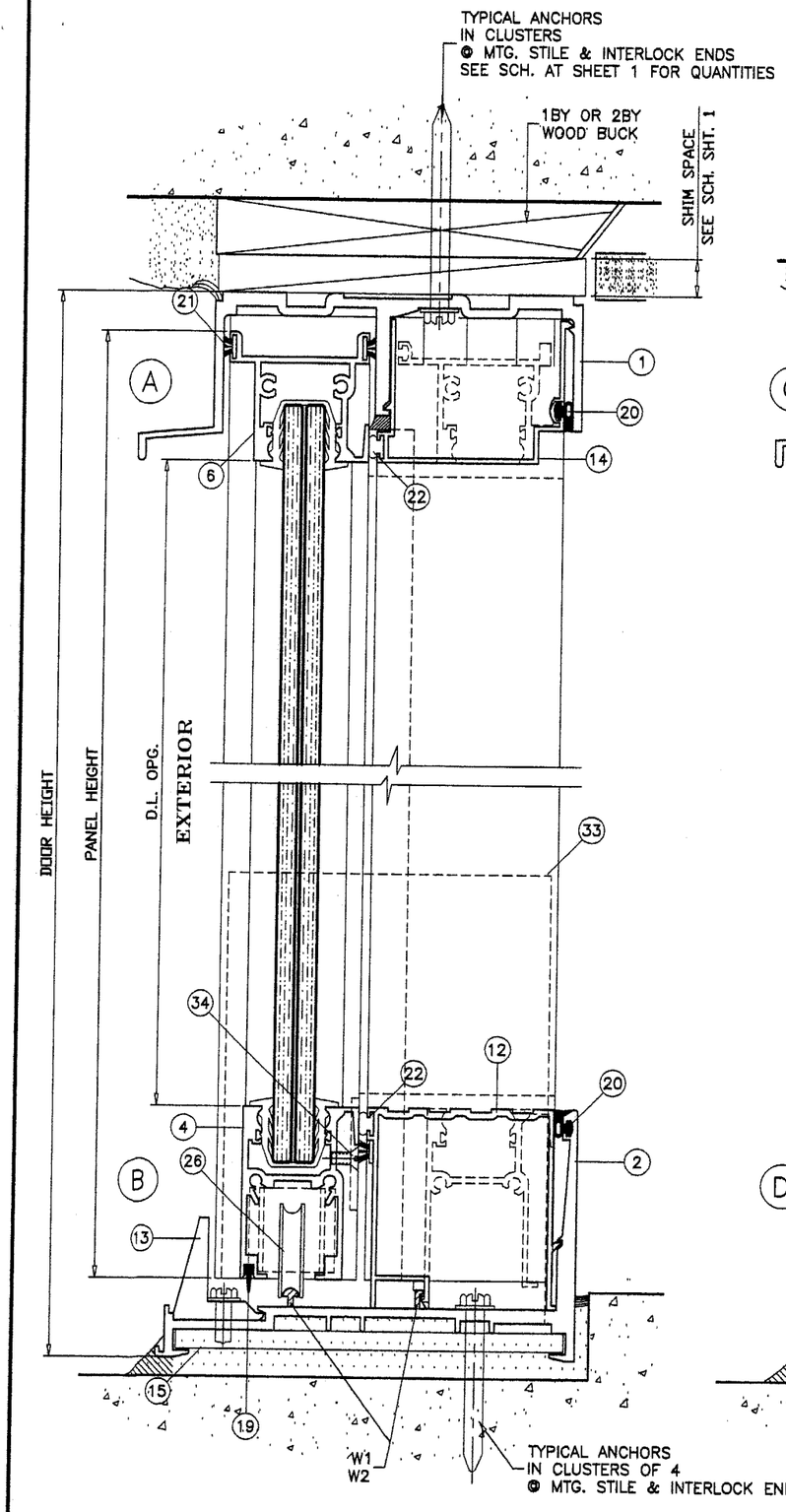

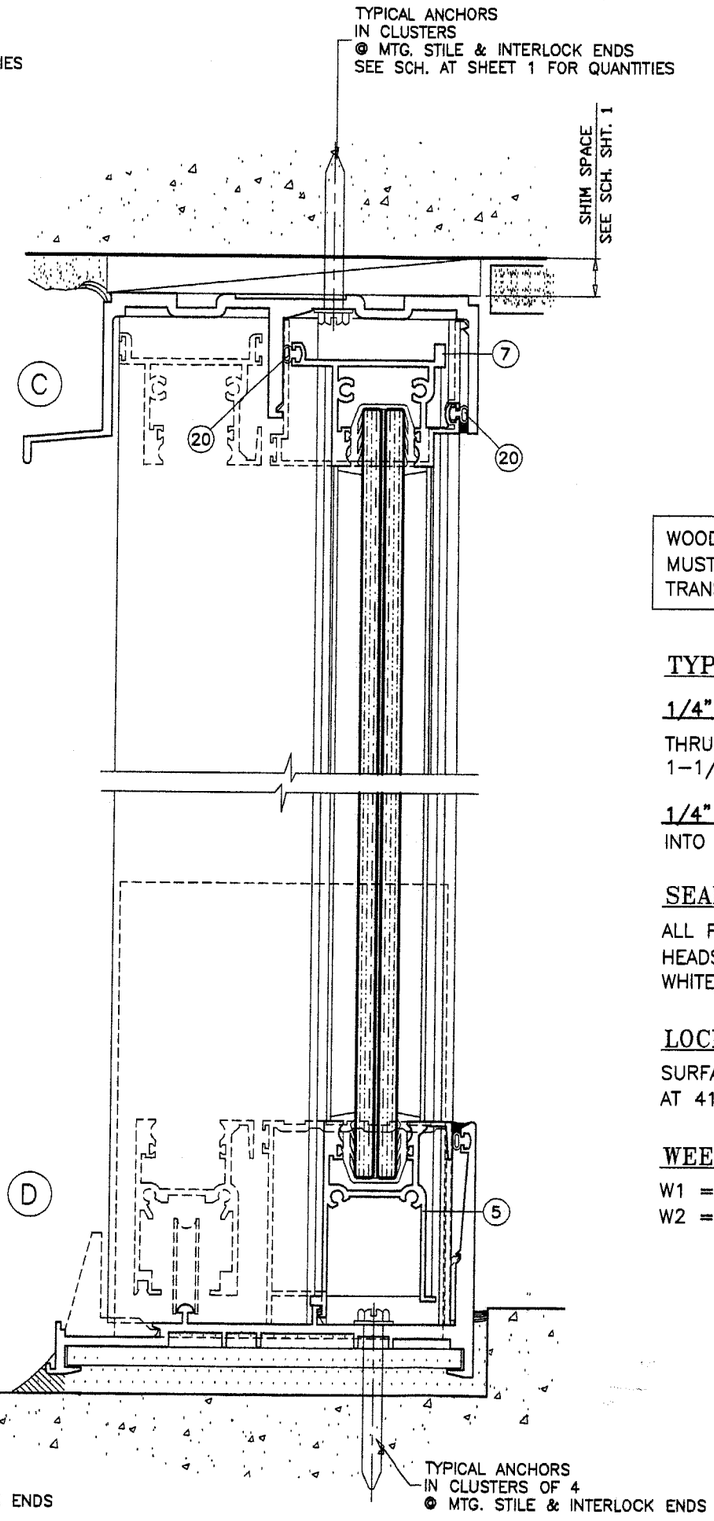

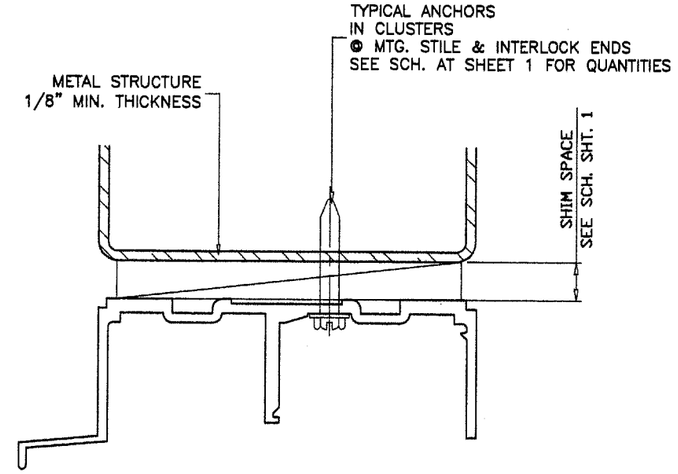

WOOD BUCKS AND METAL STRUCTURES NOT BY RC ALUMINUM MUST SUPPORT LOADS IMPOSED BY GLAZING SYSTEM AND TRANSFER THEM TO THE BUILDING STRUCTURE.

TYPICAL ANCHORS: SEE ELEV. FOR SPACING

1/4" DIA. KWIK-CON II

THRU WOOD BUCKS INTO MASONRY OR DIRECTLY INTO MASONRY
1-1/4" MIN. EMBED INTO CONC. OR MASONRY

1/4" TEKS OR SELF DRILLING SCREWS

INTO METAL STRUCTURES (STEEL OR ALUMINUM 1/8" MIN. THICKNESS)

SEALANTS:

ALL FRAME AND PANEL JOINT, INSTALLATION SCREWS AND HEADS OF ANCHOR SCREWS AT SILL TO BE SEALED WITH WHITE/ALUM COLORED SEALANT.

LOCKS:

SURFACE MOUNT THREE PLY HOOK LOCK BY 'WORLD INDUSTRIAL PRODUCTS' AT 41-1/2" FROM BOTTOM WITH KEEPERS AT LOCK POSITION.

WEEPS:

W1 = 2-1/2" WEEP NOTCH AT SILL CENTER
W2 = 1" NOTCH AT EACH END

APPROVED AS COMPLYING WITH THE SOUTH FLORIDA BUILDING CODE
DATE February 7, 2007
BY
PRODUCT CONTROL DIVISION
BUILDING CODE COMPLIANCE OFFICE
ACCEPTANCE NO. 01-0927.04

Engr: DR. HUMAYOUN FAROOQ
STRUCTURES
FLA. PE # 16557

JAN 1 5 2002

AL-FAROOQ CORPORATION
ENGINEERS, PLANNERS & PRODUCT DESIGN
1235 SW 87 AVE
MIAMI, FLORIDA 33174
TEL. (305) 264-8100 FAX. (305) 262-6978

COMP-ANL\W01-54RC

SERIES-2400ST ALUM SLD. GLASS DOOR (S.M.)

R.C. ALUMINUM INDUSTRIES INC.
2805 N.W. 75 TH AVE.
MIAMI, FL. 33122
TEL. (305) 592-1515 FAX. (305) 592-2184

revisions:			
no	date	by	description

date: 08-17-01
scale: 1/2" = 1"
dr. by: HAMID
chk. by:

drawing no. W01-54

WOOD BUCKS AND METAL STRUCTURES NOT BY RC ALUMINUM MUST SUPPORT LOADS IMPOSED BY GLAZING SYSTEM AND TRANSFER THEM TO THE BUILDING STRUCTURE.

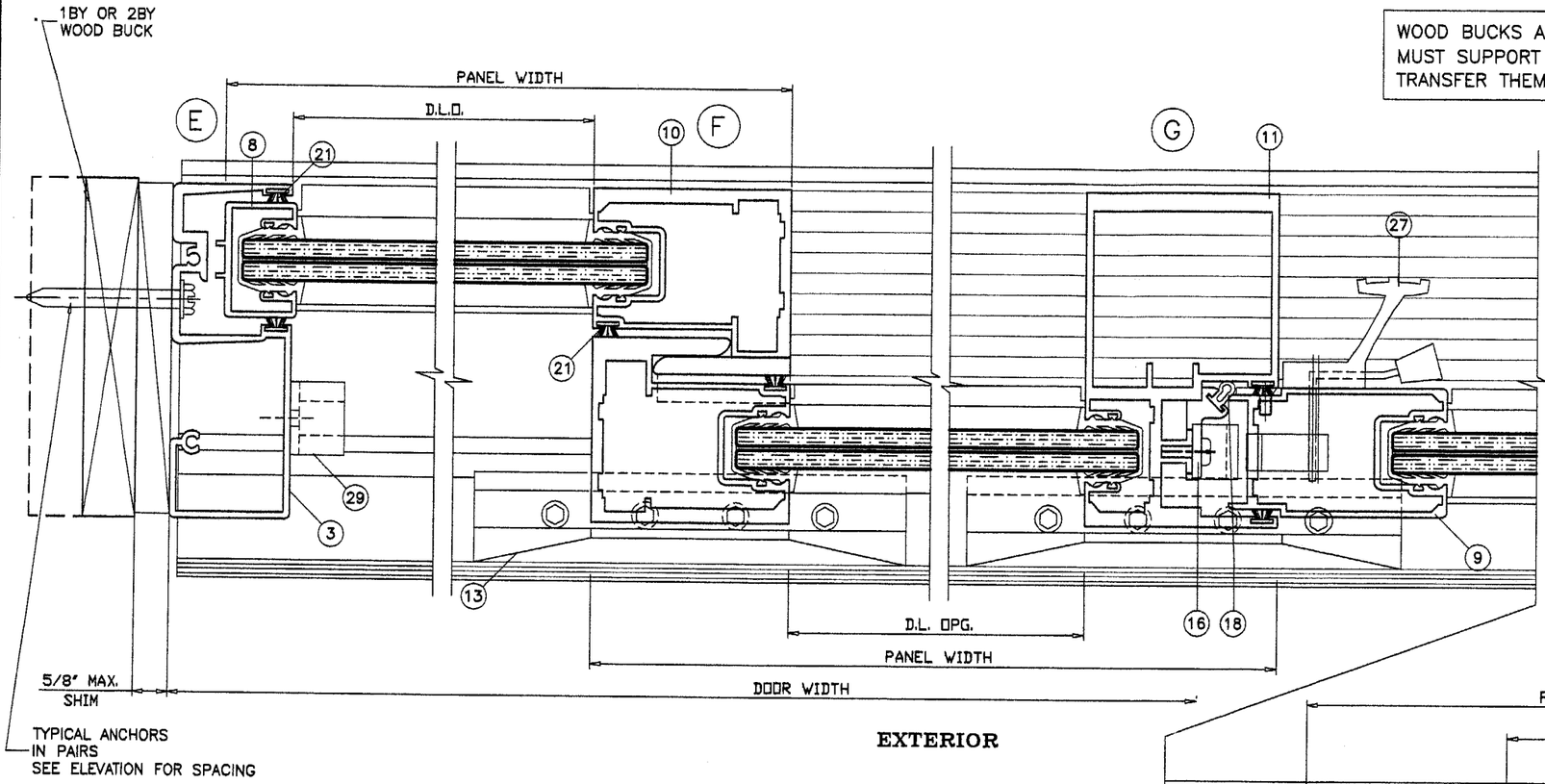

EXTERIOR

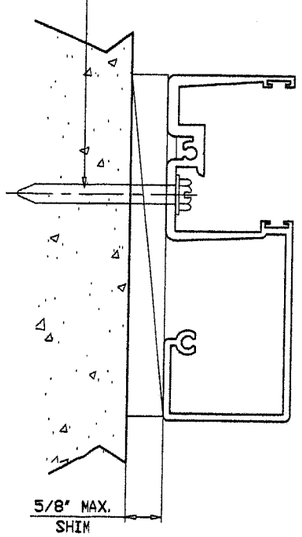

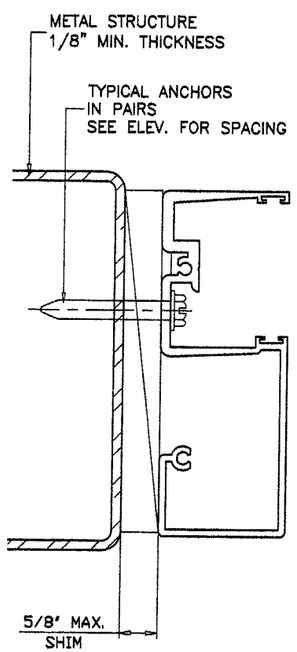

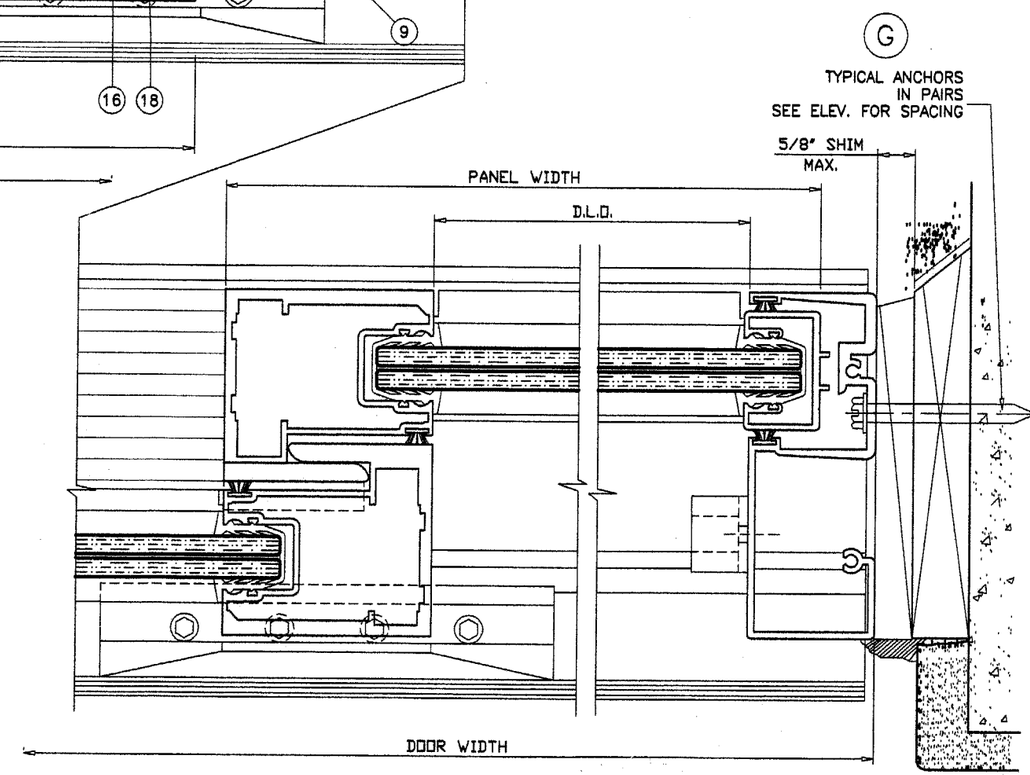

APPROVED AS COMPLYING WITH THE SOUTH FLORIDA BUILDING CODE
DATE February 7, 2002
BY
PRODUCT CONTROL DIVISION
BUILDING CODE COMPLIANCE OFFICE
ACCEPTANCE NO. 01-0927.04

Engr: DR. HUMAYOUN FAROOQ
STRUCTURES
FLA. PE # 16557

JAN 1 5 2002

AL-FAROOQ CORPORATION
ENGINEERS, PLANNERS & PRODUCT DESIGN
1235 SW 87 AVE
MIAMI, FLORIDA 33174
TEL (305) 264-8100 FAX. (305) 262-6978

COMP-ANL\W01-54RC

SERIES-2400ST ALUM SLD. GLASS DOOR (S.M.)

R.C. ALUMINUM INDUSTRIES INC.
2805 N.W. 75 TH AVE.
MIAMI, FL. 33122
TEL. (305) 592-1515 FAX. (305) 592-2184

revisions:

no	date	by	description

date: 08-17-01
scale: 1/2" = 1"
dr. by: HAMID
chk. by:

drawing no. W01-54

sheet 4 of 6

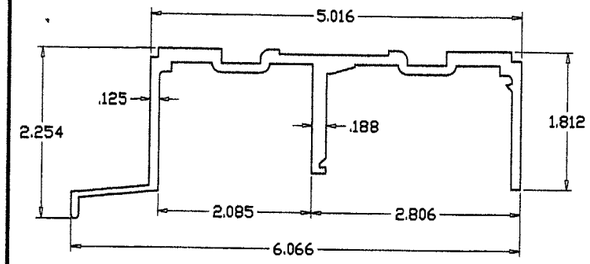

FRAME HEAD

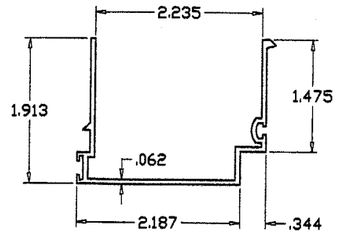

HEAD ADAPTER

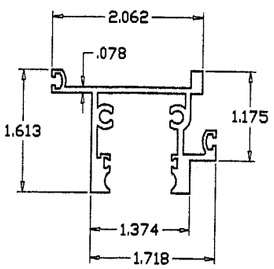

FIX. TOP RAIL

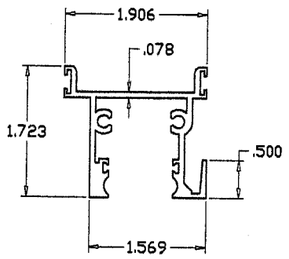

MOV. TOP RAIL

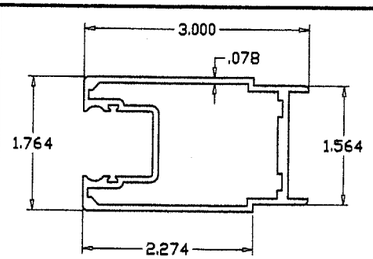

LOCK STILE

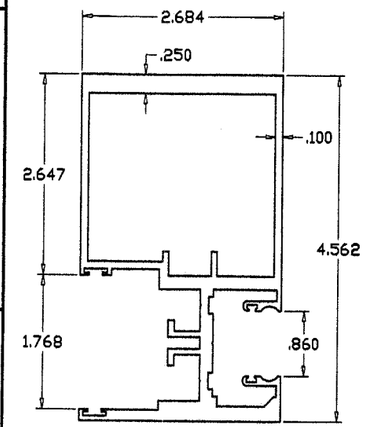

MTG. STILE

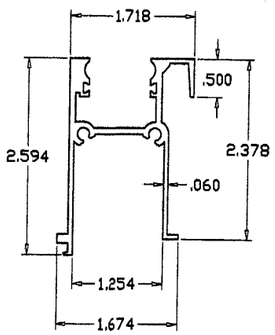

FIX. BOTTOM RAIL

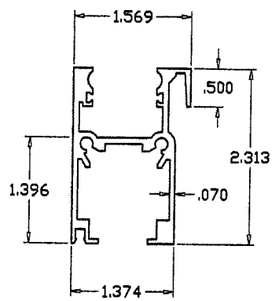

MOVING BOTTOM RAIL

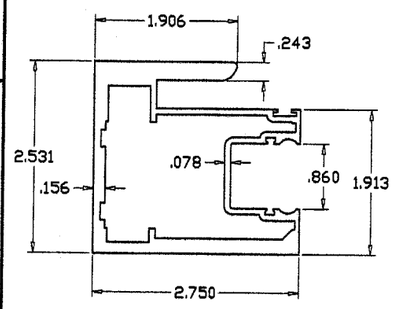

INTERLOCK

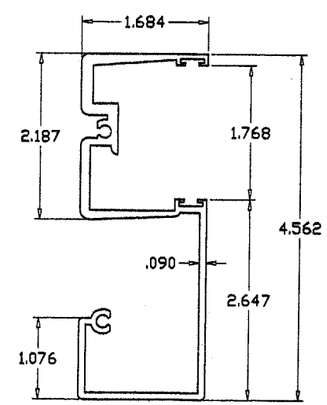

FRAME JAMB

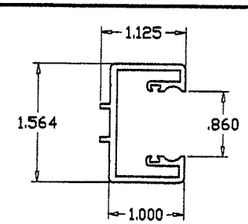

FIXED STILE

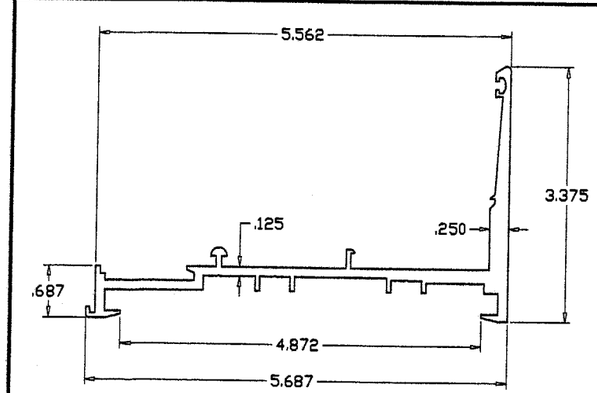

FRAME SILL

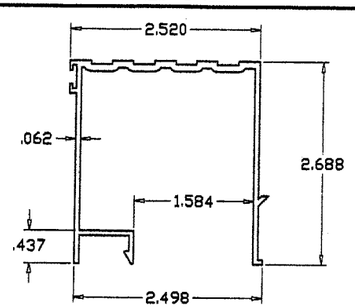

THRESHOLD

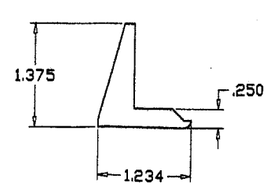

SILL ANCHOR

APPROVED AS COMPLYING WITH THE
SOUTH FLORIDA BUILDING CODE
DATE February 7, 2002
BY
PRODUCT CONTROL DIVISION
BUILDING CODE COMPLIANCE OFFICE
ACCEPTANCE NO. 01-0927.04

Engr: DR. HUMAYOUN FAROOQ
STRUCTURES
FLA. PE # 16557

JAN 1 5 2002

AL-FAROOQ CORPORATION
ENGINEERS, PLANNERS & PRODUCT DESIGN
1235 SW 87 AVE
MIAMI, FLORIDA 33174
TEL. (305) 264-8100 FAX. (305) 262-6978
COMP-ANL\W01-54RC

SERIES-2400ST ALUM SLD. GLASS DOOR (S.M.)

R.C. ALUMINUM INDUSTRIES INC.
2805 N.W. 75 TH AVE.
MIAMI, FL. 33122
TEL. (305) 592-1515 FAX. (305) 592-2184

revisions:			
no	date	by	description

date: 08-17-01
scale: 1/2" = 1"
dr. by: HAMID
chk. by:

drawing no.
W01-54

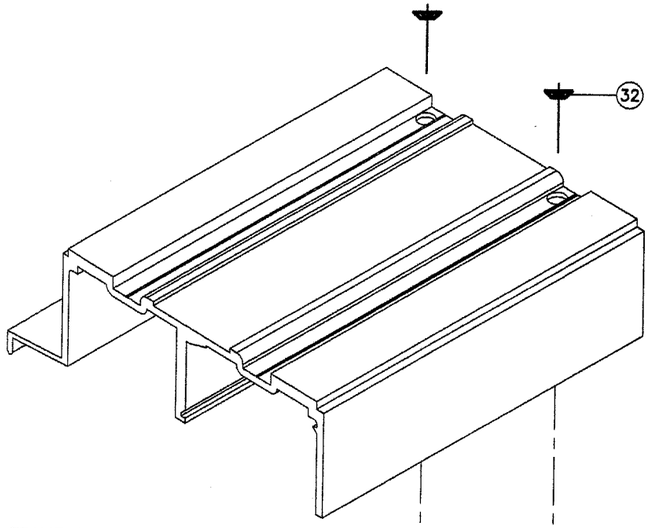

FRAME TOP CORNER

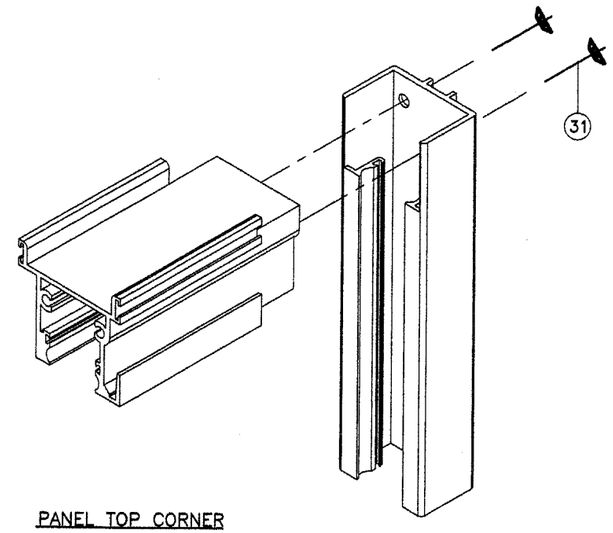

PANEL TOP CORNER

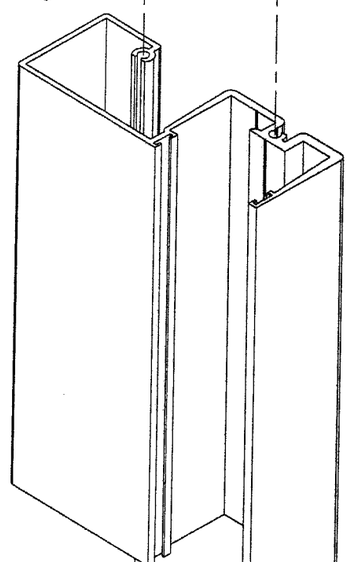

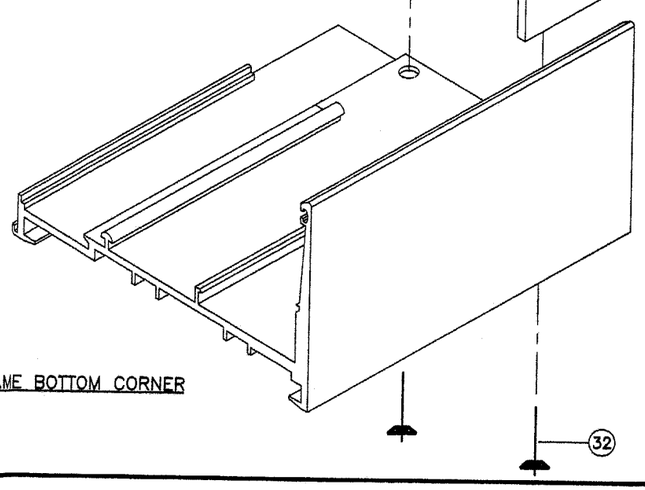

FRAME BOTTOM CORNER

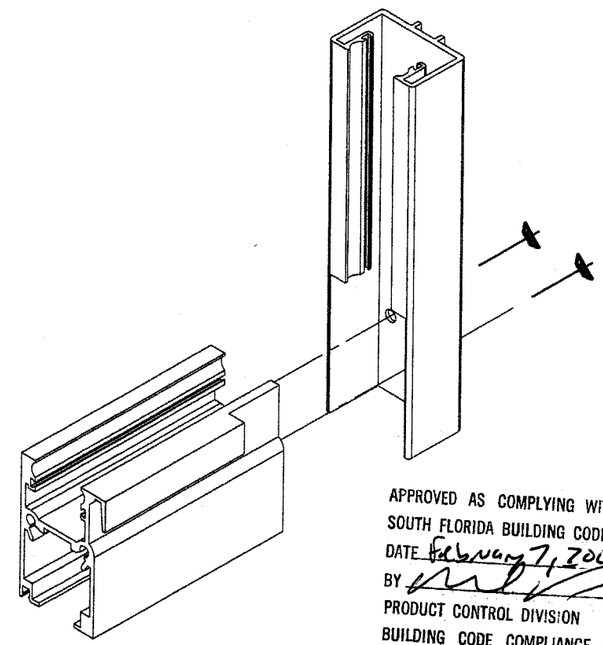

PANEL BOTTOM CORNER

APPROVED AS COMPLYING WITH THE
SOUTH FLORIDA BUILDING CODE
DATE February 7, 2002
BY
PRODUCT CONTROL DIVISION
BUILDING CODE COMPLIANCE OFFICE
ACCEPTANCE NO. 01-0927.04

Engr: DR. HUMAYOUN FAROOQ
STRUCTURES
FLA. PE # 16557

JAN 1 5 2002

SERIES-2400ST ALUM SLD. GLASS DOOR (S.M.)

R.C. ALUMINUM INDUSTRIES INC.
2805 N.W. 75 TH AVE.
MIAMI, FL. 33122
TEL. (305) 592-1515 FAX. (305) 592-2184

AL-FAROOQ CORPORATION
ENGINEERS, PLANNERS & PRODUCT DESIGN
1235 SW 87 AVE
MIAMI, FLORIDA 33174
TEL. (305) 264-8100 FAX. (305) 262-6978

COMP-ANL\W01-54RC

revisions:

no	date	by	description

date: 08-17-01
scale: 1/2" = 1"
dr. by: HAMID
chk. by:

drawing no.
W01-54

sheet 6 of 6