MIAMI-DADE

MIAMI-DADE COUNTY, FLORIDA
METRO-DADE FLAGLER BUILDING

BUILDING CODE COMPLIANCE OFFICE
METRO-DADE FLAGLER BUILDING
140 WEST FLAGLER STREET, SUITE 1603
MIAMI, FLORIDA 33130-1563
(305) 375-2901 FAX (305) 375-2908

CONTRACTOR LICENSING SECTION
(305) 375-2527 FAX (305) 375-2558

CONTRACTOR ENFORCEMENT DIVISION
(305) 375-2966 FAX (305) 375-2908

PRODUCT CONTROL DIVISION
(305) 375-2902 FAX (305) 372-6339

PRODUCT CONTROL NOTICE OF ACCEPTANCE

Stanley Door Systems
7300 Reames Rd.
Charlotte ,NC 28216

Your application for Notice of Acceptance (NOA) of:
"Sta-Tru" W/E 8'0 Out-swing Glazed Res. Ins. Steel Door w/wo Sidelites
under Chapter 8 of the Code of Miami-Dade County governing the use of Alternate Materials and Types of Construction, and completely described herein, has been recommended for acceptance by the Miami-Dade County Building Code Compliance Office (BCCO) under the conditions specified herein.

This NOA shall not be valid after the expiration date stated below. BCCO reserves the right to secure this product or material at any time from a jobsite or manufacturer's plant for quality control testing. If this product or material fails to perform in the approved manner, BCCO may revoke, modify, or suspend the use of such product or material immediately. BCCO reserves the right to revoke this approval, if it is determined by BCCO that this product or material fails to meet the requirements of the South Florida Building Code.

The expense of such testing will be incurred by the manufacturer.

ACCEPTANCE NO.: 01-0928.08
EXPIRES: 11/01/2006

Raul Rodriguez
Chief Product Control Division

THIS IS THE COVERSHEET, SEE ADDITIONAL PAGES FOR SPECIFIC AND GENERAL CONDITIONS
BUILDING CODE & PRODUCT REVIEW COMMITTEE

This application for Product Approval has been reviewed by the BCCO and approved by the Building Code and Product Review Committee to be used in Miami-Dade County, Florida under the conditions set forth above.

Francisco J. Quintana, R.A.
Director
Miami-Dade County
Building Code Compliance Office

APPROVED: 11/01/2001

Stanley Door Systems

ACCEPTANCE No.: 01-0928.08

APPROVED : November 01, 2001

EXPIRES : November 01, 2006

NOTICE OF ACCEPTANCE: SPECIFIC CONDITIONS

1. SCOPE

1.1 This **renews** the Notice of Acceptance No. **01-0226.02**, which was issued on April 19, 2001 It approves a residential insulated steel door, as described in Section 2 of this Notice of Acceptance, designed to comply with the South Florida Building Code (SFBC), 1994 Edition for Miami-Dade County, for the locations where the pressure requirements, as determined by SFBC Chapter 23, do not exceed the Design Pressure Rating values indicated in the approved drawings.

2. PRODUCT DESCRIPTION

2.1 The **Series "Sta-Tru" W/E 8' 0" Outswing Glazed Residential Insulated Steel Doors w/wo Sidelites** and its components shall be constructed in strict compliance with the following documents: Drawing No. **39638** titled "Stanley Outswing Glazed 11-4 x 8-0 Door-W/ & W/O Sidelites" Sheets 1 through 7 of 7, dated 6/2/00 and last revised on 3-10-2001, prepared by R.W Building Consultants, Inc., bearing the Miami-Dade County Product Control approval stamp with the Notice of Acceptance number and approval date by the Miami-Dade County Product Control Division. These documents shall hereinafter be referred to as the approved drawings.

3. LIMITATIONS

3.1 This approval applies to single unit applications of pair of doors and single door with or without sidelites, as shown in approved drawings. Single door units shall include all components described in the active leaf of this approval.

4. INSTALLATION

4.1 The residential insulated steel door and its components shall be installed in strict compliance with the approved drawings.

4.2 Hurricane protection system (shutters): the installation of this unit **will require** a hurricane protection system.

5. LABELING

5.1 Each unit shall bear a permanent label with the manufacturer's name or logo, city, state and following statement: "Miami-Dade County Product Control Approved".

6. BUILDING PERMIT REQUIREMENTS

6.1 Application for building permit shall be accompanied by copies of the following:

- **6.1.1** This Notice of Acceptance
- **6.1.2** Duplicate copies of the approved drawings, as identified in Section 2 of this Notice of Acceptance, clearly marked to show the components selected for the proposed installation.
- **6.1.3** Any other documents required by the Building Official or the South Florida Building Code (SFBC) in order to properly evaluate the installation of this system.

Ishaq I. Chanda

Ishaq I. Chanda, P.E. Product Control Examiner
Product Control Division

Stanley Door Systems

ACCEPTANCE No.: 01-0928.08

APPROVED : November 01, 2001

EXPIRES : November 01, 2006

NOTICE OF ACCEPTANCE: STANDARD CONDITIONS

1. Renewal of this Acceptance (approval) shall be considered after a renewal application has been filed and the original submitted documentation, including test supporting data, engineering documents, are no older than eight (8) years.

2. Any and all approved products shall be permanently labeled with the manufacturer's name, city, state, and the following statement: "Miami-Dade County Product Control Approved", or as specifically stated in the specific conditions of this Acceptance.

3. Renewals of Acceptance will not be considered if:
   a) There has been a change in the South Florida Building Code affecting the evaluation of this product and the product is not in compliance with the code changes;
   b) The product is no longer the same product (identical) as the one originally approved;
   c) If the Acceptance holder has not complied with all the requirements of this acceptance, including the correct installation of the product;
   d) The engineer who originally prepared, signed and sealed the required documentation initially submitted is no longer practicing the engineering profession.

4. Any revision or change in the materials, use, and/or manufacture of the product or process shall automatically be cause for termination of this Acceptance, unless prior written approval has been requested (through the filing of a revision application with appropriate fee) and granted by this office.

5. Any of the following shall also be grounds for removal of this Acceptance:
   a) Unsatisfactory performance of this product or process.
   b) Misuse of this Acceptance as an endorsement of any product, for sales, advertising or any other purpose.

6. The Notice of Acceptance number preceded by the words Miami-Dade County, Florida, and followed by the expiration date may be displayed in advertising literature. If any portion of the Notice of Acceptance is displayed, then it shall be done in its entirety.

7. A copy of this Acceptance as well as approved drawings and other documents, where it applies, shall be provided to the user by the manufacturer or its distributors and shall be available for inspection at the job site at all time. The engineer need not reseal the copies.

8. Failure to comply with any section of this Acceptance shall be cause for termination and removal of Acceptance.

9. This Notice of Acceptance consists of pages 1, 2 and this last page 3.

Ishaq I. Chanda

Ishaq I. Chanda, P.E. Product Control Examiner
Product Control Division

END OF THIS ACCEPTANCE

Stanley Door Systems

ACCEPTANCE No.: 01-0928.08

APPROVED : November 01, 2001

EXPIRES : November 01, 2006

NOTICE OF ACCEPTANCE: EVIDENCE SUBMITTED

(For File ONLY. Not part of NOA)

A. DRAWINGS (Transferred from file#**01-0226.02**)

1. Manufacturer's die drawings and sections.
2. Drawing No. **39638** titled "Stanley Outswing Glazed 11-4 x 8-0 Door-W/ & W/O Sidelites" Sheets 1 through 7 of 7, dated 6/2/00 and last revised on 3-10-2001, prepared by R.W Building Consultants, Inc.

B. TESTS(Transferred from file#**01-0226.01**)

1. Test reports on 1) Air Infiltration Test, per PA 202-94
   2) Uniform Static Air Pressure Test, Loading per PA 202-94
   3) Water Resistance Test, per PA 202-94
   4) Forced Entry Test, per SFBC 3603.2 (b) and PA 202-94

   along with manufacturer's installation, parts and section drawings marked up by Certified Testing Laboratories, Test Report No. **CTLA 554W** dated 06-06-00, all signed and sealed by Ramesh C. Patel, P. E.

C. CALCULATIONS(Transferred from file#**01-0226.01**)

1. Anchor Calculations and structural analysis dated 05-30-00, prepared, signed and sealed by Mark C. Fetherman, P.E.

D. MATERIAL CERTIFICATIONS(Transferred from file#**01-0226.01**)

1. Photocopy of **4500 Hours** Xenon Arch tensile test report No. **ETC-00-417-10343.0** dated 09-11-01, issued by ETC laboratories Inc. for **GE ASA Polycarbonate plastic**, controlled & **4500 Hours** xenon Arch exposed samples to Stanley Doors, tested per ASTM D-63896a, signed and sealed by Joseph L. Donald. (**original test report in file #01-0928.07**)
2. Photo copy Test report No. **ETC-00-417-10343.0** dated 03-07-01, issued by ETC laboratories Inc. for **GE ASA Polycarbonate plastic** to Stanley Door for "self ignition" per ASTM 1929D, and for" Rate of Burning" per ASTM D635-97 and for "Smoke density" per ASTMD-2843-93, all the test reports for **GE ASA Polycarbonate plastic** (original test report pending from manufacturer)
3. Photocopy **4500 Hours** Xenon Arch completed tensile test report No. **PRI00034** dated December 14, 2000, issued by PRI Asphalt Technologies to **ODL** for **Spartech Polycom PP5530-C13**, **4500 Hours** Xenon Arch exposed samples, tested per ASTM D-63896a, signed and sealed by Charles L. Thomas, P. E. (original test report pending from manufacturer)

Ishaq I. Chanda

Ishaq I. Chanda, P.E. Product Control Examiner
Product Control Division

NOTICE OF ACCEPTANCE: EVIDENCE SUBMITTED

(For File ONLY. Not part of NOA)

4. Photo copy Test reports No. 15977-104313 **(Infinity)** & 15977-104314 **(Retro)** for "Surface burning characteristics" per ASTM E-84, both dated 12-23,1998, and test report No. ETC-98-417-7209.O **(Infinity)** & test report No. ETC-98-417-7208.O **(Retro)** "self ignition temperature" per ASTMD1929-96 both dated 1-11-99 for BASF polyurethane cores, issued by Omega Point Laboratories (original in file #98-1104.03).
5. Test Report No. **114884-3** "Measuring the Density of Smoke from the Burning or Decomposition of Plastics" per ASTM D-2843-93", dated 11/24/98, all the test reports for ODL Spartech 1643.05 Filled Polypropylene Fiberglass & Mica samples (ODLI-2), issued by ***SGS U.S. Testing Co. Inc.*** signed and sealed by Joseph G. Cappetta, P.E.
6. Test Report No. MTS Job No. **520490** dated December 8, 1999 to determine tensile test properties of ODL 12-month weathered and control test specimens per ASTM **D638-96a** "Standard Test Method for Tensile Properties of Plastics", issued by Celotex Corporation Testing Services.

E. STATEMENTS

1. Statement letter of conformance, dated 05-30-00, sealed signed by Mark C. Fetherman, P.E.(original in file #00-0809.02)
2. Statement letter of no financial interest, dated 05-30-00, sealed signed by Mark C. Fetherman, P.E. (original in file #00-0809.02).
3. Letter issued by Stanley Door System dated 10-06-1999 designating Mr. Rick Wright to represent them in matters pertaining to Miami-Dade County product approvals signed by Bruce Pietrangelo (original in file #00-0809.02).
4. Letter issued by Stanley Door System designating Mr. Rick Wright to represent them in matters pertaining to Miami-Dade County product approvals signed by Doug Noznesky.
5. Statement letter signed by Rick Wright (consultant Stanley Doors) dated March 12, 2001, requesting removal of ODLI-2 (Spartech DC16403-05) lite frame from existing approval and requesting for addition of Trinity (GE ASA Polycarbonate plastic) and ODL (Spartech Polycom 5530-C13) lite frames, in the new approval.
6. Photo copy letter dated March 20, 2001 issued by SparTech Polycom certifying Spartech DC-1643.05(known as ODLI-2) same as Spartech PP5330 C13 except (identifying code "name" change), signed by Gregory F. Zeis (Technical manager).

F. OTHERS

1. This approval **renews** the Notice of Acceptance No. **01-0226.02,** with expiration date of 10-05-2001.
2. Test report for **4500 Hours** Xenon Arch tensile test for **GE ASA Polycarbonate plastic** controlled & exposed samples
3. Glazing complies with ASTM-1300-98.

Ishaq I. Chanda

Ishaq I. Chanda, P.E. Product Control Examiner
Product Control Division

STANLEY DOOR SYSTEMS

STA-TRU OUTSWING 8-0 GLAZED STEEL DOOR W/AND W/OUT SIDELITES IN A WOOD FRAME

GENERAL NOTES

1. THIS PRODUCT IS DESIGNED TO MEET THE SOUTH FLORIDA BUILDING CODE 1994 EDITION FOR MIAMI–DADE COUNTY.
2. WOOD BUCKS BY OTHERS, MUST BE ANCHORED PROPERLY TO TRANSFER LOADS TO THE STRUCTURE.
3. PRODUCT ANCHORS SHALL BE AS LISTED AND SPACED AS SHOWN ON DETAILS. ANCHOR EMBEDMENT TO BASE MATERIAL SHALL BE BEYOND WALL DRESSING OR STUCCO.
4. MIAMI–DADE APPROVED IMPACT RESISTANT SHUTTERS ARE REQUIRED.
5. DESIGN PRESSURE RATING SEE TABLES PAGE 1.
6. SIDELITES ARE AN OPTION AND CAN BE IN A SINGLE OR DOUBLE DOOR CONFIGURATION.

RESIDENTIAL INSULATED STEEL DOOR
(Common to all frame conditions)

Door Panel & Sidelite Construction:

Face sheets: 24 GA.(0.021")minimum thickness, Galvanized steel A–525 commercial quality – AKDQ per ASTM 620 with yield strength Fy(min.)=41,949 psi

Core design: Polyurethane foam core, with 1.7 lbs. density by BASF.

Door Panel Construction: Glazed type. The vertical edges of the skin are flush and glued to the top and bottom finger jointed pine stiles. The horizontal edges of the panel skin are roll formed over the finger jointed hinge stile and LVL latch stile to form a mechanical lock. The panels are sandwich glazed using a two piece polypropylene lite frame with mitered & welded corners.

Sidelite Panel Construction: The vertical edges of the skin are flush and glued to the top and bottom finger jointed pine stiles. The horizontal edges of the panel skin are roll formed over the finger jointed side stiles to form a mechanical lock. Panels are sandwich glazed using a two piece plastics lite frame with mitered & welded corners.

TABLE OF CONTENTS

SHEET #	DESCRIPTION
1	COMMON (GENERAL NOTES, TYPICAL ELEVATION)
2	VERTICAL CROSS SECTIONS & BILL OF MATERIALS
3	HORIZONTAL CROSS SECTIONS
4	HORIZONTAL CROSS SECTIONS & DOOR MODELS
5	ANCHORING LOCATIONS & DETAILS
6	ANCHORING LOCATIONS & GLAZING DETAILS
7	COMPONENTS

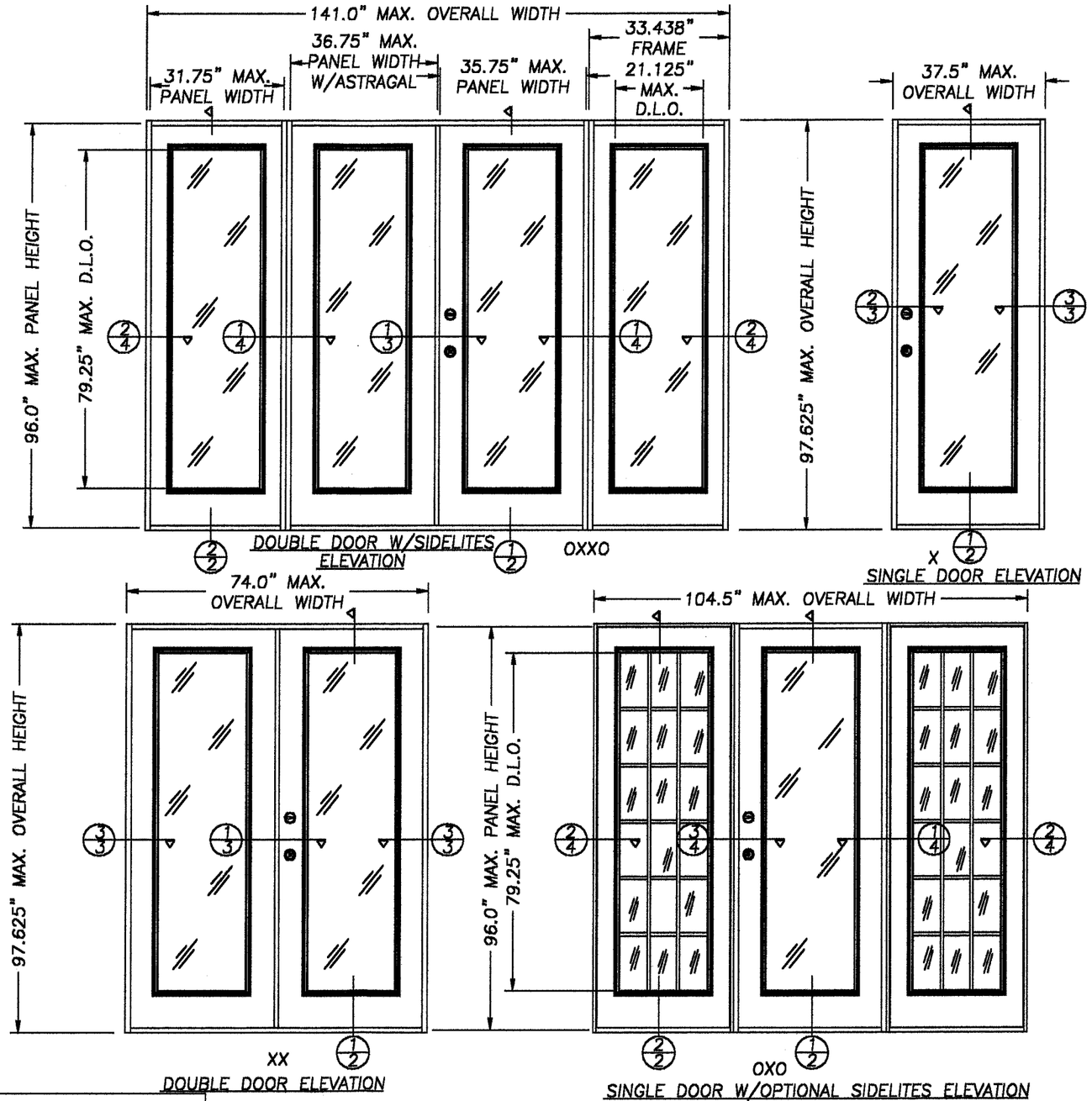

DESIGN PRESSURE RATING	
UNIT TYPE	WHERE WATER INFILTRATION REQUIREMENT IS NEEDED
SINGLE	+50.0 –50.0 PSF
SINGLE W/SIDELITES	+50.0 –50.0 PSF

DESIGN PRESSURE RATING		
UNIT TYPE	WHERE WATER INFILTRATION REQUIREMENT IS NEEDED	
	W/IMPERIAL AST.	W/MINDJAMBER // AST.
DOUBLE	+50.0 –44.0 PSF	+50.0 –50.0 PSF
DOUBLE WITH SIDELITES	+50.0 –44.0 PSF	+50.0 –50.0 PSF

ALL DOOR MODELS ARE VIEWED FROM THE INTERIOR SIDE (OUTSWING DOORS)

PRODUCT RENEWED
ACCEPTANCE No. 01-0928.08
EXPIRATION DATE NOVEMBER 01, 2006
By Shag J. Chanda
PRODUCT CONTROL DIVISION
BUILDING CODE COMPLIANCE OFFICE

APPROVED AS COMPLYING WITH THE SOUTH FLORIDA BUILDING CODE
DATE APRIL 19, 2001
BY Maxwell Chang
PRODUCT CONTROL DIVISION
BUILDING CODE COMPLIANCE OFFICE
ACCEPTANCE NO. 01-0226.02

STANLEY
STANLEY DOOR SYSTEMS
7300 REAMES ROAD
CHARLOTTE, NC 28216
PH. (704) 921-3470

PRODUCT: STANLEY OUTSWING GLAZED 11-4 x 8-0 WOODEDGE DOOR W/& W/O SIDELITES

PART OR ASSEMBLY: ELEVATIONS AND GENERAL NOTES

NO.	DATE	REVISIONS	BY
3	3/10/01	CORRECT B.O.M.	RW
2	1/18/01	ADD ASA MATERIAL	RW
1	12/11/00	GENERAL REVISION	TJH

RW BUILDING CONSULTANTS, INC.
813.684.3831

DATE: 6/2/00
SCALE: N.T.S.
DWG. BY: TJH
CHK. BY: RW
DRAWING NO.: 39638
SHEET 1 OF 7

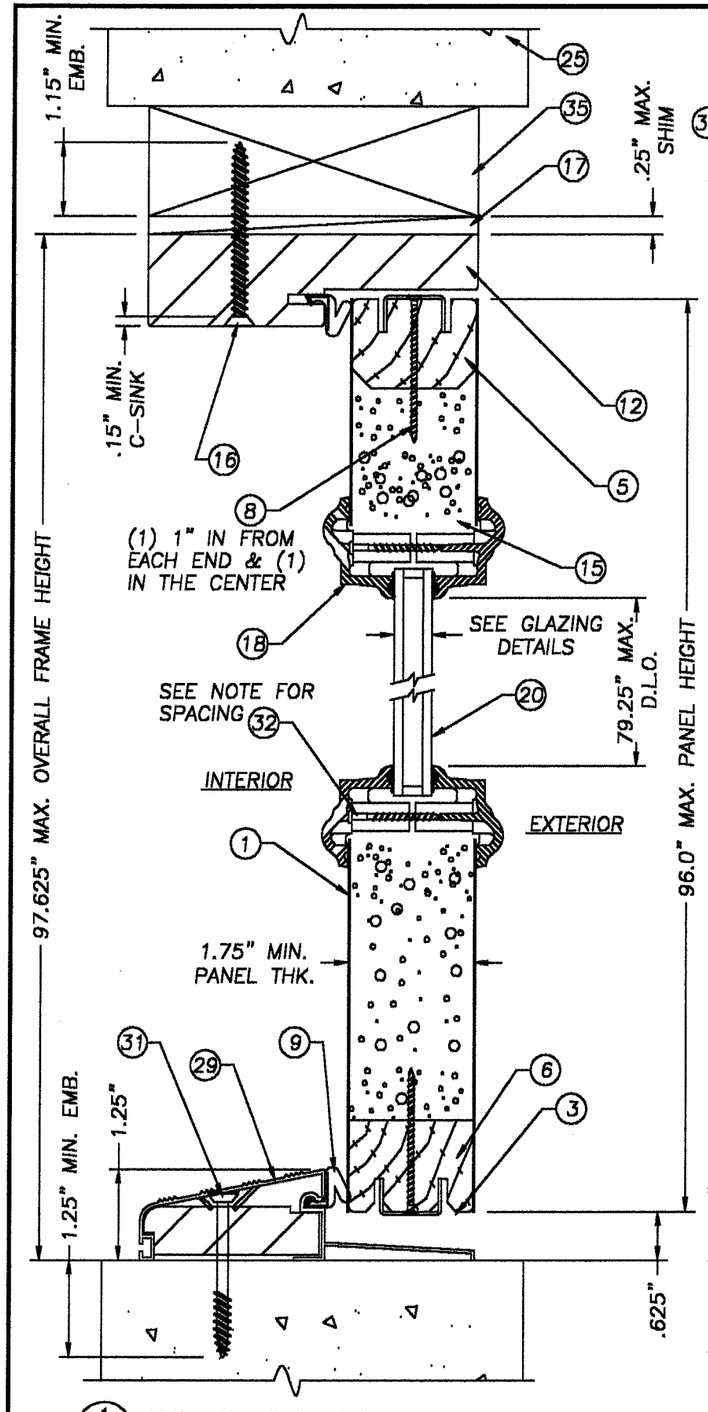

1/2 VERTICAL CROSS SECTION DOOR PANEL

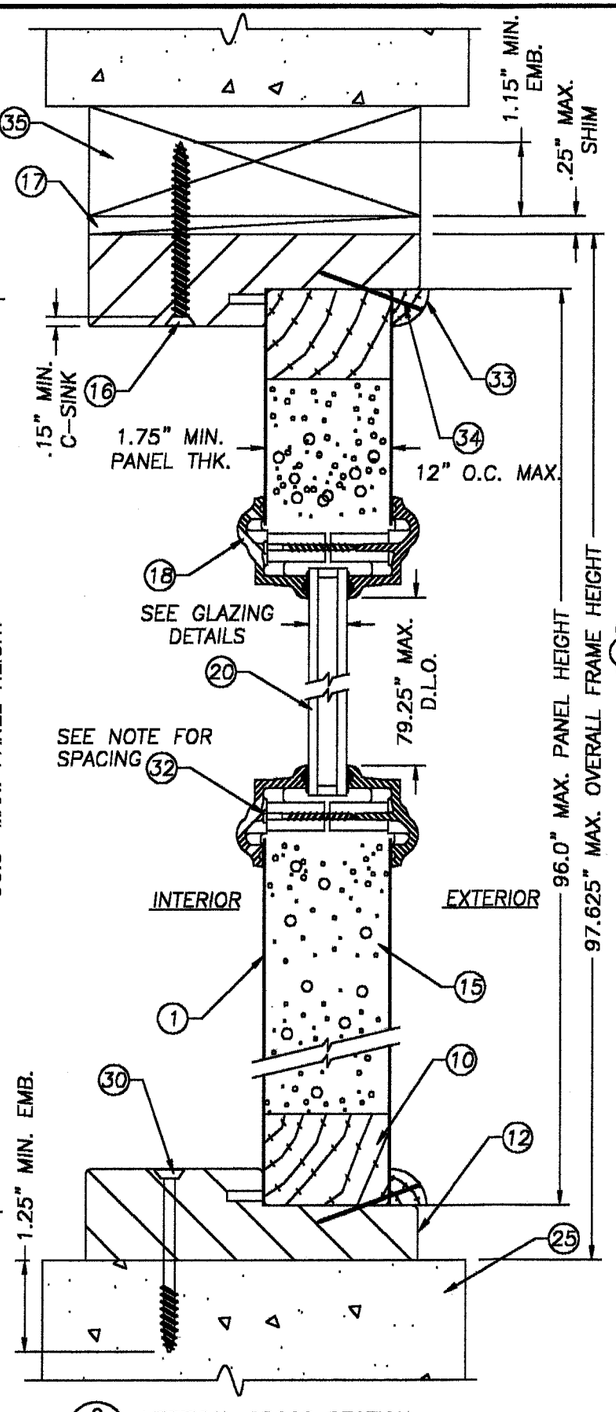

2/2 VERTICAL CROSS SECTION SIDELITE

ITEM	DESCRIPTION	MATERIAL
1	DOORSKIN (.021" MIN. STEEL)	STEEL
2	1.68" x 4.0" LATCH STILE	LVL
3	DOOR PANEL TOP & BOTTOM REIN. (.040" THK.)	STEEL
4	1.68"X1.22" HINGE STILE (PONDEROSA PINE)	PINE
5	1.68"X1.22" TOP RAIL (PONDEROSA PINE)	PINE
6	1.68"X1.00" BOTTOM RAIL (PONDEROSA PINE)	PINE
7	HINGES 4" X 4" X .088 WT. (STANLEY)	STEEL
8	#6 x 2" PHILLIPS FLAT HEAD SCREW	STEEL
9	COMPRESSION WEATHERSTRIP (SCHLEGAL QDS 650) MAGNETIC WEATHERSTRIP (HOLMES)	FOAM
10	SIDELITE TOP & BOTTOM RAIL (PONDEROSA PINE)	PINE
11	SIDELITE BLANK JAMB (PONDEROSA PINE)	PINE
12	HEAD JAMB (PONDEROSA PINE)	PINE
13	HINGE JAMB (PONDEROSA PINE)	PINE
14	LATCH JAMB (PONDEROSA PINE)	PINE
15	POLYURETHANE FOAM CORE (BASF) TYPE A. INFINITY: RESIN (P14120R) ISOCYANATE (P1001), CYCLOPENTANE. TYPE B. RETRO: RESIN (P12430R), ISOCYANATE (P1036).	
16	#8 x 2 1/2" PFH WS	STEEL
17	1/4" SHIM MATERIAL	–
18	LITE FRAME (ODL Spartech Polycom PP5530 C13) LITE FRAME (Trinity GE ASA Polycarbonate) (SEE GLAZING DETAILS SHEET 6 OF 7)	POLYPROP. ASA
19	GLAZING COMPOUNDS – SILICONE CAULK (GE WINDOW & DOOR, NOVAGARD) – LATEX SEALANT LIQUID NAIL	SILICONE LATEX
20	GLASS – 1/2" AND 1" INSULATED (SEE GLAZING DETAILS SHEET 6 OF 7)	
21	KWIKSET 660 DEADBOLT	–
22	KWIKSET SERIES 200 DL PASSAGE	
23	#8 x 2" PFH WOOD SCREW	STEEL
25	MASONRY	CONCRETE
26	GLAZING TAPE (VENTURE TAPE .30" W. x .037" THK.) GLAZING COMPOUND LIQUID NAIL LATEX SEALANT GLAZING COMPOUND SILICONE CAULK (NOVAGARD)	FOAM LATEX SILICONE
27	#9 x 1.00 F.H. WD SCREWS	STEEL
28	#8 x 2" P.H. WD SCREWS	STEEL
29	BUMP THRESHOLD	ALUMINUM
30	3/16" TAPCON (ITW) OR 3/16" (ELCO) 2 1/2" LG.	STEEL
31	3/16" TAPCON (ITW) OR 3/16" (ELCO) 2 1/4" LG.	STEEL
32	#8-1 1/4" TEK SCREW (LITE FRAME SCREW)	STEEL
33	GLAZING STOP QUARTER ROUND (1/2" x 1/2")	PINE
34	BRAD TRIM NAIL 2" LG. (12" MAX. O.C. SPACING)	STEEL
35	2X BUCK	WOOD
36	OPTIONAL EXTRUDED ALUMINUM ASTRAGAL (IMPERIAL)	ALUM.
37	1.68"X1.22" BLANK STILE (PONDEROSA PINE)	PINE
38	ASTRAGAL EXTRUDED ALUM. (WR80S *WINDJAMBER II*)	ALUM.

NOTE: SPACING FOR ITEM #32; TOP & BOTTOM (1) 3 1/2" IN FROM CORNERS & (1) IN THE CENTER. SIDES; (6) SCREWS @ 3 1/4", 13 3/4", 26 1/2", 39 3/8", 52" & 62 5/8".

PRODUCT RENEWED
ACCEPTANCE No. 01-0928.08
EXPIRATION DATE Nov 1, 2006
By Ishaq I. Chanda
PRODUCT CONTROL DIVISION
BUILDING CODE COMPLIANCE OFFICE

APPROVED AS COMPLYING WITH THE SOUTH FLORIDA BUILDING CODE
DATE APRIL 19, 2001
BY Manuel Sanchez
PRODUCT CONTROL DIVISION
BUILDING CODE COMPLIANCE OFFICE
ACCEPTANCE NO. 01-0226.02

STANLEY
STANLEY DOOR SYSTEMS
7300 REAMES ROAD
CHARLOTTE, NC 28216
PH. (704) 921-3470

PRODUCT: STANLEY OUTSWING GLAZED 11-4 x 8-0 WOODEDGE DOOR W/& W/O SIDELITES

PART OR ASSEMBLY: VERTICAL CROSS SECTIONS & BILL OF MATERIALS

REVISIONS

NO.	DATE		BY
3	3/10/01	CORRECT B.O.M.	RW
2	1/18/01	ADD ASA MATERIAL	RW
1	12/11/00	GENERAL REVISION	TJH

RW BUILDING CONSULTANTS, INC.
813.684.3831

DATE: 6/2/00
SCALE: 1/2"=1"
DWG. BY: TJH
CHK. BY: RW
DRAWING NO.: 39638
SHEET 2 OF 7

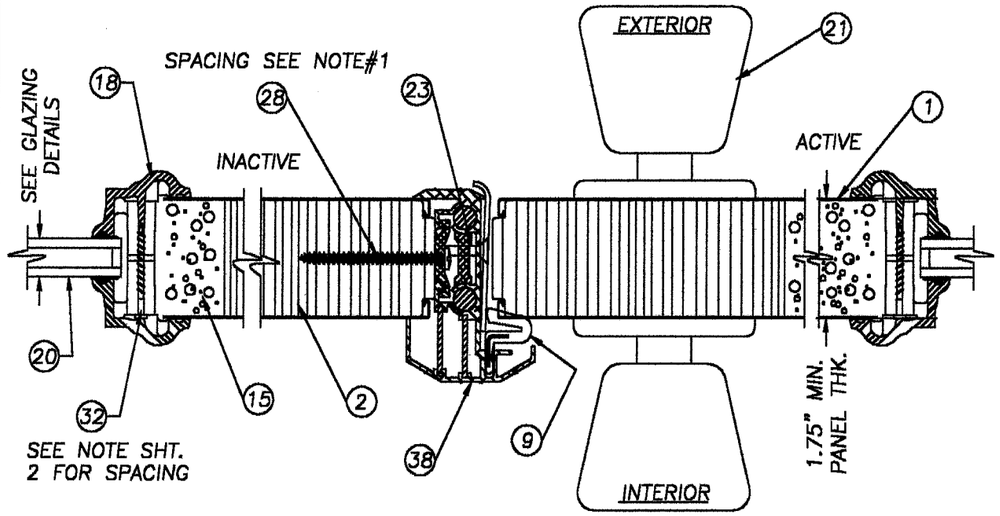

1/3 HORIZONTAL CROSS SECTION AT ASTRAGAL, TYP. (W/ITEM #38 WR80S)

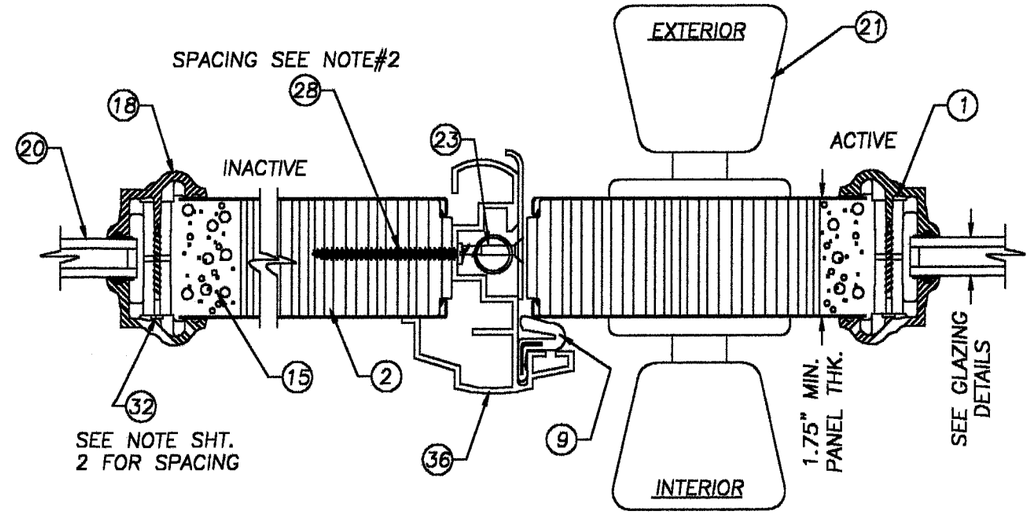

1/3 OPTIONAL HORIZONTAL CROSS SECTION AT ASTRAGAL, TYP. (W/ITEM #36 IMPERIAL)

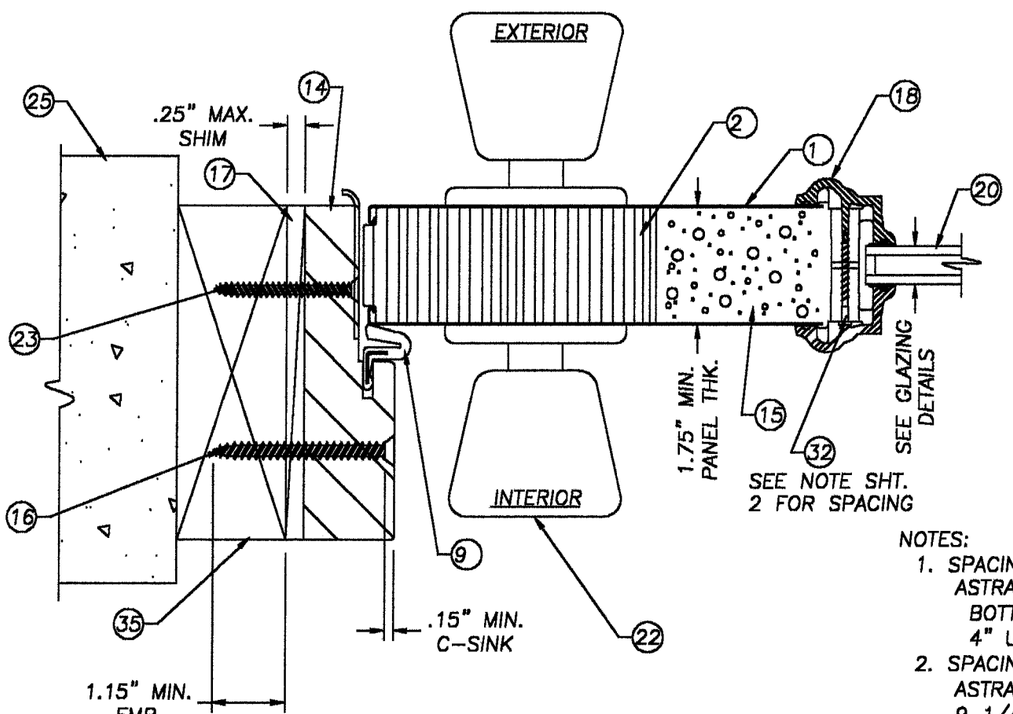

2/3 HORIZONTAL CROSS SECTION AT LATCH JAMB TO BUCK, TYP.

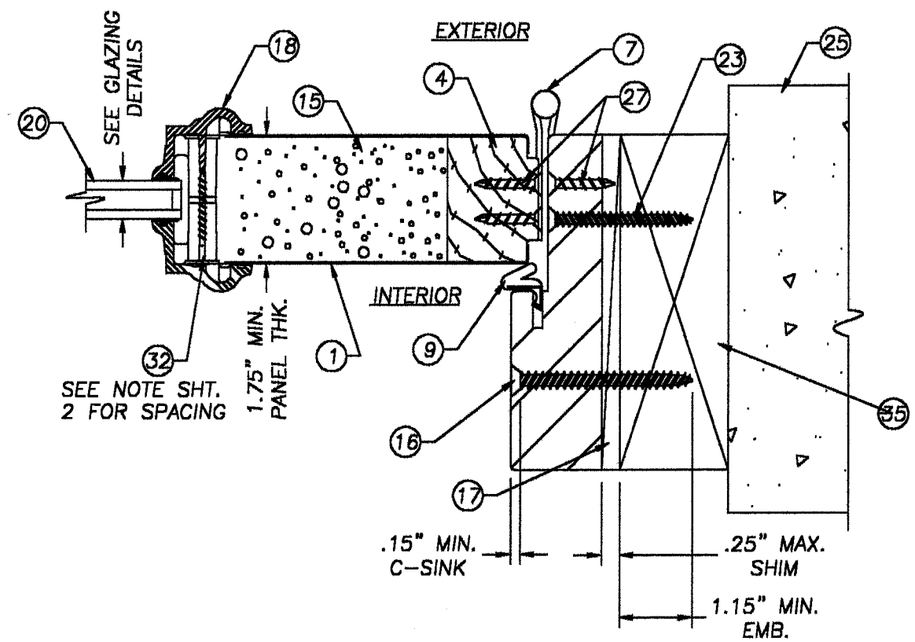

3/3 HORIZONTAL CROSS SECTION AT HINGE JAMB TO BUCK, TYP.

NOTES:

1. SPACING FOR ITEM #28 ON THE WR80S ASTRAGAL IS AS FOLLOWS: TOP DOWN & BOTTOM UP; 1", 3", 5", 26", & (1) 4" UP FROM THE STRIKE.
2. SPACING FOR ITEM #28 ON THE IMPERIAL ASTRAGAL IS AS FOLLOWS: TOP DOWN; 1", 9 1/4", 18 1/8", 26 7/8", 35 3/4", 44 3/8" & 48 1/8". FROM THE BOTTOM UP; 1", 7 1/2", 14 1/2", 21 1/2", 28 1/2", 33 1/2" & 37 1/4".

PRODUCT RENEWED

ACCEPTANCE No. 01-0928.08

EXPIRATION DATE Nov 1, 2006

By Ishaq I. Chanda

PRODUCT CONTROL DIVISION

BUILDING CODE COMPLIANCE OFFICE

APPROVED AS COMPLYING WITH THE SOUTH FLORIDA BUILDING CODE

DATE APRIL 19, 2001

BY

PRODUCT CONTROL DIVISION

BUILDING CODE COMPLIANCE OFFICE

ACCEPTANCE NO. 01-0226.01

STANLEY

STANLEY DOOR SYSTEMS
7300 REAMES ROAD
CHARLOTTE, NC 28216
PH. (704) 921-3470

PRODUCT: STANLEY OUTSWING GLAZED 11-4 x 8-0 WOODEDGE DOOR W/& W/O SIDELITES

PART OR ASSEMBLY: HORIZONTAL CROSS SECTIONS

REVISIONS

NO.	DATE		BY
3	3/10/01	CORRECT B.O.M.	RW
2	1/18/01	ADD ASA MATERIAL	RW
1	12/11/00	GENERAL REVISION	TJH

RW BUILDING CONSULTANTS, INC.
813.684.3831

DATE: 6/2/00
SCALE: 1/2"=1"
DWG. BY: TJH
CHK. BY: RW
DRAWING NO.: 39638
SHEET 3 OF 7

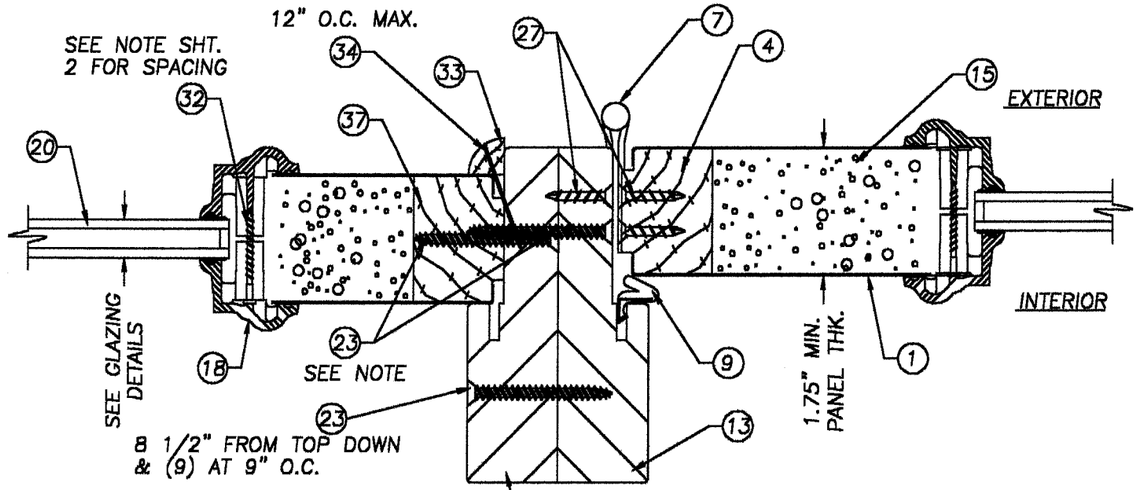

1/4 HORIZONTAL CROSS SECTION SIDELITE TO HINGE JAMB

NOTE:
SPACING FOR ITEM #23 GOING FROM THE JAMB INTO THE SIDELITE PANEL IS AS FOLLOWS: 6" DOWN FROM THE TOP AND 6" UP FROM THE BOTTOM WITH (2) MORE EVENLY SPACED. A TOTAL OF (4) SCREWS PER EACH JAMB.

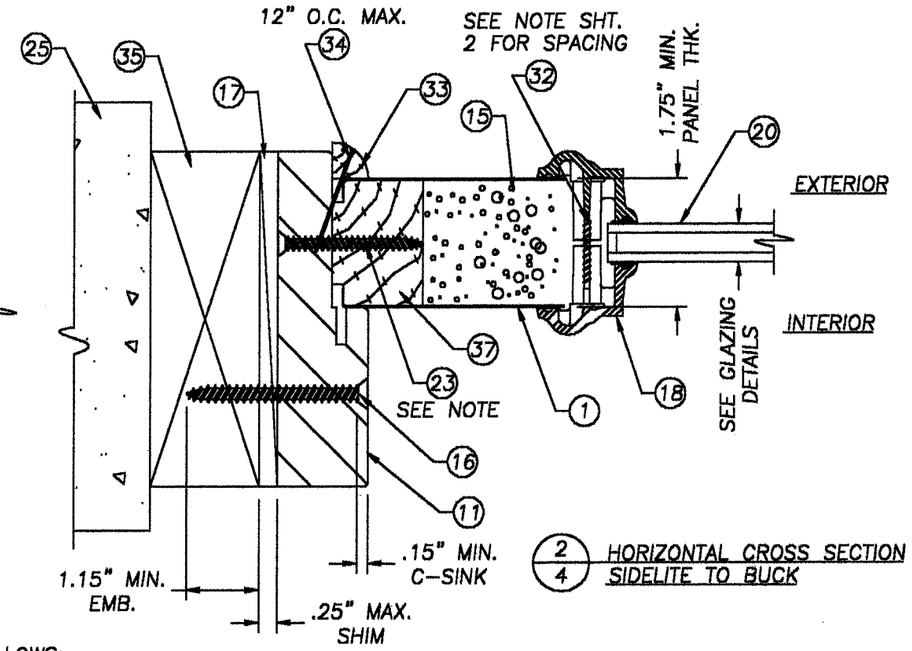

2/4 HORIZONTAL CROSS SECTION SIDELITE TO BUCK

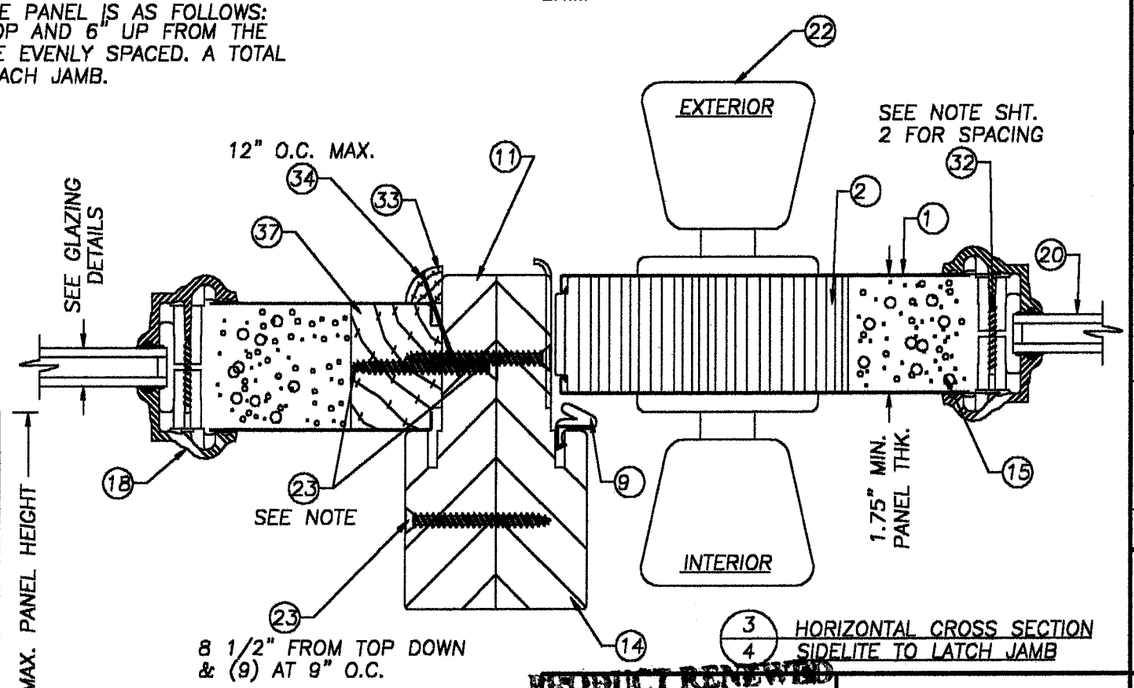

3/4 HORIZONTAL CROSS SECTION SIDELITE TO LATCH JAMB

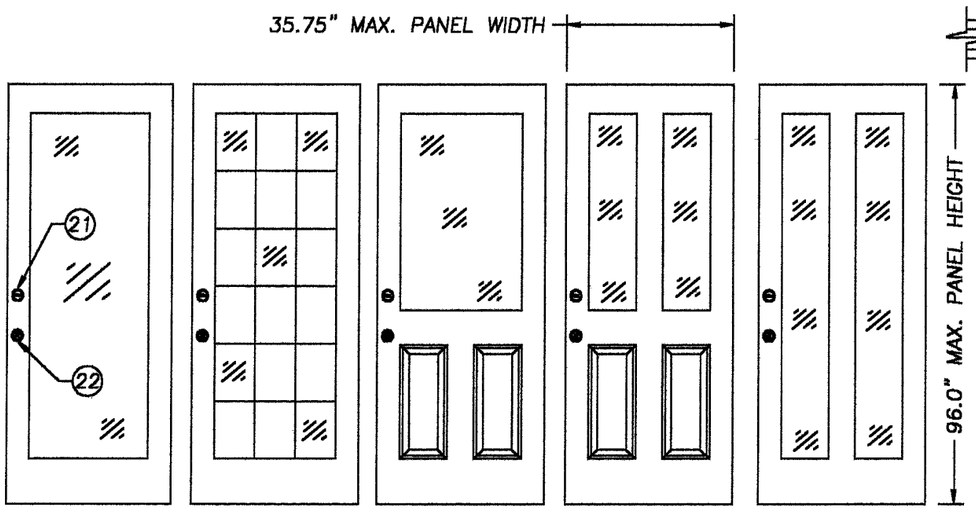

GLAZED DOOR MODELS

PRODUCT RENEWED
ACCEPTANCE NO. 01-0928.08
EXPIRATION DATE NOV 1, 2006
BY Ishay I. Chandra
PRODUCT CONTROL DIVISION
BUILDING CODE COMPLIANCE OFFICE

APPROVED AS COMPLYING WITH THE SOUTH FLORIDA BUILDING CODE
DATE APRIL 19, 2001
BY Manuel Perez
PRODUCT CONTROL DIVISION
BUILDING CODE COMPLIANCE OFFICE
ACCEPTANCE NO. 01-0226.01

STANLEY
STANLEY DOOR SYSTEMS
7300 REAMES ROAD
CHARLOTTE, NC 28216
PH. (704) 921-3470

PRODUCT: STANLEY OUTSWING GLAZED 11-4 x 8-0 WOODEDGE DOOR W/& W/O SIDELITES

PART OR ASSEMBLY: HORIZONTAL CROSS SECTIONS & DOOR MODELS

REVISIONS

NO.	DATE		BY
3	3/10/01	CORRECT B.O.M.	RW
2	1/18/01	ADD ASA MATERIAL	RW
1	12/11/00	GENERAL REVISION	TJH

RW BUILDING CONSULTANTS, INC.
813.684.3831

DATE: 6/2/00
SCALE: 1/2"=1"
DWG. BY: TJH
CHK. BY: RW
DRAWING NO.: 39638
SHEET 4 OF 7

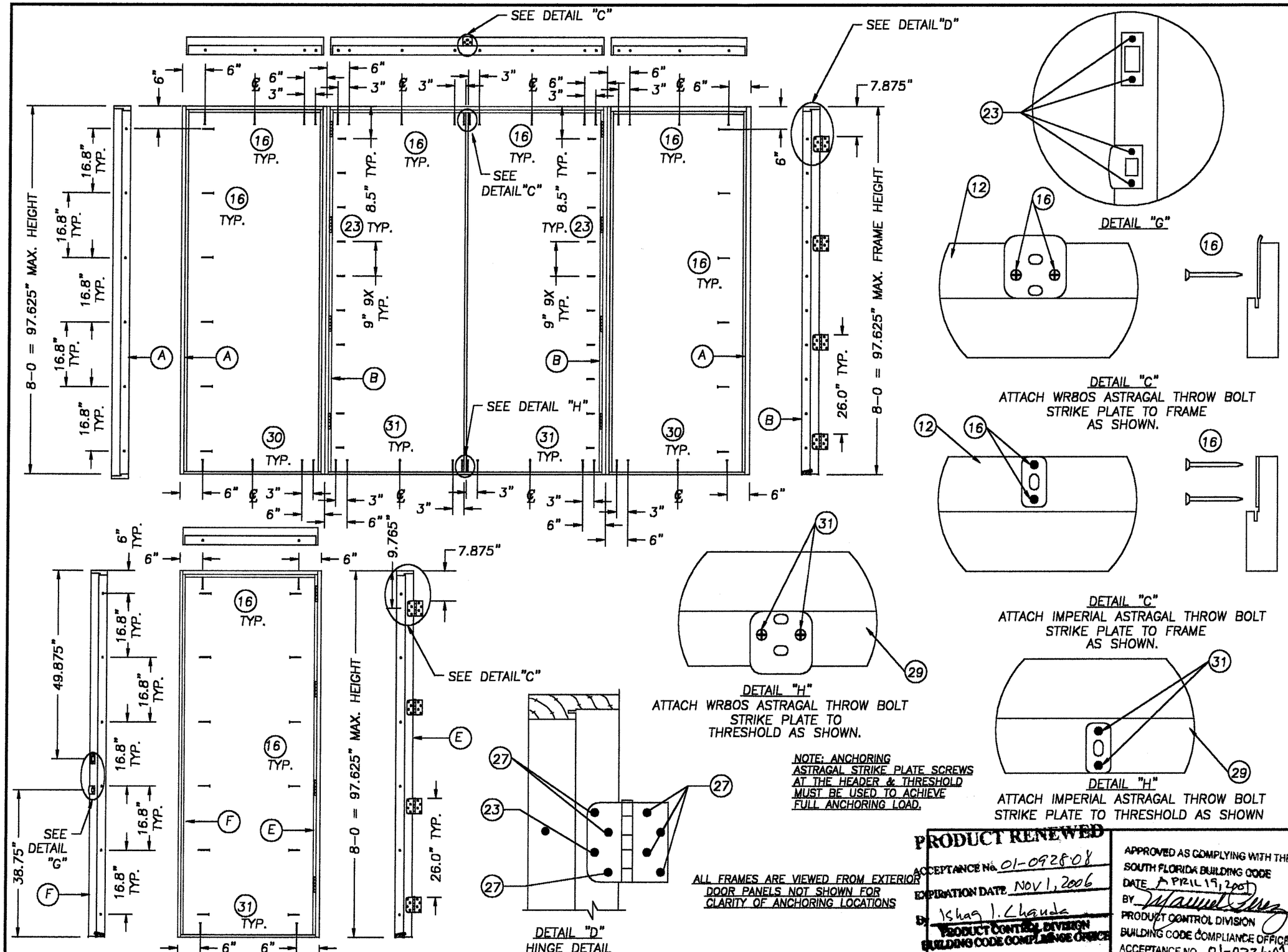

STANLEY

STANLEY DOOR SYSTEMS
7300 REAMES ROAD
CHARLOTTE, NC 28216
PH. (704) 921-3470

PRODUCT: STANLEY OUTSWING GLAZED 11-4 x 8-0 WOODEDGE DOOR W/& W/O SIDELITES

PART OR ASSEMBLY: ANCHORING LAYOUTS & DETAILS

REVISIONS

NO.	DATE		BY
3	3/10/01	CORRECT B.O.M.	RW
2	1/18/01	ADD ASA MATERIAL	RW
1	12/11/00	GENERAL REVISION	TJH

RW BUILDING CONSULTANTS, INC.
813.684.3831

PRODUCT RENEWED
ACCEPTANCE No. 01-0928.08
EXPIRATION DATE Nov 1, 2006
BY Ishaq I. Chanda
PRODUCT CONTROL DIVISION
BUILDING CODE COMPLIANCE OFFICE

APPROVED AS COMPLYING WITH THE SOUTH FLORIDA BUILDING CODE
DATE APRIL 19, 2001
BY Manuel Perez
PRODUCT CONTROL DIVISION
BUILDING CODE COMPLIANCE OFFICE
ACCEPTANCE NO. 01-0226.01

DATE: 6/2/00
SCALE: N.T.S.
DWG. BY: TJH
CHK. BY: RW
DRAWING NO.: 39638
SHEET 5 OF 7

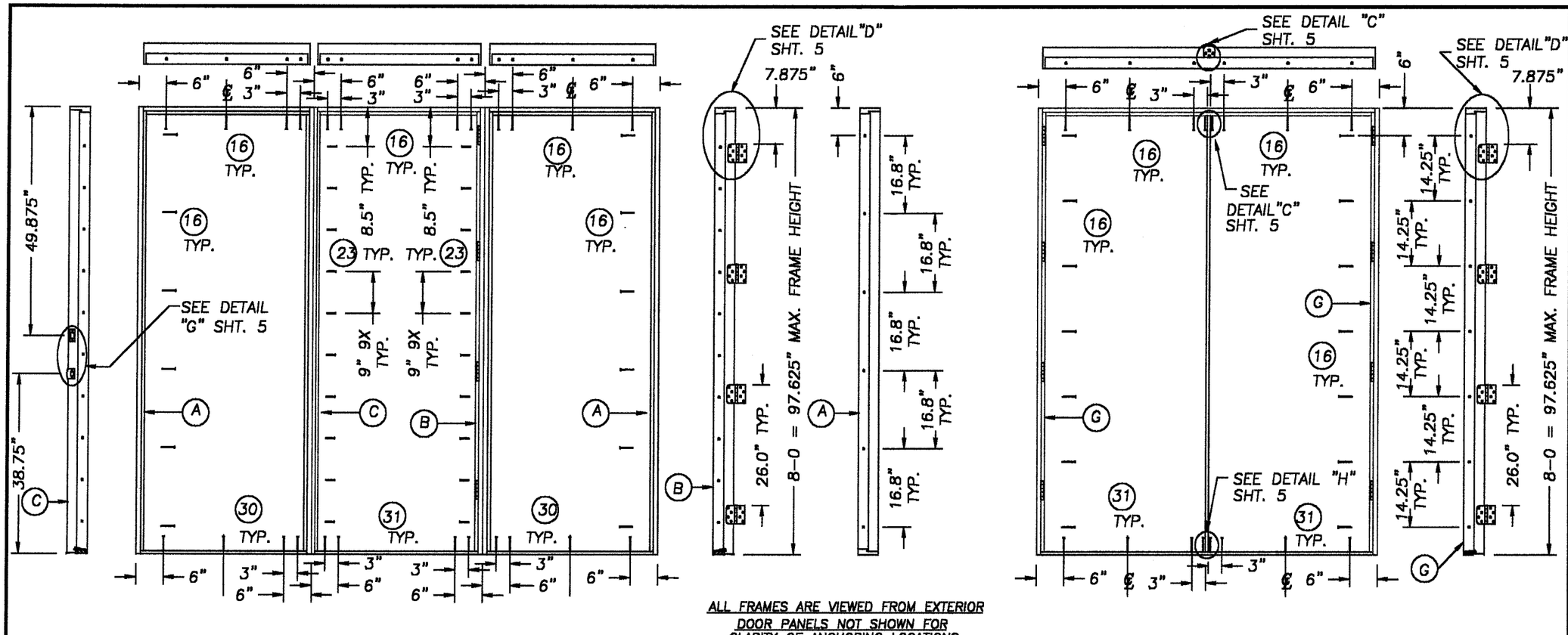

ALL FRAMES ARE VIEWED FROM EXTERIOR
DOOR PANELS NOT SHOWN FOR
CLARITY OF ANCHORING LOCATIONS

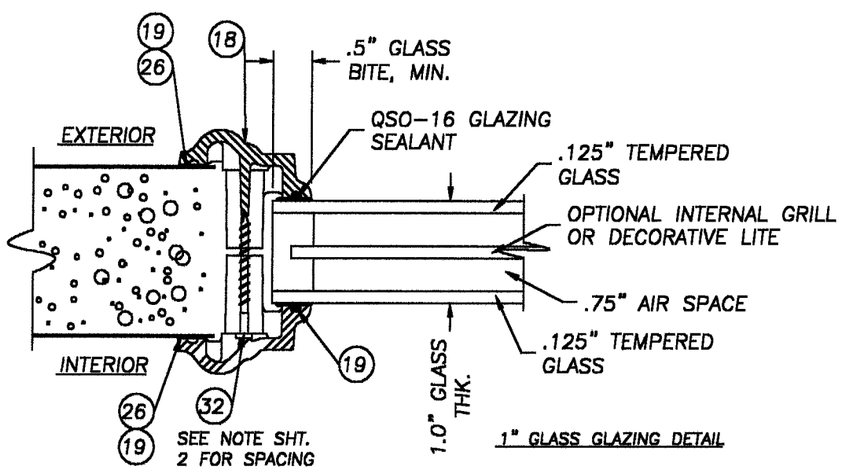

1" GLASS GLAZING DETAIL

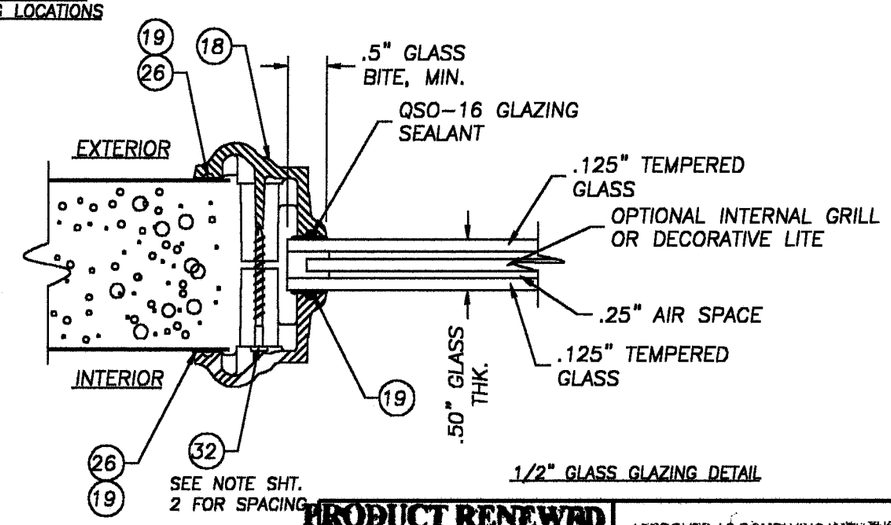

1/2" GLASS GLAZING DETAIL

NOTE: GLASS LITE FRAME SURROUNDS
3 ODL Spartech Polycom PP5530 C13
Trinity GE ASA Polycarbonate

PRODUCT RENEWED
ACCEPTANCE No. 01-0928.08
EXPIRATION DATE NOV 1, 2006
By Ishaq I. Chanda
PRODUCT CONTROL DIVISION
BUILDING CODE COMPLIANCE OFFICE

APPROVED AS COMPLYING WITH THE SOUTH FLORIDA BUILDING CODE
DATE APRIL 19, 2001
BY Shannon Perez
PRODUCT CONTROL DIVISION
BUILDING CODE COMPLIANCE OFFICE
ACCEPTANCE NO. 01-0226.02

STANLEY
STANLEY DOOR SYSTEMS
7300 REAMES ROAD
CHARLOTTE, NC 28216
PH. (704) 921-3470

PRODUCT: STANLEY OUTSWING GLAZED 11-4 x 8-0 WOODEDGE DOOR W/& W/O SIDELITES

PART OR ASSEMBLY: ANCHORING LAYOUTS & GLAZING DETAILS

REVISIONS

NO.	DATE		BY
3	3/10/01	CORRECT B.O.M.	RW
2	1/18/01	ADD ASA MATERIAL	RW
1	12/11/00	GENERAL REVISION	TJH

RW BUILDING CONSULTANTS, INC.
813.684.3831

DATE: 6/2/00
SCALE: N.T.S.
DWG. BY: TJH
CHK. BY: RW
DRAWING NO.: 39638
SHEET 6 OF 7

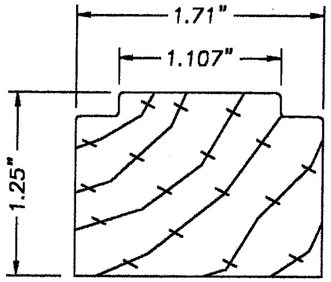

WOOD HINGE & BLANK SIDE STYLE

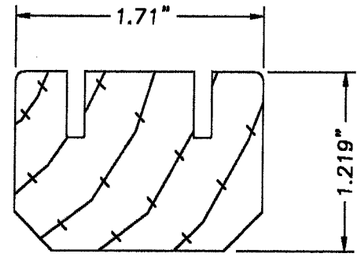

WOOD TOP STYLE

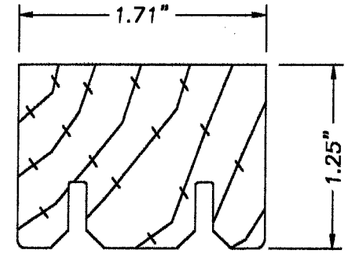

WOOD BOTTOM STYLE

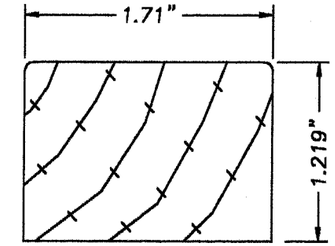

SIDELITE TOP & BOTTOM WOOD STYLE

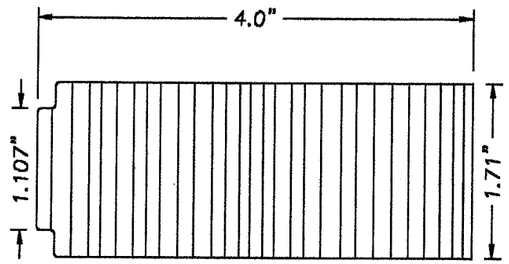

LVL LATCH STYLE

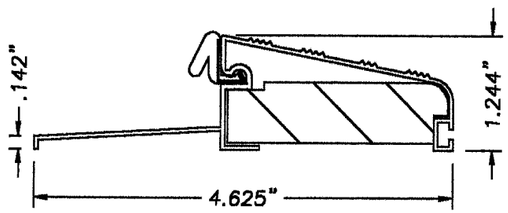

OUTSWING BUMP FACE
ALUMINUM THRESHOLD
.045" WALL THK.

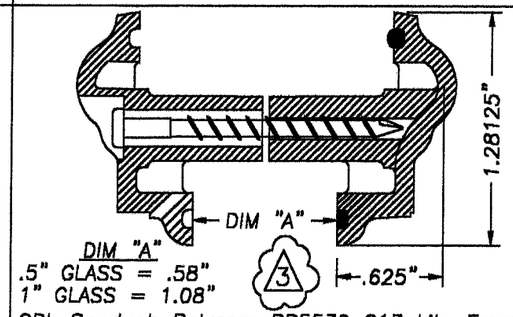

DIM "A"
.5" GLASS = .58"
1" GLASS = 1.08"

ODL Spartech Polycom PP5530 C13 Lite Frame
Trinity GE ASA Polycarbonate Lite Frame

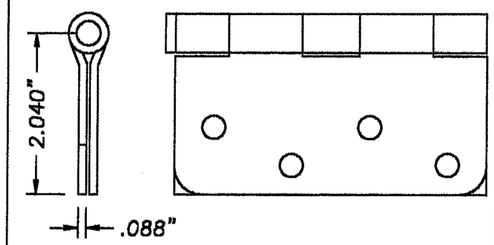

4 x 4 DOOR HINGE

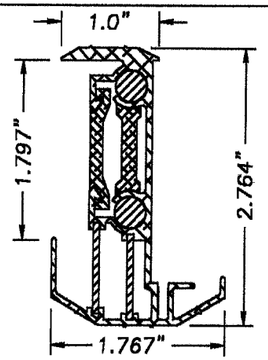

ASTRAGAL HAS
(2) 8 1/4"
BOLTS @ BOTTOM
& (2) 17 3/4"
BOLTS @ TOP

ASTRAGAL *WINDJAMBER II*
(WR80S) T-6063 EXTRUDED ALUMINUM

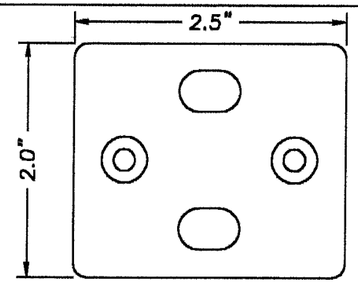

ASTRAGAL THRESHOLD STRIKE PLATE
WR80S .50" ALUM.

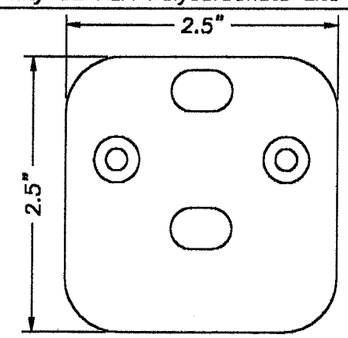

ASTRAGAL HEADER STRIKE PLATE
WR80S .066" STEEL

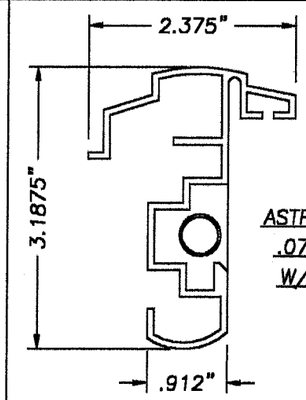

OPTIONAL
ASTRAGAL (IMPERIAL)
.075" WALL ALUM.
W/(2) 12" BOLTS

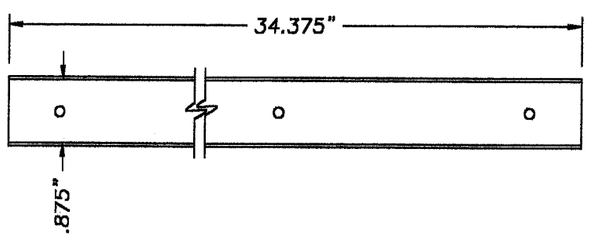

DOOR PANEL TOP & BOTTOM REIN.
.040" STEEL

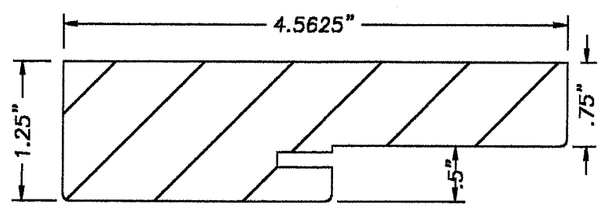

WOOD FRAME

PRODUCT RENEWED
ACCEPTANCE No. 01-0928-08
EXPIRATION DATE NOVEMBER 1, 2006
By Ishaq I. Chanda
PRODUCT CONTROL DIVISION
BUILDING CODE COMPLIANCE OFFICE

APPROVED AS COMPLYING WITH THE
SOUTH FLORIDA BUILDING CODE
DATE APRIL 19, 2001
BY Manuel Cruz
PRODUCT CONTROL DIVISION
BUILDING CODE COMPLIANCE OFFICE
ACCEPTANCE NO. 01-0226.02

STANLEY
STANLEY DOOR SYSTEMS
7300 REAMES ROAD
CHARLOTTE, NC 28216
PH. (704) 921-3470

PRODUCT: STANLEY OUTSWING GLAZED 11-4 x 8-0 WOODEDGE DOOR W/& W/O SIDELITES

PART OR ASSEMBLY: COMPONENTS

NO.	DATE	REVISIONS	BY
3	3/10/01	CORRECT B.O.M.	RW
2	1/18/01	ADD ASA MATERIAL	RW
1	12/11/00	GENERAL REVISION	TJH

RW BUILDING CONSULTANTS, INC.
813.684.3831

DATE: 6/2/00
SCALE: N.T.S.
DWG. BY: TJH
CHK. BY: RW
DRAWING NO.: 39638
SHEET 7 OF 7