MIAMI-DADE COUNTY, FLORIDA
METRO-DADE FLAGLER BUILDING

BUILDING CODE COMPLIANCE OFFICE
METRO-DADE FLAGLER BUILDING
140 WEST FLAGLER STREET, SUITE 1603
MIAMI, FLORIDA 33130-1563
(305) 375-2901 FAX (305) 375-2908

CONTRACTOR LICENSING SECTION
(305) 375-2527 FAX (305) 375-2558

CONTRACTOR ENFORCEMENT DIVISION
(305) 375-2966 FAX (305) 375-2908

PRODUCT CONTROL DIVISION
(305) 375-2902 FAX (305) 372-6339

PRODUCT CONTROL NOTICE OF ACCEPTANCE

Construction Glass Industries Corporation
7840 N.W. 62nd Street
Miami ,FL 33166

Your application for Notice of Acceptance (NOA) of:
Series 238 Aluminum Casement Window
under Chapter 8 of the Code of Miami-Dade County governing the use of Alternate Materials and Types of Construction, and completely described herein, has been recommended for acceptance by the Miami-Dade County Building Code Compliance Office (BCCO) under the conditions specified herein.

This NOA shall not be valid after the expiration date stated below. BCCO reserves the right to secure this product or material at any time from a jobsite or manufacturer's plant for quality control testing. If this product or material fails to perform in the approved manner, BCCO may revoke, modify, or suspend the use of such product or material immediately. BCCO reserves the right to revoke this approval, if it is determined by BCCO that this product or material fails to meet the requirements of the South Florida Building Code.

The expense of such testing will be incurred by the manufacturer.

ACCEPTANCE NO.: 01-1002.03
EXPIRES: 10/31/2006

Raul Rodriguez
Chief Product Control Division

THIS IS THE COVERSHEET, SEE ADDITIONAL PAGES FOR SPECIFIC AND GENERAL CONDITIONS
BUILDING CODE & PRODUCT REVIEW COMMITTEE

This application for Product Approval has been reviewed by the BCCO and approved by the Building Code and Product Review Committee to be used in Miami-Dade County, Florida under the conditions set forth above.

Francisco J. Quintana, R.A.
Director
Miami-Dade County
Building Code Compliance Office

APPROVED: 11/21/2001

NOTICE OF ACCEPTANCE: SPECIFIC CONDITIONS

1. SCOPE

1.1 This **revises** & **renews** Notice of Acceptance (NOA) No. **99-0329.01**, which was issued on November 18, 1999. It approves an aluminum casement window, as described in Section 2 of this NOA, designed to comply with the South Florida Building Code (SFBC), 1994 Edition for Miami-Dade County, for the locations where the pressure requirements, as determined by SFBC Chapter 23, do not exceed the Design Pressure Rating values indicated in the approved drawings.

2. PRODUCT DESCRIPTION

2.1 The **Series "238" Aluminum Casement Window – Non-Impact & Impact Resistant** and its components shall be constructed in strict compliance with the following document: Drawing No **W98-100**, Sheets 1 through 6 of 6, titled "Series - 238 Aluminum Casement Window," prepared by Al Farooq Corporation, dated 12/04/98 and revised on 9/27/01, bearing the Miami-Dade County Product Control approval stamp with the NOA number and approval date by the Miami-Dade County Product Control Division. This document shall hereinafter be referred to as the approved drawings.

3. LIMITATIONS

3.1 This approval applies to single unit applications only, as shown in approved drawings.

3.2 For Design Pressure Rating vs. Window Size, see Comparative Analysis Tables in approved drawings.

4. INSTALLATION

4.1 The aluminum casement window and its components shall be installed in strict compliance with the approved drawings.

4.2 Hurricane protection system (shutters): to determine whether the installation requires a hurricane protection system or not, see corresponding table in approved drawing.

5. LABELING

5.1 Each unit shall bear a permanent label with the manufacturer's name or logo, city, state and following statement: "Miami-Dade County Product Control Approved".

6. BUILDING PERMIT REQUIREMENTS

6.1 Application for building permit shall be accompanied by copies of the following:

6.1.1 This Notice of Acceptance

6.1.2 Duplicate copies of the approved drawings, as identified in Section 2 of this Notice of Acceptance, clearly marked to show the components selected for the proposed installation.

6.1.3 Any other documents required by the Building Official or the South Florida Building Code (SFBC) in order to properly evaluate the installation of this system.

Raul Rodriguez, Chief
Product Control Division

Construction Glass Ind. Corp. **ACCEPTANCE No.: 01-1002.03**

APPROVED: November 22, 2001

EXPIRES: October 31, 2006

NOTICE OF ACCEPTANCE: STANDARD CONDITIONS

1. Renewal of this Acceptance (approval) shall be considered after a renewal application has been filed and the original submitted documentation, including test supporting data, engineering documents, are no older than eight (8) years.
2. Any and all approved products shall be permanently labeled with the manufacturer's name, city, state, and the following statement: "Miami-Dade County Product Control Approved", or as specifically stated in the specific conditions of this Acceptance.
3. Renewals of Acceptance will not be considered if:
   a) There has been a change in the South Florida Building Code affecting the evaluation of this product and the product is not in compliance with the code changes;
   b) The product is no longer the same product (identical) as the one originally approved;
   c) If the Acceptance holder has not complied with all the requirements of this acceptance, including the correct installation of the product;
   d) The engineer who originally prepared, signed and sealed the required documentation initially submitted is no longer practicing the engineering profession.
4. Any revision or change in the materials, use, and/or manufacture of the product or process shall automatically be cause for termination of this Acceptance, unless prior written approval has been requested (through the filing of a revision application with appropriate fee) and granted by this office.
5. Any of the following shall also be grounds for removal of this Acceptance:
   a) Unsatisfactory performance of this product or process.
   b) Misuse of this Acceptance as an endorsement of any product, for sales, advertising or any other purpose.
6. The Notice of Acceptance number preceded by the words Miami-Dade County, Florida, and followed by the expiration date may be displayed in advertising literature. If any portion of the Notice of Acceptance is displayed, then it shall be done in its entirety.
7. A copy of this Acceptance as well as approved drawings and other documents, where it applies, shall be provided to the user by the manufacturer or its distributors and shall be available for inspection at the job site at all time. The engineer need not reseal the copies.
8. Failure to comply with any section of this Acceptance shall be cause for termination and removal of Acceptance.
9. This Notice of Acceptance consists of pages 1, 2 and this last page 3.

END OF THIS ACCEPTANCE

Raul Rodriguez, Chief
Product Control Division

GENERAL WINDOW SECTIONS

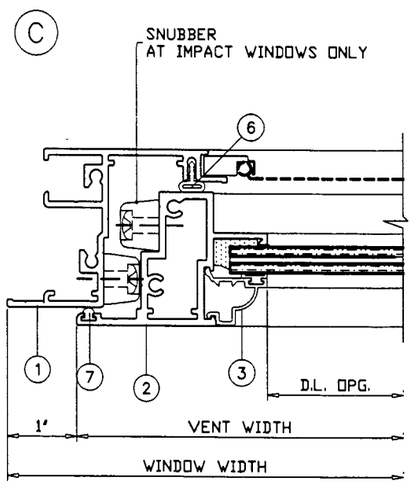

EXTERIOR

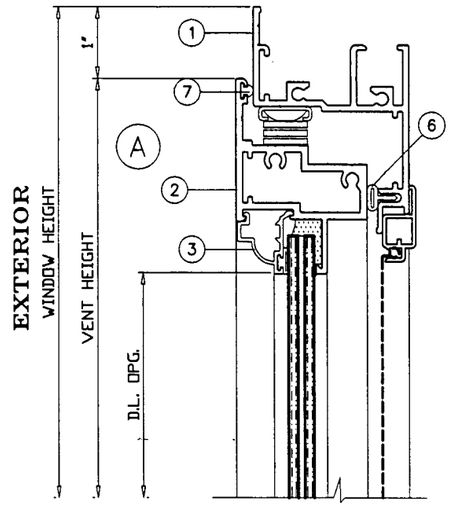

FOR GLASS TYPES,
REFER TO
SHEETS 3, 3A AND 4.

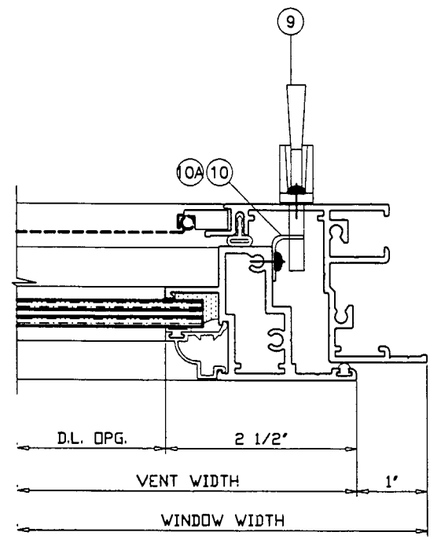

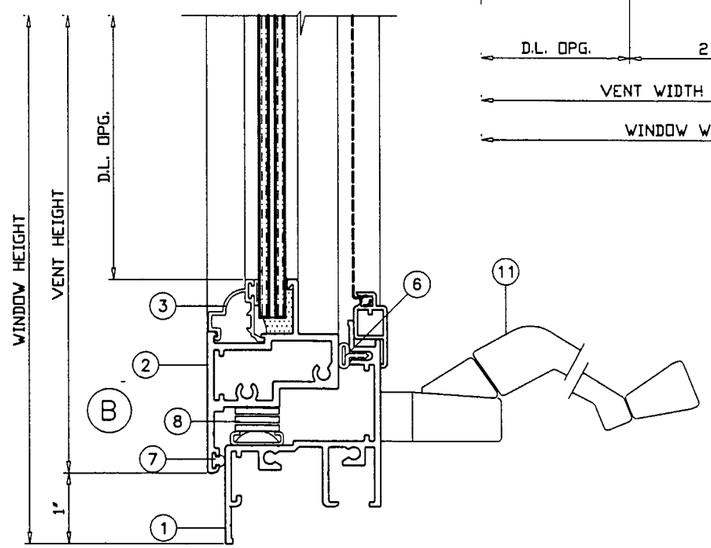

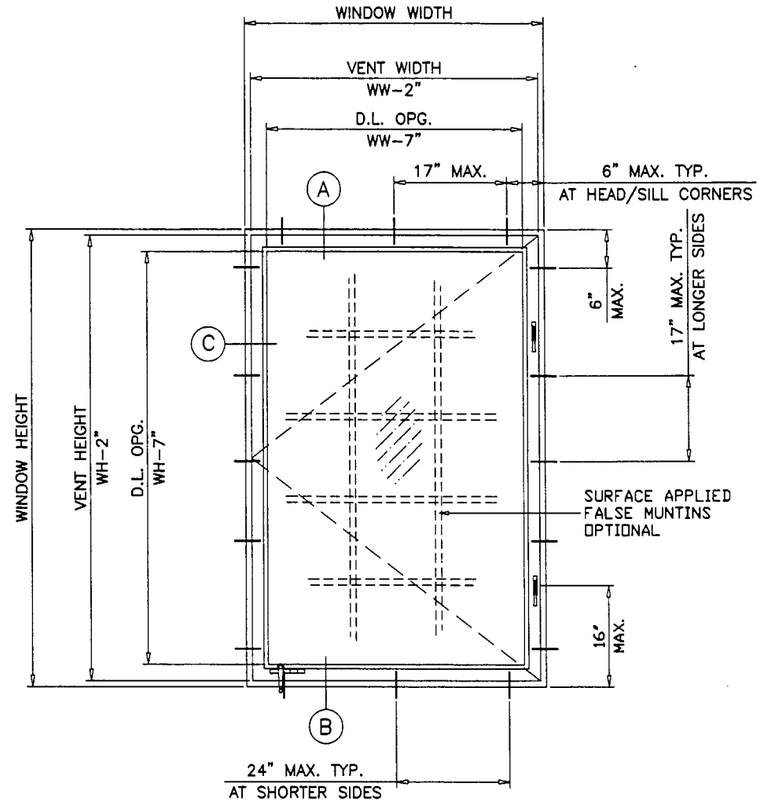

TYPICAL ELEVATION

FOR MULLION/MULTIPLE UNITS, REFER TO
SEPARATE CGI MULLION N.O.A.

NOTES:

1. THIS STRUCTURE IS DESIGNED AS PER THE SOUTH FLORIDA BUILDING CODE 1994 EDITION FOR DADE COUNTY. ALSO FOR WIND LOADS AS PER ASCE 7-88 USING CORRESPONDING LOADS.
2. WOOD BUCKS BY OTHERS, MUST BE ANCHORED PROPERLY TO TRANSFER LOADS TO THE STRUCTURE.
3. ANCHORS SHALL BE AS LISTED, SPACED AS SHOWN ON DETAILS. ANCHOR EMBEDMENT TO BASE MATERIAL SHALL BE BEYOND WALL DRESSING OR STUCCO.

INSTRUCTIONS FOR USING THESE CHARTS:

STEP 1 DETERMINE THE REQUIRED DESIGN PRESSURES FOR A GIVEN WINDOW.

STEP 2 OBTAIN CAPACITY OF WINDOW/GLASS TYPE FROM APPROPRIATE CHARTS.
A) SHEET 3 & 3A FOR IMPACT RESISTANT.
B) SHEET 4 FOR NON-IMPACT RESISTANT.

STEP 3 SELECT INSTALLATION (ANCHOR) TYPE FROM DETAILS ON SHEET 5 AND CHART ON SHEET 6.

THE VALUES OBTAINED FOR WINDOW AND ANCHORS MUST MEET OR EXCEED THE REQUIRED PRESSURES.

Engr: DR. HUMAYOUN FAROOQ
STRUCTURES
FLA. PE # 16557

SEP 28 2001

APPROVED AS COMPLYING WITH THE SOUTH FLORIDA BUILDING CODE
DATE November 22, 2001 19
BY
PRODUCT CONTROL DIVISION
BUILDING CODE COMPLIANCE OFFICE
ACCEPTANCE NO. 01-1002.03

AL-FAROOQ CORPORATION
ENGINEERS, PLANNERS & PRODUCT DESIGN
1235 SW 87 AVE
MIAMI, FLORIDA 33174
TEL. (305) 264-8100 FAX. (305) 262-6978
COMP-ANL\W98-100CGI

SERIES-238 ALUMINUM CASEMENT WINDOW

CONSTRUCTION GLASS IND. CORP.
7840 N.W. 62 nd STREET
MIAMI, FL. 33166
TEL. (305) 593-6590 FAX. (305) 593-6592

revisions:

no	date	by	description
A	09.27.01		CHARTS REV. PER ASTM E-1300

date: 12-04-98
scale: 1/2" = 1"
dr. by: HAMID
chk. by:

drawing no.
W98-100

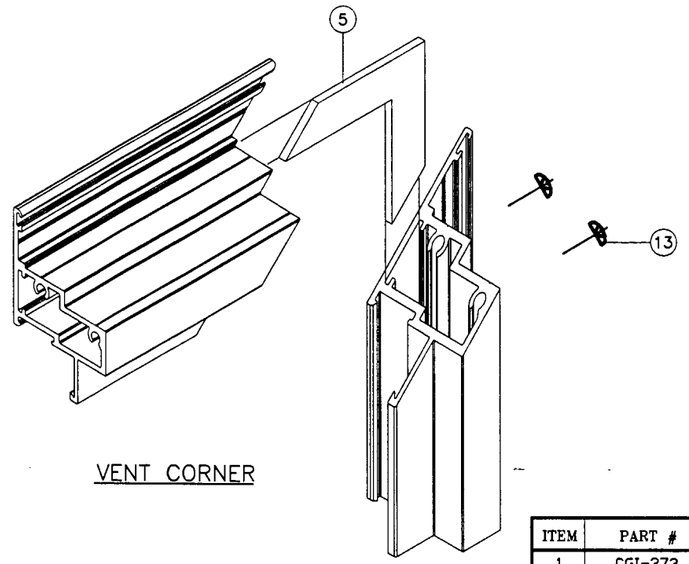

VENT CORNER

ALL FRAME AND VENT CORNERS TO BE SEALED WITH GE SILPRUF OR EQUIV.

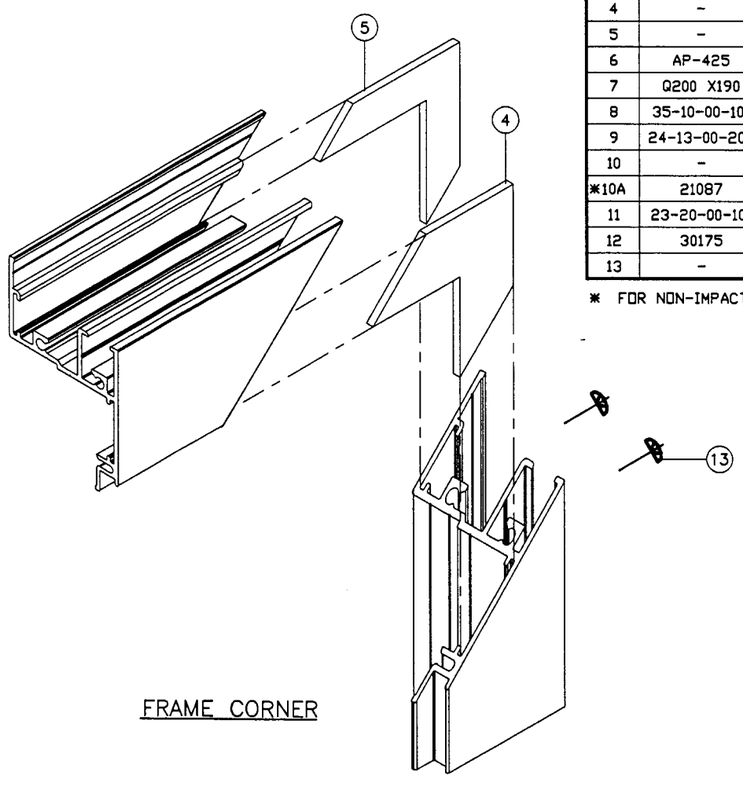

FRAME CORNER

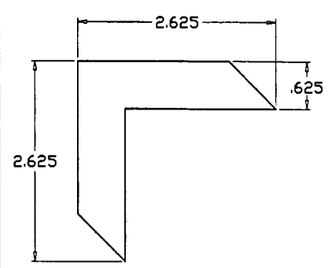

CORNER KEY
.060 THICK ST. STEEL

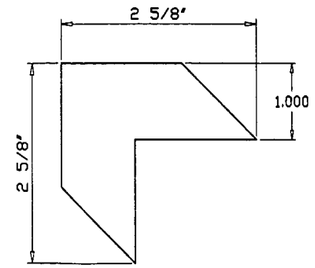

CORNER KEY
.062 THICK ALUMINUM

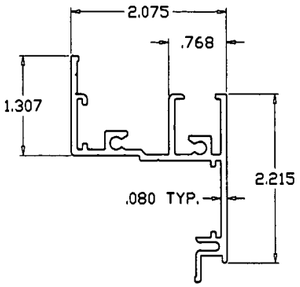

FRAME

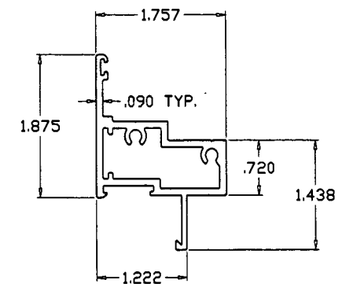

VENT (5/16" LAM. GLASS)

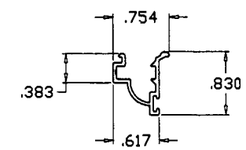

GLAZING STOP

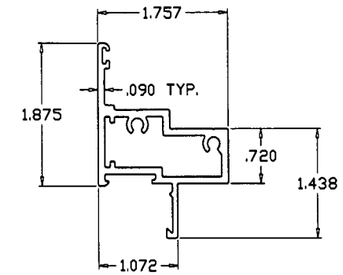

VENT (3/16" & 1/4" GLASS)

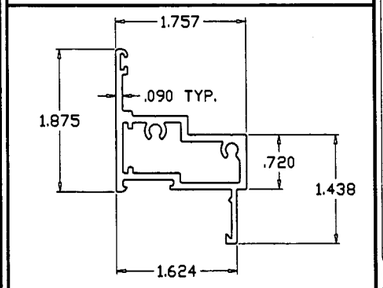

VENT (3/4" INSUL. GLASS)

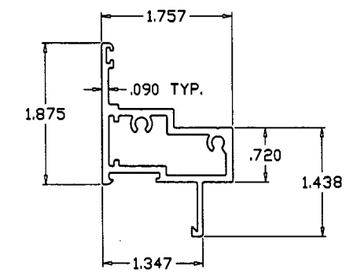

VENT (7/16" LAM. GLASS)

ITEM	PART #	QUANTITY	DESCRIPTION	MATERIAL	MANF./SUPPLIER/REMARKS
1	CGI-373	4	FRAME	6063-T6	INDALEX OR EQUIV.
2	CGI-378	4	VENT (5/16" LAM. GLASS)	6063-T6	INDALEX OR EQUIV.
2A	CGI-374	4	VENT (3/16" & 1/4" GLASS)	6063-T6	INDALEX OR EQUIV.
2B	-	4	VENT (3/4" INSUL. GLASS)	6063-T6	INDALEX OR EQUIV.
2C	CGI-385	4	VENT (7/16" LAM. GLASS)	6063-T6	INDALEX OR EQUIV.
3	CGI-375	4	GLAZING BEAD	6063-T5	INDALEX OR EQUIV.
4	-	4	.060 THICK CORNER KEY	ALUMINUM	-
5	-	8	.060 THICK CORNER KEY	ST. STEEL	-
6	AP-425	AS REQD.	FRAME WEATHERSTRIPPING	-	SCHLEGEL APTUS
7	Q200 X190	AS REQD.	VENT WEATHERSTRIPPING	-	SCHLEGEL Q-LON
8	35-10-00-101	2/ VENT	4 BAR HINGE, AT TOP AND BOTTOM	STEEL	TRUTH, ATTACHED W/ (6) #8 X 3/8" SS SMS
9	24-13-00-202	2/ VENT	FACE MOUNT LOCK	STEEL	TRUTH, ATTACHED W/ (2) #8 X 3/8" SMS
10	-	2/ VENT	.110 THICK LOCK KEEPER, AT FRAME JAMB FACING LOCK	STEEL	CGI, ATTACHED W/ (2) #10 X 3/8" SS SMS
*10A	21087	2/ VENT	LOCK KEEPER, AT FRAME JAMB FACING LOCK	STEEL	TRUTH, ATTACHED W/ (2) #10 X 3/8" SS SMS
11	23-20-00-101	1	OPERATOR HANDLE	STEEL	TRUTH, ATTACHED W/ (2) #8 X 3/8" SS SMS
12	30175	1	OPERATOR TRACK	STEEL	TRUTH, ATTACHED W/ (2) #8 X 3/8" SS SMS
13	-	2/ CORNER	FRAME AND VENT ASSEMBLY SCREWS	-	#10 X 1-1/4" SS SMS

* FOR NON-IMPACT WONDOWS WITH 3/16" ANN. GLASS ONLY

Engr: DR. HUMAYOUN FAROOQ
STRUCTURES
FLA. PE # 16557

SEP 28 2001

APPROVED AS COMPLYING WITH THE SOUTH FLORIDA BUILDING CODE
DATE November 22, 2001
BY
PRODUCT CONTROL DIVISION
BUILDING CODE COMPLIANCE OFFICE
ACCEPTANCE NO. 01-1002.03

AL-FAROOQ CORPORATION
ENGINEERS, PLANNERS & PRODUCT DESIGN
1235 SW 87 AVE
MIAMI, FLORIDA 33174
TEL. (305) 264-8100 FAX. (305) 262-6978
COMP-ANL\W98-100CGI

SERIES-238 ALUMINUM CASEMENT WINDOW

CONSTRUCTION GLASS IND. CORP.
7840 N.W. 62 nd STREET
MIAMI, FL. 33166
TEL. (305) 593-6590 FAX. (305) 593-6592

revisions:

no	date	by	description
A	09.27.01		REVISED

date: 12-04-98
scale: 1/2" = 1"
dr. by: HAMID
chk. by:

drawing no.
W98-100

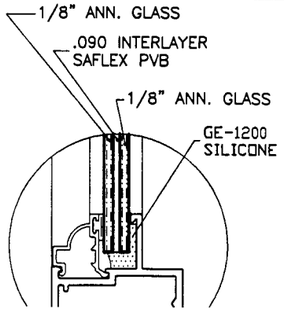

5/16" NOMINAL
GLASS TYPE '2'

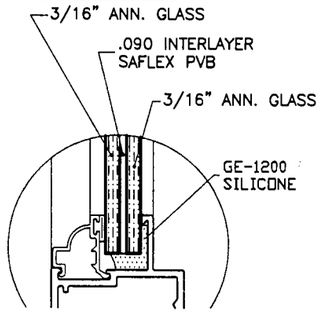

7/16" NOMINAL
GLASS TYPE '3'

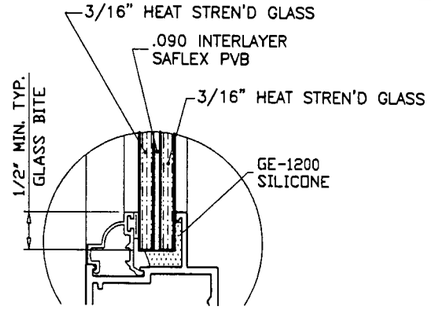

7/16" NOMINAL
GLASS TYPE '6'

PERFORMANCE VALUES OF IMPACT RESISTANT WINDOWS
NO SHUTTERS REQUIRED
REFER TO SHEETS 5 AND 6 FOR INSTALLATION DETAILS

WINDOW DIMS.		GLASS TYPE '2'		GLASS TYPE '3'		GLASS TYPE '6'	
WIDTH	HEIGHT	EXT. (+)	INT. (−)	EXT. (+)	INT. (−)	EXT. (+)	INT. (−)
20"	36"	110.0	167.0	110.0	167.0	110.0	210.0
24"		110.0	145.5	110.0	167.0	110.0	210.0
28"		110.0	113.9	110.0	167.0	110.0	210.0
30"		104.3	104.3	110.0	167.0	110.0	210.0
32"		95.8	95.8	110.0	167.0	110.0	210.0
36"		82.5	82.5	110.0	167.0	110.0	210.0
40"		72.2	72.2	110.0	120.0	110.0	120.0
42"		67.7	67.7	110.0	120.0	110.0	120.0
20"	42"	110.0	154.4	110.0	167.0	110.0	210.0
24"		110.0	127.2	110.0	167.0	110.0	210.0
28"		95.8	95.8	110.0	167.0	110.0	210.0
30"		86.7	86.7	110.0	167.0	110.0	210.0
32"		79.3	79.3	110.0	120.0	110.0	120.0
36"		67.7	67.7	110.0	120.0	110.0	120.0
40"		60.2	60.2	110.0	120.0	110.0	120.0
42"		57.2	57.2	110.0	120.0	110.0	120.0
20"	48"	110.0	130.0	110.0	167.0	110.0	210.0
24"		110.0	111.2	110.0	167.0	110.0	210.0
28"		82.9	82.9	110.0	120.0	110.0	120.0
30"		74.5	74.5	110.0	120.0	110.0	120.0
32"		67.8	67.8	110.0	120.0	110.0	120.0
36"		58.5	58.5	110.0	120.0	110.0	120.0
40"		52.9	52.9	110.0	113.4	110.0	120.0
42"		50.5	50.5	106.4	106.4	110.0	120.0
20"	54"	110.0	112.3	110.0	167.0	110.0	210.0
24"		98.0	98.0	110.0	167.0	110.0	191.1
28"		73.9	73.9	110.0	120.0	110.0	120.0
30"		66.0	66.0	110.0	120.0	110.0	120.0
32"		59.5	59.5	110.0	120.0	110.0	120.0
36"		52.0	52.0	110.0	115.1	110.0	120.0
40"		47.3	47.3	98.6	98.6	110.0	120.0
42"		45.2	45.2	92.6	92.6	110.0	120.0

PERFORMANCE VALUES OF IMPACT RESISTANT WINDOWS
NO SHUTTERS REQUIRED
REFER TO SHEETS 5 AND 6 FOR INSTALLATION DETAILS

WINDOW DIMS.		GLASS TYPE '2'		GLASS TYPE '3'		GLASS TYPE '6'	
WIDTH	HEIGHT	EXT. (+)	INT. (−)	EXT. (+)	INT. (−)	EXT. (+)	INT. (−)
20"	60"	98.8	98.8	110.0	167.0	110.0	192.6
24"		85.8	85.8	110.0	120.0	110.0	120.0
28"		66.9	66.9	110.0	120.0	110.0	120.0
30"		59.8	59.8	110.0	120.0	110.0	120.0
32"		54.0	54.0	110.0	120.0	110.0	120.0
36"		46.6	46.6	102.7	102.7	110.0	120.0
20"	66"	86.7	86.7	110.0	167.0	110.0	169.0
24"		73.4	73.4	110.0	120.0	110.0	120.0
28"		64.2	64.2	110.0	120.0	110.0	120.0
30"		57.8	57.8	110.0	118.2	110.0	118.2
32"		49.6	49.6	110.0	112.2	110.0	112.2
20"	72"	66.4	66.4	110.0	120.0	110.0	120.0
24"		56.1	56.1	109.3	109.3	109.3	109.3
28"		48.9	48.9	95.3	95.3	95.3	95.3
30"		46.0	46.0	89.8	89.8	89.8	89.8
32"		43.6	43.6	85.0	85.0	85.0	85.0
20"	78"	52.0	52.0	101.3	101.3	101.3	101.3
24"		43.8	43.8	85.4	85.4	85.4	85.4
28"		38.1	38.1	74.3	74.3	74.3	74.3
20"	84"	41.5	41.5	80.8	80.8	80.8	80.8
24"		34.9	34.9	68.0	68.0	68.0	68.0
19-1/8"	26"	110.0	167.0	110.0	167.0	110.0	210.0
26-1/2"		110.0	167.0	110.0	167.0	110.0	210.0
37"		110.0	123.0	110.0	167.0	110.0	210.0
19-1/8"	38-3/8"	110.0	167.0	110.0	167.0	110.0	210.0
26-1/2"		110.0	114.2	110.0	167.0	110.0	210.0
37"		73.4	73.4	110.0	120.0	110.0	120.0
19-1/8"	50-5/8"	110.0	125.8	100.0	167.0	110.0	210.0
26-1/2"		88.1	88.1	110.0	120.0	110.0	120.0
37"		54.2	54.2	110.0	117.7	110.0	120.0
19-1/8"	63"	96.7	96.7	110.0	167.0	110.0	188.5
26-1/2"		74.8	74.8	110.0	120.0	110.0	120.0
37"		42.8	42.8	93.1	93.1	110.0	117.0
19-1/8"	74-1/4"	63.0	63.0	110.0	120.0	110.0	120.0
26-1/2"		46.6	46.6	90.9	90.9	90.9	90.9

Engr: DR. HUMAYOUN FAROOQ
STRUCTURES
FLA. PE # 16557

SEP 28 2001

APPROVED AS COMPLYING WITH THE SOUTH FLORIDA BUILDING CODE
DATE November 22, 2001
BY
PRODUCT CONTROL DIVISION
BUILDING CODE COMPLIANCE OFFICE
ACCEPTANCE NO. 01-1002.03

AL-FAROOQ CORPORATION
ENGINEERS, PLANNERS & PRODUCT DESIGN
1235 SW 87 AVE
MIAMI, FLORIDA 33174
TEL. (305) 264-8100 FAX. (305) 262-6978

COMP-ANL\W98-100CGI

SERIES-238 ALUMINUM CASEMENT WINDOW

CONSTRUCTION GLASS IND. CORP.
7840 N.W. 62 nd STREET
MIAMI, FL. 33166
TEL. (305) 593-6590 FAX. (305) 593-6592

revisions:

no	date	by	description
A	09.27.01		CHARTS REV. PER ASTM E-1300

date: 12-04-98
scale: 1/2" = 1"
dr. by: HAMID
chk. by:

drawing no.
W98-100

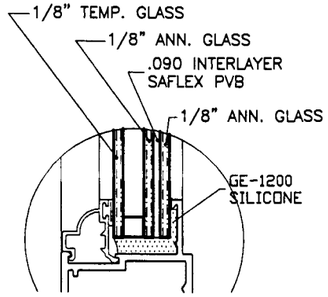

3/4" INSULATED
GLASS TYPE '2A'

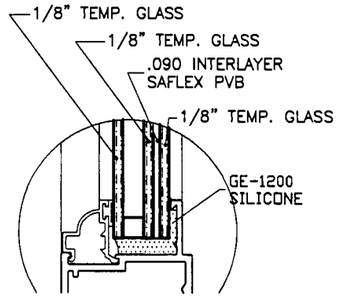

3/4" INSULATED
GLASS TYPE '3A'

PERFORMANCE VALUES OF IMPACT RESISTANT WINDOWS
NO SHUTTERS REQUIRED
REFER TO SHEETS 5 AND 6 FOR INSTALLATION DETAILS

WINDOW DIMS.		GLASS TYPE '2A'		GLASS TYPE '3A'	
WIDTH	HEIGHT	EXT. (+)	INT. (−)	EXT. (+)	INT. (−)
20"	36"	110.0	190.0	110.0	210.0
24"		110.0	161.9	110.0	210.0
28"		110.0	129.8	110.0	210.0
30"		110.0	118.9	110.0	210.0
32"		109.2	109.2	110.0	210.0
36"		94.0	94.0	110.0	210.0
40"		82.3	82.3	110.0	120.0
42"		77.2	77.2	110.0	120.0
20"	42"	110.0	154.4	110.0	210.0
24"		110.0	137.2	110.0	210.0
28"		109.3	109.3	110.0	210.0
30"		98.8	98.8	110.0	210.0
32"		90.5	90.5	110.0	120.0
36"		77.2	77.2	110.0	120.0
40"		68.7	68.7	110.0	120.0
42"		65.2	65.2	110.0	120.0
20"	48"	110.0	130.0	110.0	210.0
24"		110.0	114.3	110.0	210.0
28"		94.5	94.5	110.0	120.0
30"		85.0	85.0	110.0	120.0
32"		77.3	77.3	110.0	120.0
36"		66.7	66.7	110.0	120.0
40"		60.4	60.4	110.0	120.0
42"		57.5	57.5	110.0	120.0
20"	54"	110.0	112.3	110.0	210.0
24"		98.0	98.0	110.0	191.1
28"		84.2	84.2	110.0	120.0
30"		75.2	75.2	110.0	120.0
32"		67.9	67.9	110.0	120.0
36"		59.3	59.3	110.0	120.0
40"		54.0	54.0	110.0	120.0
42"		51.6	51.6	110.0	120.0

PERFORMANCE VALUES OF IMPACT RESISTANT WINDOWS
NO SHUTTERS REQUIRED
REFER TO SHEETS 5 AND 6 FOR INSTALLATION DETAILS

WINDOW DIMS.		GLASS TYPE '2A'		GLASS TYPE '3A'	
WIDTH	HEIGHT	EXT. (+)	INT. (−)	EXT. (+)	INT. (−)
20"	60"	98.8	98.8	110.0	192.6
24"		85.8	85.8	110.0	120.0
28"		76.3	76.3	110.0	120.0
30"		68.1	68.1	110.0	120.0
32"		61.6	61.6	110.0	120.0
36"		53.2	53.2	110.0	120.0
20"	66"	86.7	86.7	110.0	169.0
24"		73.4	73.4	110.0	120.0
28"		64.2	64.2	110.0	120.0
30"		60.6	60.6	110.0	118.2
32"		56.6	56.6	110.0	112.2
20"	72"	66.4	66.4	110.0	120.0
24"		56.1	56.1	109.3	109.3
28"		48.9	48.9	95.3	95.3
30"		46.0	46.0	89.8	89.8
32"		43.6	43.6	85.0	85.0
20"	78"	52.0	52.0	101.3	101.3
24"		43.8	43.8	85.4	85.4
28"		38.1	38.1	74.3	74.3
20"	84"	41.5	41.5	80.8	80.8
24"		34.9	34.9	68.0	68.0
19-1/8"	26"	110.0	190.0	110.0	210.0
26-1/2"		110.0	190.0	110.0	210.0
37"		110.0	140.2	110.0	210.0
19-1/8"	38-3/8"	110.0	179.3	110.0	210.0
26-1/2"		110.0	130.2	110.0	210.0
37"		83.7	83.7	110.0	120.0
19-1/8"	50-5/8"	110.0	125.8	110.0	210.0
26-1/2"		99.7	99.7	110.0	120.0
37"		61.8	61.8	110.0	120.0
19-1/8"	63"	96.7	96.7	110.0	188.5
26-1/2"		74.9	74.9	110.0	120.0
37"		48.8	48.8	110.0	117.0
19-1/8"	74-1/4"	63.0	63.0	110.0	120.0
26-1/2"		46.6	46.6	90.9	90.9

Engr: DR. HUMAYOUN FAROOQ
STRUCTURES
FLA. PE # 16557

SEP 28 2001

APPROVED AS COMPLYING WITH THE SOUTH FLORIDA BUILDING CODE
DATE November 22, 2001 19
BY
PRODUCT CONTROL DIVISION
BUILDING CODE COMPLIANCE OFFICE
ACCEPTANCE NO. 01-1002.03

AL-FAROOQ CORPORATION
ENGINEERS, PLANNERS & PRODUCT DESIGN
1235 SW 87 AVE
MIAMI, FLORIDA 33174
TEL. (305) 264-8100 FAX. (305) 262-6978

COMP-ANL\W98-100CGI

SERIES-238 ALUMINUM CASEMENT WINDOW

CONSTRUCTION GLASS IND. CORP.
7840 N.W. 62 nd STREET
MIAMI, FL. 33166
TEL. (305) 593-6590 FAX. (305) 593-6592

revisions:

no	date	by	description
A	09.27.01		CHARTS REV. PER ASTM E-1300

date: 12-04-98
scale: 1/2" = 1"
dr. by: HAMID
chk. by:

drawing no.
W98-100

sheet 3A of 6

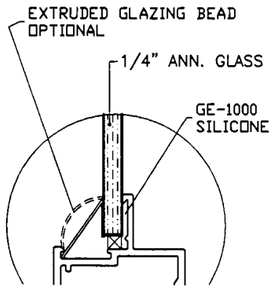

1/4" NOMINAL
GLASS TYPE '4'

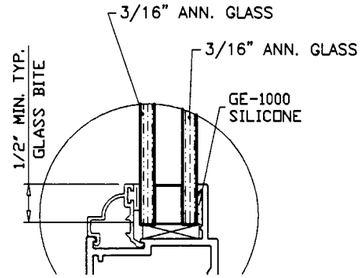

3/4" OVERALL INSUL. ANN.
ALT. GLASS TYPE '4A'

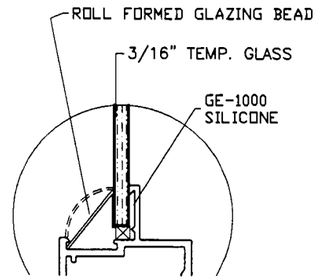

3/16" NOMINAL
GLASS TYPE '5'

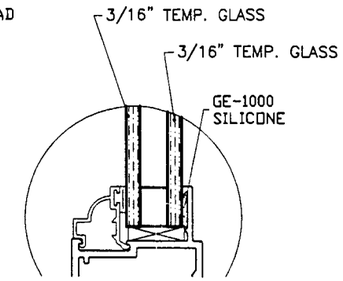

3/4" OVERALL INSUL. TEMP.
ALT. GLASS TYPE '5A'

PERFORMANCE VALUES OF NON-IMPACT RESISTANT WINDOWS
DADE COUNTY APPROVED IMPACT RESISTANT SHUTTERS REQUIRED
REFER TO SHEETS 5 AND 6 FOR INSTALLATION DETAILS

WINDOW DIMS.		GLASS TYPE '4'		GLASS TYPE '4A'		GLASS TYPE '5' & '5A'	
WIDTH	HEIGHT	EXT. (+)	INT. (−)	EXT. (+)	INT. (−)	EXT. (+)	INT. (−)
20"	36"	110.0	167.0	110.0	190.0	110.0	210.0
24"		110.0	161.9	110.0	161.9	110.0	210.0
28"		110.0	138.8	110.0	138.8	110.0	210.0
30"		110.0	127.6	110.0	129.5	110.0	210.0
32"		110.0	117.4	110.0	121.4	110.0	210.0
36"		100.6	100.6	110.0	107.9	110.0	210.0
40"		88.6	88.6	110.0	97.1	110.0	189.4
42"		83.9	83.9	110.0	92.5	110.0	180.4
20"	42"	110.0	154.4	110.0	154.4	110.0	210.0
24"		110.0	137.2	110.0	137.2	110.0	210.0
28"		110.0	117.0	110.0	118.9	110.0	210.0
30"		105.8	105.8	110.0	111.0	110.0	210.0
32"		96.5	96.5	110.0	104.1	110.0	202.9
36"		83.9	83.9	110.0	92.5	110.0	180.4
40"		75.5	75.5	109.4	83.3	110.0	162.3
42"		72.1	72.1	106.0	79.3	110.0	154.6
20"	48"	110.0	130.0	110.0	130.0	110.0	210.0
24"		110.0	114.3	110.0	114.3	110.0	210.0
28"		100.2	100.2	103.8	103.8	110.0	202.4
30"		90.7	90.7	99.8	97.1	110.0	189.4
32"		83.3	83.3	96.5	91.1	110.0	177.6
36"		73.4	73.4	91.5	80.9	110.0	157.8
40"		66.6	66.6	88.2	72.8	110.0	142.0
42"		63.8	63.8	87.1	69.4	110.0	135.3
20"	54"	110.0	112.3	110.0	112.3	110.0	210.0
24"		98.0	98.0	98.0	98.0	110.0	191.1
28"		88.2	88.2	88.2	88.2	110.0	172.0
30"		80.2	80.2	84.4	84.4	110.0	164.7
32"		73.8	73.8	81.2	80.9	110.0	157.8
36"		64.6	64.6	76.2	71.9	110.0	140.3
40"		59.5	59.5	72.6	64.8	110.0	126.3
42"		57.3	57.3	71.3	61.7	110.0	120.3

PERFORMANCE VALUES OF NON-IMPACT RESISTANT WINDOWS
DADE COUNTY APPROVED IMPACT RESISTANT SHUTTERS REQUIRED
REFER TO SHEETS 5 AND 6 FOR INSTALLATION DETAILS

WINDOW DIMS.		GLASS TYPE '4'		GLASS TYPE '4A'		GLASS TYPE '5' & '5A'	
WIDTH	HEIGHT	EXT. (+)	INT. (−)	EXT. (+)	INT. (−)	EXT. (+)	INT. (−)
20"	60"	98.8	98.8	98.8	98.8	110.0	192.6
24"		85.8	85.8	85.8	85.8	110.0	167.2
28"		76.7	76.7	76.7	76.7	110.0	149.6
30"		73.0	73.0	73.2	73.2	110.0	142.7
32"		66.2	66.2	70.2	70.2	110.0	136.8
36"		57.7	57.7	65.3	64.8	110.0	126.3
20"	66"	86.7	86.7	86.7	86.7	110.0	169.0
24"		73.4	73.4	73.4	73.4	110.0	143.2
28"		64.2	64.2	64.2	64.2	110.0	125.2
30"		60.6	60.6	60.6	60.6	110.0	118.2
32"		57.5	57.5	57.5	57.5	110.0	112.2
20"	72"	66.4	66.4	66.4	66.4	110.0	129.4
24"		56.1	56.1	56.1	56.1	109.3	109.3
28"		48.9	48.9	48.9	48.9	95.3	95.3
30"		46.0	46.0	46.0	46.0	89.8	89.8
32"		43.6	43.6	43.6	43.6	85.0	85.0
20"	78"	52.0	52.0	52.0	52.0	101.3	101.3
24"		43.8	43.8	43.8	43.8	85.4	85.4
28"		38.1	38.1	38.1	38.1	74.3	74.3
20"	84"	41.5	41.5	41.5	41.5	80.8	80.8
24"		34.9	34.9	34.9	34.9	68.0	68.0
19-1/8"	26"	110.0	167.0	110.0	210.0	110.0	210.0
26-1/2"		110.0	167.0	110.0	203.0	110.0	210.0
37"		110.0	145.4	110.0	145.4	110.0	210.0
19-1/8"	38-3/8"	110.0	167.0	110.0	179.3	110.0	210.0
26-1/2"		110.0	137.5	110.0	137.5	110.0	210.0
37"		89.9	89.9	110.0	98.5	110.0	192.1
19-1/8"	50-5/8"	110.0	125.8	110.0	125.8	110.0	210.0
26-1/2"		99.7	99.7	99.7	99.7	110.0	194.5
37"		67.8	67.8	83.1	74.7	110.0	145.6
19-1/8"	63"	96.7	96.7	96.7	96.7	110.0	188.5
26-1/2"		74.9	74.9	74.9	74.9	110.0	146.1
37"		53.6	53.6	60.0	60.0	110.0	117.0
19-1/8"	74-1/4"	63.0	63.0	63.0	63.0	110.0	122.9
26-1/2"		46.6	46.6	46.6	46.6	90.9	90.9

Engr: DR. HUMAYOUN FAROOQ
STRUCTURES
FLA. PE # 16557

10-17-01

APPROVED AS COMPLYING WITH THE SOUTH FLORIDA BUILDING CODE
DATE November 22, 2001 19
BY
PRODUCT CONTROL DIVISION
BUILDING CODE COMPLIANCE OFFICE
ACCEPTANCE NO. 01-1002.03

AL-FAROOQ CORPORATION
ENGINEERS, PLANNERS & PRODUCT DESIGN
1235 SW 87 AVE
MIAMI, FLORIDA 33174
TEL. (305) 264-8100 FAX. (305) 262-6978

COMP-ANL\W98-100CGI

SERIES-238 ALUMINUM CASEMENT WINDOW

CONSTRUCTION GLASS IND. CORP.
7840 N.W. 62 nd STREET
MIAMI, FL. 33166
TEL. (305) 593-6590 FAX. (305) 593-6592

revisions:

no	date	by	description
A	09.27.01		CHARTS REV. PER ASTM E-1300

date: 12-04-98
scale: 1/2" = 1"
dr. by: HAMID
chk. by:

drawing no.
W98-100

INSTALLATION CONDITIONS (APPLIES TO ALL FOUR SIDES)

FOR ANCHOR PERFORMANCE VALUES SEE SHEET 6

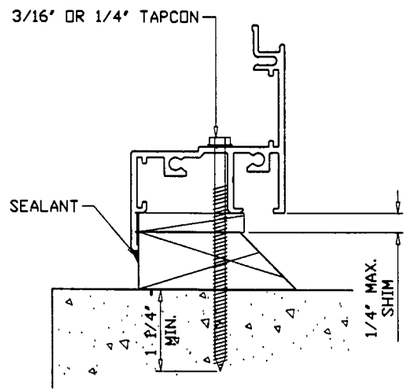

INSTALLATION TYPE '1'

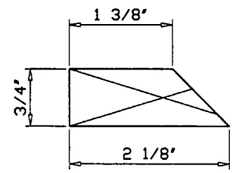

WOOD BUCK TYPE '1'

MATERIAL: PRESSURE TREATED

TYPICAL INSTALLATION DETAIL
ON ALL FOUR SIDES/USING WOOD

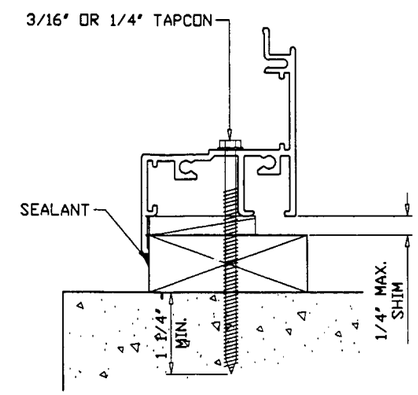

INSTALLATION TYPE '2'

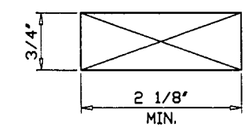

WOOD BUCK TYPE '2'

MATERIAL: PRESSURE TREATED

TYPICAL INSTALLATION DETAIL
ON ALL FOUR SIDES/USING WOOD

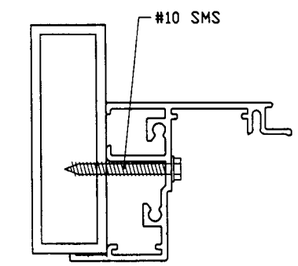

ATTACHMENT TO
APPROVED MULLIONS

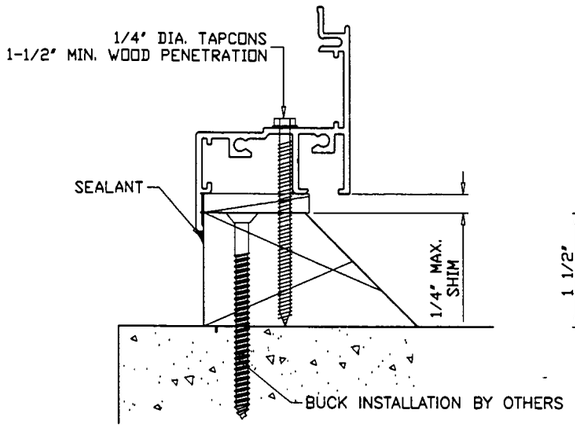

INSTALLATION TYPE '3'

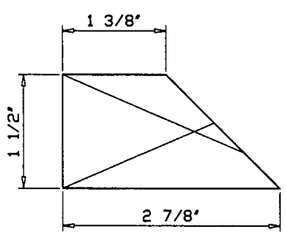

WOOD BUCK TYPE '3'

MATERIAL: PRESSURE TREATED

TYPICAL INSTALLATION DETAIL
ON ALL FOUR SIDES/USING WOOD

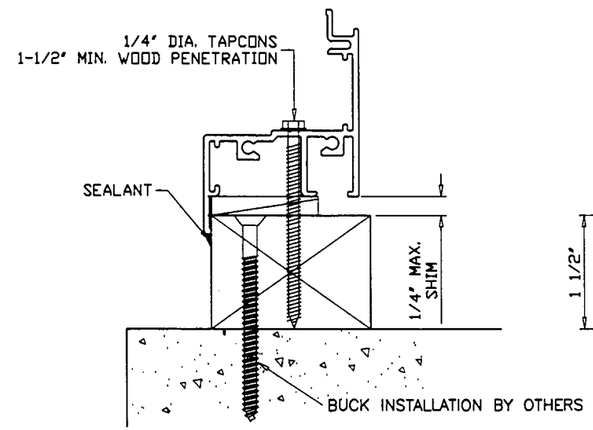

INSTALLATION TYPE '4'

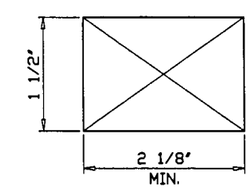

WOOD BUCK TYPE '4'

MATERIAL: PRESSURE TREATED

TYPICAL INSTALLATION DETAIL
ON ALL FOUR SIDES/USING WOOD

WOOD BUCKS NOT BY CGI CORP., MUST SUSTAIN LOADS IMPOSED BY GLAZING SYSTEM AND TRANSFER THEM TO THE BUILDING STRUCTURE.

Engr: DR. HUMAYOUN FAROOQ
STRUCTURES
FLA. PE # 16557

SEP 28 2001

APPROVED AS COMPLYING WITH THE SOUTH FLORIDA BUILDING CODE
DATE November 22, 2001 19
BY
PRODUCT CONTROL DIVISION
BUILDING CODE COMPLIANCE OFFICE
ACCEPTANCE NO. 01-1002.03

AL-FAROOQ CORPORATION
ENGINEERS, PLANNERS & PRODUCT DESIGN
1235 SW 87 AVE
MIAMI, FLORIDA 33174
TEL. (305) 264-8100 FAX. (305) 262-6978
COMP-ANL\W98-100CGI

SERIES-238 ALUMINUM CASEMENT WINDOW

CONSTRUCTION GLASS IND. CORP.
7840 N.W. 62 nd STREET
MIAMI, FL. 33166
TEL. (305) 593-6590 FAX. (305) 593-6592

revisions:

no	date	by	description
A	09.27.01		REVISED

date: 12-04-98
scale: 1/2" = 1"
dr. by: HAMID
chk. by:

drawing no.
W98-100

PERFORMANCE VALUES FOR INSTALLATION OF
ANCHORS TYPE 'A' 'B' OR 'C'
REFER TO SHEET 5 FOR DETAILS

WINDOW DIMS. WIDTH	WINDOW DIMS. HEIGHT	ANCHOR 'A'	ANCHOR 'B'	ANCHOR 'C'
20"	36"	210.0	210.0	210.0
24"		198.0	210.0	210.0
28"		169.7	203.1	210.0
30"		158.4	189.6	210.0
32"		148.5	177.8	207.0
36"		132.0	158.0	184.0
40"		113.1	135.4	157.7
42"		105.6	126.4	147.2
20"	42"	190.1	210.0	210.0
24"		158.4	189.6	210.0
28"		135.8	162.5	189.3
30"		126.7	151.7	176.6
32"		118.8	142.2	165.6
36"		105.6	126.4	147.2
40"		95.0	113.8	132.5
42"		90.5	108.3	126.2
20"	48"	210.0	210.0	210.0
24"		198.0	210.0	210.0
28"		169.7	203.1	210.0
30"		158.4	189.6	210.0
32"		148.5	177.8	207.0
36"		132.0	158.0	184.0
40"		118.8	142.2	165.6
42"		113.1	135.4	157.7
20"	54"	203.7	210.0	210.0
24"		169.7	203.1	210.0
28"		145.5	174.1	202.8
30"		135.8	162.5	189.3
32"		127.3	152.4	177.4
36"		113.1	135.4	157.7
40"		101.8	121.9	141.9
42"		97.0	116.1	135.2

PERFORMANCE VALUES FOR INSTALLATION OF
ANCHORS TYPE 'A' 'B' OR 'C'
REFER TO SHEET 5 FOR DETAILS

WINDOW DIMS. WIDTH	WINDOW DIMS. HEIGHT	ANCHOR 'A'	ANCHOR 'B'	ANCHOR 'C'
20"	60"	178.2	210.0	210.0
24"		148.5	177.8	207.0
28"		127.3	152.4	177.4
30"		118.8	142.2	165.6
32"		111.4	133.3	155.3
36"		99.0	118.5	138.0
20"	66"	210.0	210.0	210.0
24"		176.0	210.0	210.0
28"		150.9	180.6	210.0
30"		140.8	168.5	196.3
32"		132.0	158.0	184.0
20"	72"	190.1	210.0	210.0
24"		158.4	189.6	210.0
28"		135.8	162.5	189.3
30"		126.7	151.7	176.6
32"		118.8	142.2	165.6
20"	78"	172.8	206.8	210.0
24"		144.0	172.4	200.7
28"		123.4	147.4	172.1
20"	84"	198.0	210.0	210.0
24"		165.0	197.5	210.0
19-1/8"	26"	210.0	210.0	210.0
26-1/2"		210.0	210.0	210.0
37"		175.5	210.0	210.0
19-1/8"	38-3/8"	210.0	210.0	210.0
26-1/2"		163.2	195.3	210.0
37"		116.9	139.9	164.7
19-1/8"	50-5/8"	210.0	210.0	210.0
26-1/2"		167.1	200.1	210.0
37"		119.7	143.3	168.7
19-1/8"	63"	175.4	209.9	210.0
26-1/2"		126.6	151.5	178.4
37"		90.7	108.5	127.7
19-1/8"	74-1/4"	191.6	210.0	210.0
26-1/2"		138.3	165.5	194.8

ANCHORS:

AT 6" FROM CORNERS AND 17" O.C. MAX. SPACING.

TYPE 'A'= 3/16" TAPCONS

THRU 1BY WOOD BUCKS INTO MASONRY OR DIRECTLY INTO CONC. OR MASONRY 1-1/4" MIN. MASONRY EMBED

3/16" SELF DRILLING (TEKS) SCREWS

INTO METAL STRUCTURES

TYPE 'B'= 1/4" TAPCONS

INTO 2BY BUCKS OR WOOD STRUCTURES 1-1/2" MIN. WOOD EMBEDMENT

TYPE 'C'= 1/4" TAPCONS

THRU 1BY WOOD BUCKS INTO MASONRY OR DIRECTLY INTO CONC. OR MASONRY 1-1/4" MIN. MASONRY EMBED

#10 SMS

INTO DADE COUNTY APPROVED MULLIONS

#14 SMS

INTO METAL STRUCTURES

TAPCONS AS MANUFACTURED BY ELCO.

Engr: DR. HUMAYOUN FAROOQ
STRUCTURES
FLA. PE # 16557

SEP 28 2001

APPROVED AS COMPLYING WITH THE SOUTH FLORIDA BUILDING CODE
DATE November 22, 2001
BY
PRODUCT CONTROL DIVISION
BUILDING CODE COMPLIANCE OFFICE
ACCEPTANCE NO. 01-1002.03

AL-FAROOQ CORPORATION
ENGINEERS, PLANNERS & PRODUCT DESIGN
1235 SW 87 AVE
MIAMI, FLORIDA 33174
TEL. (305) 264-8100 FAX. (305) 262-6978
COMP-ANL\W98-100CGI

SERIES-238 ALUMINUM CASEMENT WINDOW

CONSTRUCTION GLASS IND. CORP.
7840 N.W. 62 nd STREET
MIAMI, FL. 33166
TEL. (305) 593-6590 FAX. (305) 593-6592

revisions:

no	date	by	description
A	09.27.01		CHARTS REV. PER 1997 NDS

date: 12-04-98
scale: 1/2" = 1"
dr. by: HAMID
chk. by:

drawing no.
W98-100