MIAMI-DADE

MIAMI-DADE COUNTY, FLORIDA
METRO-DADE FLAGLER BUILDING

BUILDING CODE COMPLIANCE OFFICE
METRO-DADE FLAGLER BUILDING
140 WEST FLAGLER STREET, SUITE 1603
MIAMI, FLORIDA 33130-1563
(305) 375-2901 FAX (305) 375-2908

CONTRACTOR LICENSING SECTION
(305) 375-2527 FAX (305) 375-2558

CONTRACTOR ENFORCEMENT DIVISION
(305) 375-2966 FAX (305) 375-2908

PRODUCT CONTROL DIVISION
(305) 375-2902 FAX (305) 372-6339

PRODUCT CONTROL NOTICE OF ACCEPTANCE

Hurd Millwork Company
575 S. Whelen Avenue
Medford ,WI 54451

Your application for Notice of Acceptance (NOA) of:
Aluminum Clad Wood Fixed Window -Impact
under Chapter 8 of the Code of Miami-Dade County governing the use of Alternate Materials and Types of Construction, and completely described herein, has been recommended for acceptance by the Miami-Dade County Building Code Compliance Office (BCCO) under the conditions specified herein.

This NOA shall not be valid after the expiration date stated below. BCCO reserves the right to secure this product or material at any time from a jobsite or manufacturer's plant for quality control testing. If this product or material fails to perform in the approved manner, BCCO may revoke, modify, or suspend the use of such product or material immediately. BCCO reserves the right to revoke this approval, if it is determined by BCCO that this product or material fails to meet the requirements of the South Florida Building Code.

The expense of such testing will be incurred by the manufacturer.

ACCEPTANCE NO.: 01-1012.02
EXPIRES: 01/10/2007

Raul Rodriguez
Chief Product Control Division

THIS IS THE COVERSHEET, SEE ADDITIONAL PAGES FOR SPECIFIC AND GENERAL CONDITIONS
BUILDING CODE & PRODUCT REVIEW COMMITTEE

This application for Product Approval has been reviewed by the BCCO and approved by the Building Code and Product Review Committee to be used in Miami-Dade County, Florida under the conditions set forth above.

Francisco J. Quintana, R.A.
Director
Miami-Dade County
Building Code Compliance Office

APPROVED: 01/10/2002

Hurd Millwork Co. Inc.

ACCEPTANCE No.: 01-1012.02

APPROVED : January 10, 2002

EXPIRES : January 10, 2007

NOTICE OF ACCEPTANCE: SPECIFIC CONDITIONS

1. SCOPE

1.1 This approves a wood fixed window as described in Section 2 of this Notice of Acceptance, designed to comply with the South Florida Building Code, (SFBC), 1994 Edition for Miami-Dade County, for the locations where the pressure requirements, as determined by SFBC Chapter 23, do not exceed the Design Pressure Rating values indicated in the approved drawings.

2. PRODUCT DESCRIPTION

2.1 The series **Aluminum Clad Wood Fixed Window-Large Missile Impact Resistant** and its components shall be constructed in strict compliance with the following documents: Drawing No **1045**, titled "Aluminum Clad Wood Direct Glazed Impact Windows" Sheets 1 through 4 of 4, dated 06-30-2001, prepared by W. W. Schaefer Engineering & Consulting, P. A. , signed and sealed by Warren W. Schaefer, P. E., bearing the Miami-Dade County Product Control approval stamp with the Notice of Acceptance number and approval date by the Miami-Dade County Product Control Division. These documents shall hereinafter be referred to as the approved drawings.

3. LIMITATIONS

3.1 This approval applies to single unit applications of wood fixed window, as shown in approved drawings.

4. INSTALLATION

4.1 The wood fixed window and its components shall be installed in strict compliance with the approved drawings.

4.2 Hurricane protection system (shutters): the installation of this unit **will not require** a hurricane protection system.

5. LABELING

5.1 Each unit shall bear a permanent label with the manufacturer's name or logo, city, state and following statement: "Miami-Dade County Product Control Approved".

6. BUILDING PERMIT REQUIREMENTS

6.1 Application for building permit shall be accompanied by two copies of the following:

- **6.1.1** This Notice of Acceptance.
- **6.1.2** Duplicate copies of the approved drawings, as identified in section 2 of this Notice of Acceptance, clearly marked to show the components selected for the proposed installation.
- **6.1.3** Any other documents required by the Building Official or the South Florida Building Code (SFBC) in order to properly evaluate the installation of this system.

Ishaq I. Chanda

Ishaq I. Chanda, P.E. Product Control Examiner
Product Control Division

Hurd Millwork Co. Inc.

ACCEPTANCE No.: 01-1012.02

APPROVED : January 10, 2002

EXPIRES : January 10, 2007

NOTICE OF ACCEPTANCE: EVIDENCE SUBMITTED

1. Renewal of this Acceptance (approval) shall be considered after a renewal application has been filed and the original submitted documentation, including test supporting data, engineering documents, are no older than eight (8) years.

2. Any and all approved products shall be permanently labeled with the manufacturer's name, city, state, and the following statement: "Miami-Dade County Product Control Approved", or as specifically stated in the specific conditions of this Acceptance.

3. Renewals of Acceptance will not be considered if:
   a) There has been a change in the South Florida Building Code affecting the evaluation of this product and the product is not in compliance with the code changes;
   b) The product is no longer the same product (identical) as the one originally approved.
   c) If the Acceptance holder has not complied with all the requirements of this acceptance, including the correct installation of the product;
   d) The engineer who originally prepared, signed and sealed the required documentation initially submitted, is no longer practicing the engineering profession.

4. Any revision or change in the materials, use, and/or manufacture of the product or process shall automatically be cause for termination of this Acceptance, unless prior written approval has been requested (through the filing of a revision application with appropriate fee) and granted by this office.

5. Any of the following shall also be grounds for removal of this Acceptance:
   a) Unsatisfactory performance of this product or process;
   b) Misuse of this Acceptance as an endorsement of any product, for sales, advertising or any other purpose.

6. The Notice of Acceptance number preceded by the words Dade County, Florida, and followed by the expiration date may be displayed in advertising literature. If any portion of the Notice of Acceptance is displayed, then it shall be done in its entirety.

7. A copy of this Acceptance as well as approved drawings and other documents, where it applies, shall be provided to the user by the manufacturer or its distributors and shall be available for inspection at the job site at all times. The engineer does not need to reseal the copies.

8. Failure to comply with any section of this Acceptance shall be cause for termination and removal of Acceptance.

8. This Acceptance contains pages 1, 2, this last page 3.

Ishaq I. Chanda

Ishaq I. Chanda, P.E. Product Control Examiner
Product Control Division

END OF THIS ACCEPTANCE

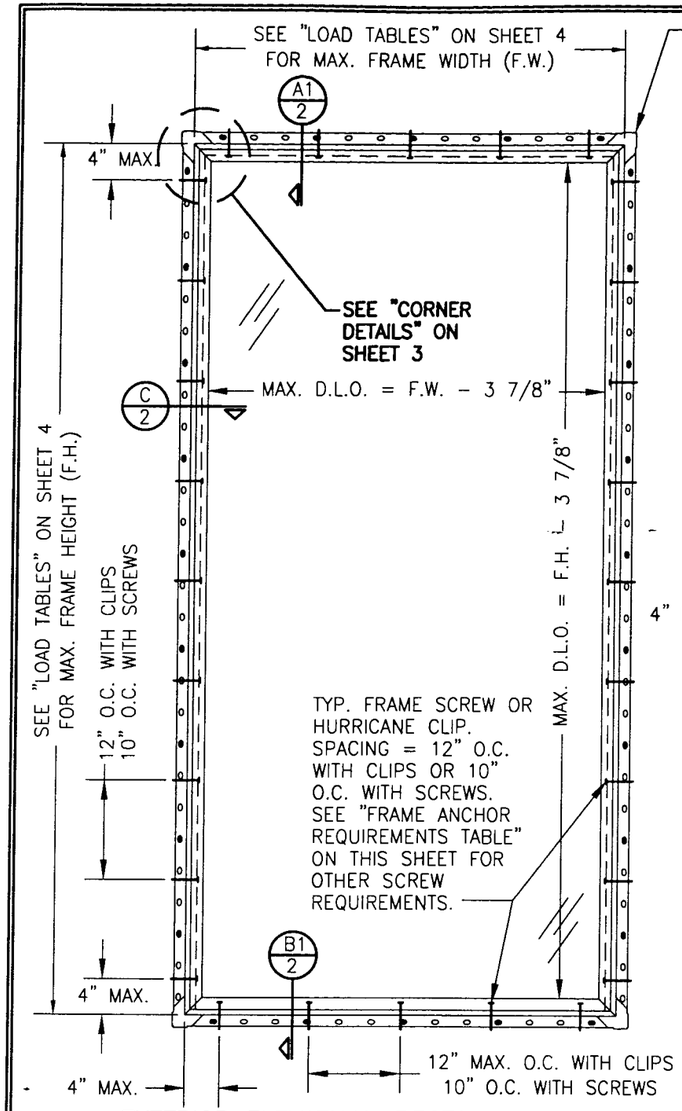

EXTERIOR ELEVATION; RECTANGULAR WINDOW

SCALE: 3/4"=1'-0"

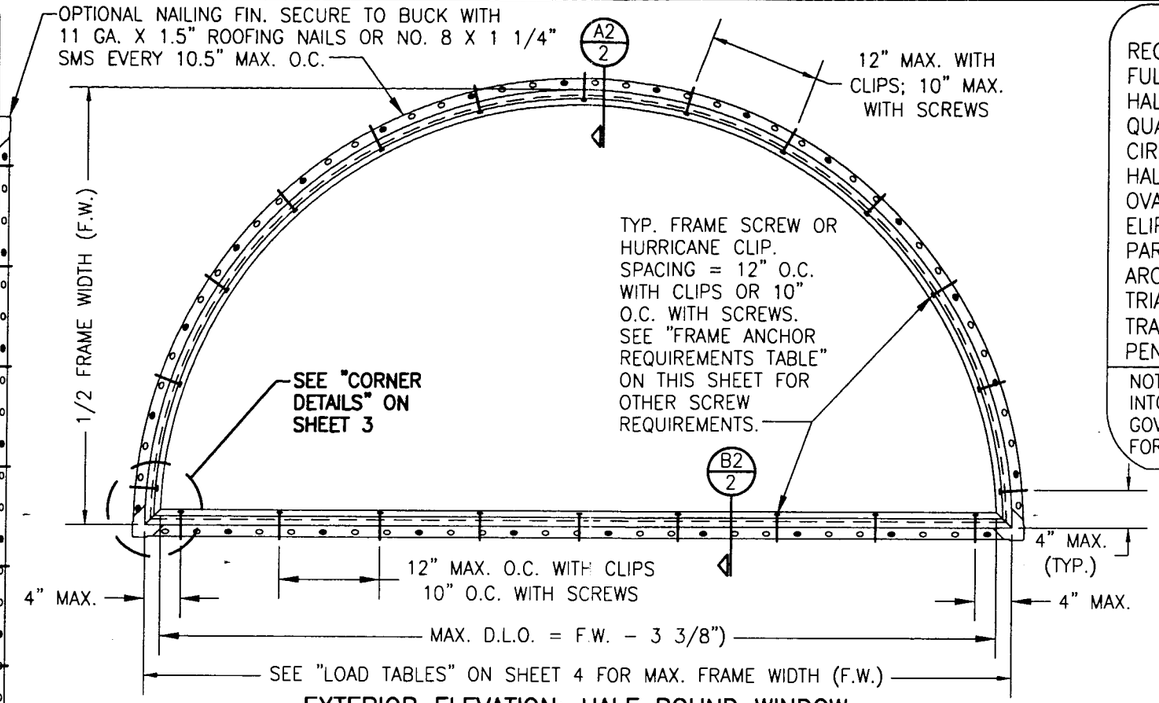

EXTERIOR ELEVATION; HALF ROUND WINDOW

(OTHER RADIUS/CURVE SHAPES SIMILAR)

SCALE: 3/4"=1'-0"

NOTE: MAX. SHAPE UNIT SIZES MUST FIT INSCRIBED INSIDE THE ALLOWABLE RECTANGULAR UNIT SIZES.

FOR ALLOWABLE DESIGN WIND PRESSURE ON SINGLE WINDOWS, SEE LOAD TABLES ON SHEET 4

APPROVED SHAPES

RECTANGULAR	OCTAGON
FULL CIRCLE	CATHEDRAL/GOTHIC
HALF CIRCLE	EXTENDED ELIPTICAL
QUARTER CIRCLE	MITERED CORNER
CIRCLE TOP	PARALLELOGRAM
HALF CIRCLE TOP	INVERTED CIRCLE TOP
OVAL	INVERTED ARCH TOP
ELIPTICAL	EXTENDED HALF ROUND
PARTIAL ELIPTICAL	EXTENDED SEGMENTAL
ARCH TOP	QUARTERFOIL
TRIANGULAR	PARTIAL ARCH
TRAPEZOID	EYEBROW
PENTAGON	

NOTE: ALL SHAPED UNITS MUST FIT INSCRIBED INTO THE ALLOWABLE RECTANGULAR UNITS & BE GOVERNED BY THE ALLOWABLE PRESSURE OF FOR THE RESPECTIVE RECTANGULAR UNIT.

GENERAL NOTES

1. THESE WINDOW SYSTEMS HAVE BEEN TESTED, ANALYZED AND APPROVED FOR DESIGN PRESSURES NOT TO EXCEED THOSE SHOWN IN THE "ALLOWABLE DESIGN LOADS" TABLE.
2. BUCKING, OPENINGS & BUCKING FASTENERS MUST BE PROPERLY DESIGNED & INSTALLED TO TRANSFER WIND LOADS TO THE STRUCTURE.
3. ALL HARDWARE & FASTENERS SHALL BE IN ACCORDANCE WITH THESE DRAWINGS & MAY NOT VARY UNLESS SPECIFICALLY MENTIONED ON THE DRAWINGS.
4. THE DETAILS & SPECIFICATIONS SHOWN HEREIN REPRESENT THE PRODUCTS TESTED & PROPOSED FOR WATER, AIR, IMPACT, CYCLIC & UNIFORM STATIC AIR PRESSURE TESTING IN CONFORMANCE WITH DADE COUNTY PROTOCOLS PA 201, 202 & 203 FOR LARGE MISSILE IMPACT WINDOWS.
5. THESE WINDOW SYSTEMS HAVE BEEN DESIGNED IN ACCORDANCE WITH THE SOUTH FLORIDA BUILDING CODE, 1994 MIAMI-DADE COUNTY EDITION.
6. IMPACT SHUTTERS ARE NOT REQUIRED WITH THESE WINDOWS.
7. ALL ANCHORS SHALL BE INSTALLED AS SPECIFIED ON THESE DRAWINGS. SPECIFIED EMBEDMENT TO BASE MATERIAL SHALL BE BEYOND WALL FINISH OR STUCCO.

FRAME ANCHOR REQUIREMENTS TABLE

OPENING TYPE (SUBSTRATE)	JAMB TO OPENING FASTENER TYPE	MINIMUM EMBEDMENT	MINIMUM EDGE DIST.
2X_ WOOD FRAME OR BUCK	NO. 10 SMS SCREW	1 3/8"	1"
CMU/CONCRETE	1/4" TAPCON	1 1/4"	2"

ANCHOR NOTE: FRAME MAY BE EITHER DIRECT MOUNTED TO THE OPENING, MOUNTED ONTO A 1X4 P.T. CONTINUOUS SPACER, OR ANCHORED TO A MIN. 2X4 NO. 2 SOUTHERN PINE WOOD BUCK. WHEN ANCHORED TO A 2X4 BUCK, NO. 10 SCREWS SHALL BE USED. WHEN DIRECT MOUNTED OR MOUNTED WITH SPACER, 1/4" TAPCONS SHALL BE USED. SEE "ANCHOR REQUIREMENTS TABLE" FOR EMBED REQUIREMENTS. PROPER MATERIAL SHALL BE USED BETWEEN ALL DISIMILAR MATERIALS (BLOCK/CONCRETE & ALUMINUM).

APPROVED AS COMPLYING WITH THE SOUTH FLORIDA BUILDING CODE
DATE January 10, 2002
BY Ishaq I. Chanda
PRODUCT CONTROL DIVISION
BUILDING CODE COMPLIANCE OFFICE
ACCEPTANCE NO. 01-1012.02

DRAWN BY: W.W.S.	CHECKED BY: W.W.S.
PLOT: 1=16	DATE: 06/30/01

NO.	REVISION DESCRIPTION	BY	DATE

DRAWING TITLE
ALUMINUM CLAD WOOD DIRECT GLAZED IMPACT WINDOWS

MANUFACTURER
HURD MILLWORK CO., INC.
575 S. WHELEN AVE.
MEDFORD, WI 54451
800-433-4873

CONSULTANTS
W. W. SCHAEFER ENGINEERING & CONSULTING, P.A.
600 SANDTREE DRIVE; SUITE 203B
PALM BEACH GARDENS, FL 33403
PHONE: 561-775-4902 FAX: 561-775-4903

CERTIFICATION
NOV 20 2001
WARREN W. SCHAEFER, P.E.
P.E. NO. 44135

DRAWING NO. 1045 REV.

SHEET NO. 1 OF 4

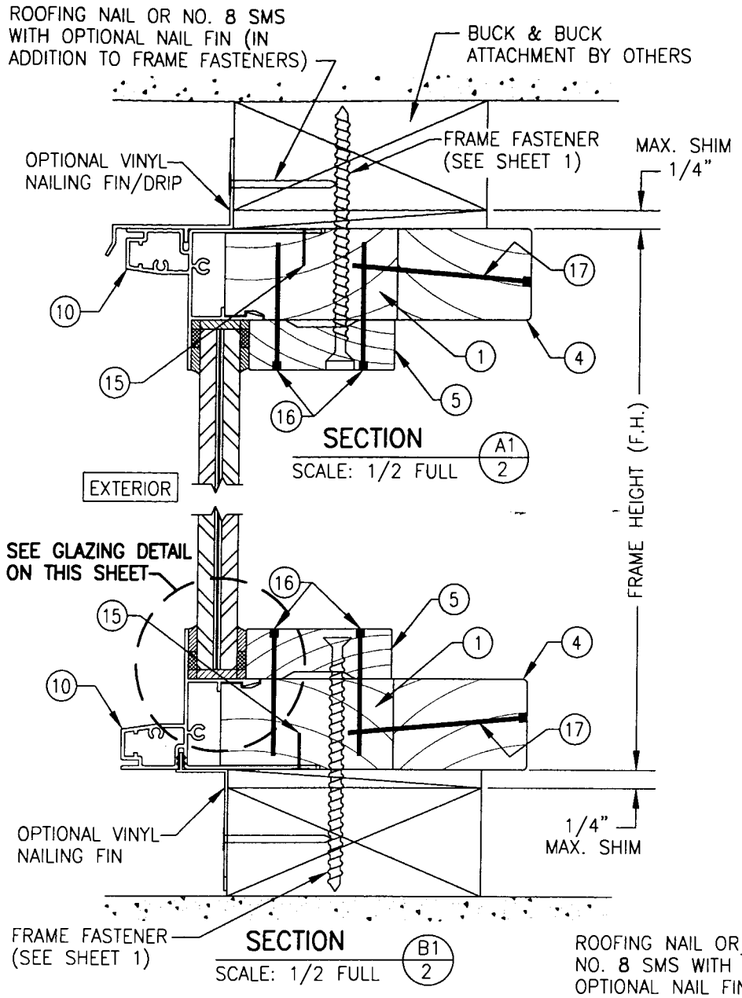

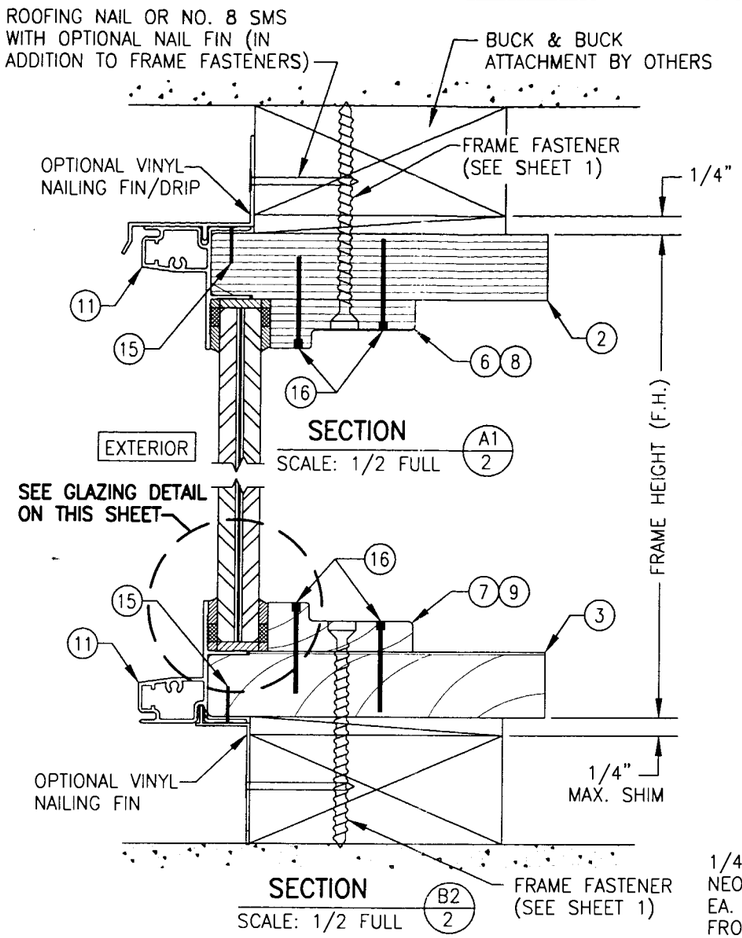

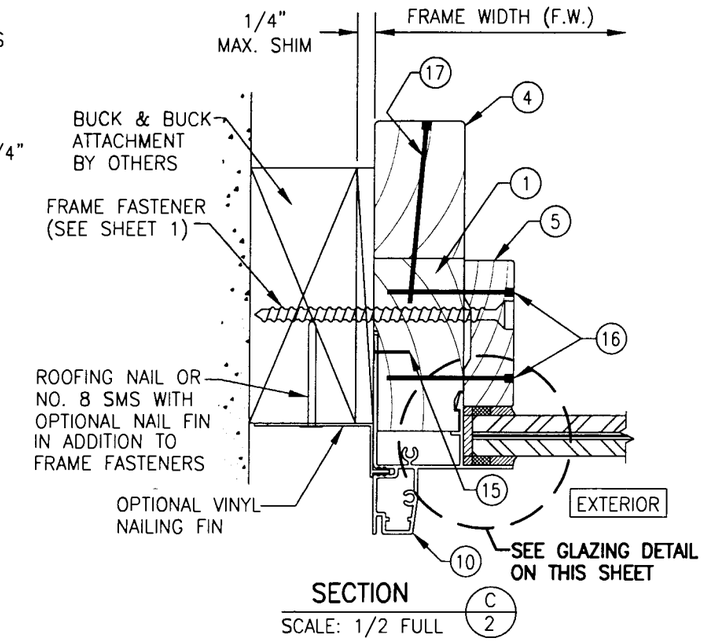

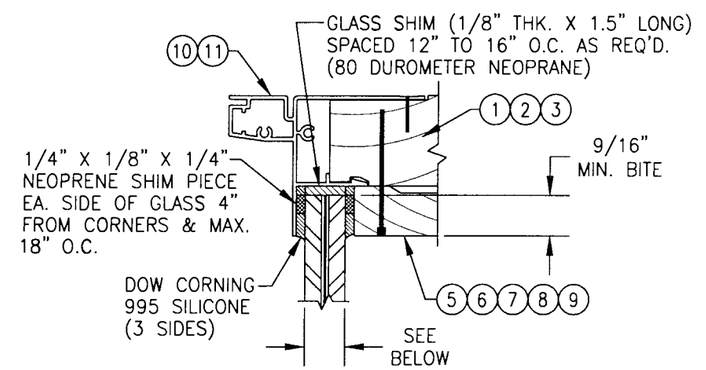

GLAZING DETAIL

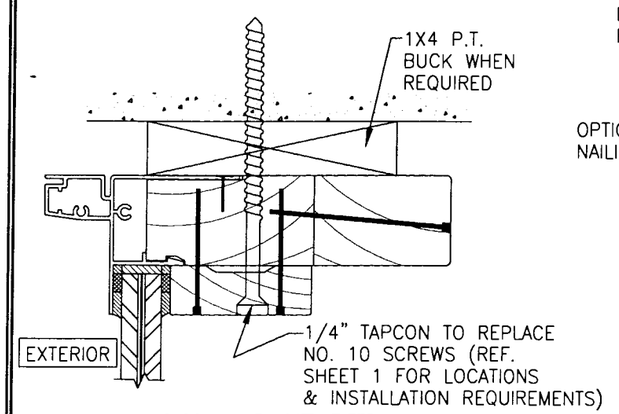

DIRECT MOUNT DETAIL

HEAD DETAIL SHOWN; OTHER JAMBS SIMILAR

SEE SECTIONS FOR DETAIL NOT SHOWN (SIMILAR FOR ALL JAMB TYPES)

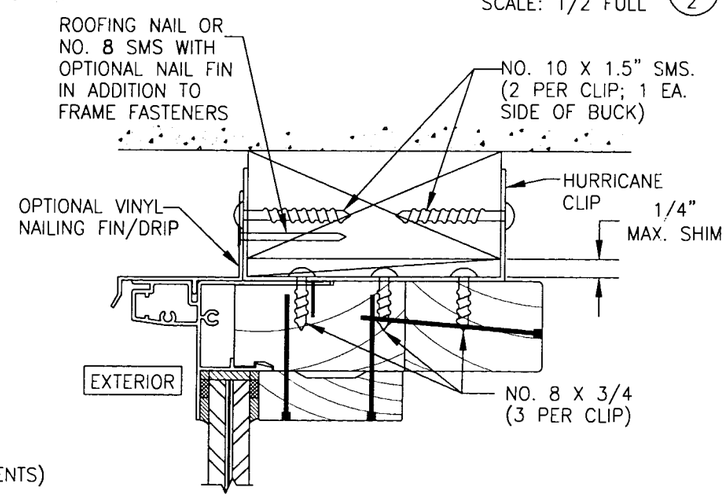

OPTIONAL CLIP INSTALLATION

HEAD DETAIL SHOWN; OTHER JAMBS SIMILAR

SEE SECTIONS FOR DETAIL NOT SHOWN (SIMILAR FOR ALL JAMB TYPES)

CARDINAL SEASTORM TYPE "B" LAMINATED GLASS

OPTION 1) 7/16" THICK OVERALL (3/16" AN/0.015 PVB/0.007 PET/0.075 PVB/3/16" AN)
OPTION 2) 9/16" THICK OVERALL (1/4" AN/0.015 PVB/0.007 PET/0.075 PVB/1/4" AN)
OPTION 3) 9/16" THICK OVERALL (1/4" HS/0.015 PVB/0.007 PET/0.075 PVB/1/4" HS)

DUPONT SENTRY GLASS PLUS (SGP)

OPTION 1) 9/16" THICK OVERALL (1/4" HS/0.09 SGP/1/4" HS)

APPROVED AS COMPLYING WITH THE SOUTH FLORIDA BUILDING CODE
DATE Jan 16, 2002
BY Shaq J. Chanda
PRODUCT CONTROL DIVISION
BUILDING CODE COMPLIANCE OFFICE
ACCEPTANCE NO. 01-1012.02

DRAWN BY: W.W.S.	CHECKED BY: W.W.S.
PLOT: 1=2	DATE: 06/30/01

NO.	REVISION DESCRIPTION	BY	DATE

DRAWING TITLE: ALUMINUM CLAD WOOD DIRECT GLAZED IMPACT WINDOWS

MANUFACTURER: HURD MILLWORK CO., INC.
575 S. WHELEN AVE.
MEDFORD, WI 54451
800-433-4873

CONSULTANTS: W. W. SCHAEFER ENGINEERING & CONSULTING, P.A.
600 SANDTREE DRIVE; SUITE 203B
PALM BEACH GARDENS, FL 33403
PHONE: 561-775-4902 FAX: 561-775-4903

CERTIFICATION
NOV 20 2001
WARREN W. SCHAEFER, P.E.
P.E. NO. 44135

DRAWING NO. 1045 REV.

SHEET NO. 2 OF 4

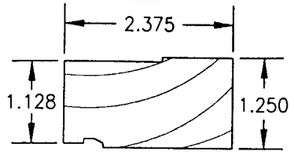

1 RECTANGULAR JAMB

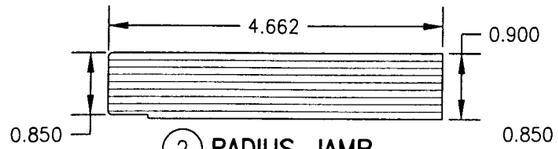

2 RADIUS JAMB

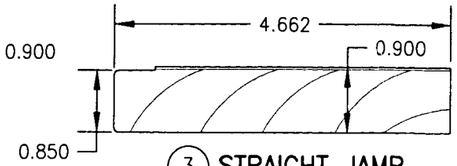

3 STRAIGHT JAMB
(AT CURVED/RADIUS WINDOWS)

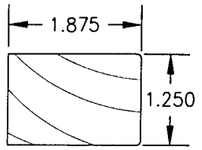

4 JAMB EXTENDER
(AT RECTANGULAR JAMBS)

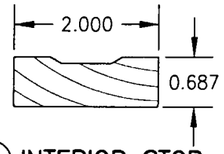

5 INTERIOR STOP
(AT RECTANGULAR UNITS)

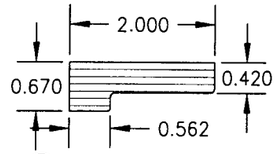

6 INTERIOR STOP
(AT RADIUS UNITS)

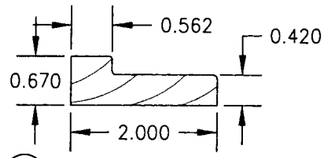

7 INTERIOR STOP
(AT RADIUS UNITS)

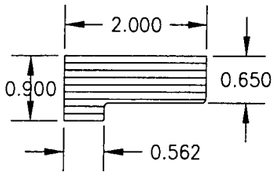

8 INTERIOR STOP
(AT ELIPTICAL UNITS)

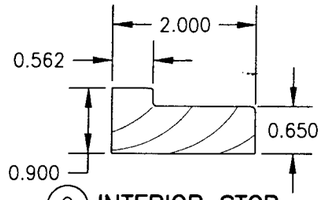

9 INTERIOR STOP
(AT ELIPTICAL UNITS)

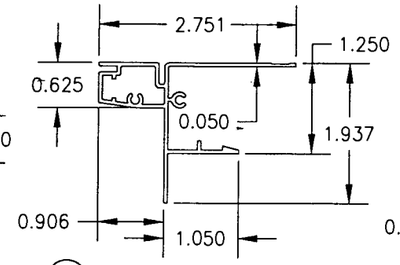

10 JAMB CLAD
(AT RECTANGULAR UNITS)

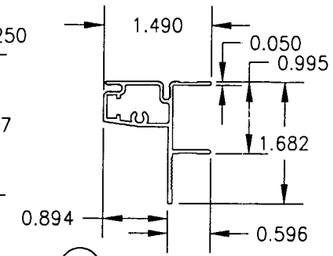

11 JAMB CLAD
(AT CURVED/RADIUS UNITS)

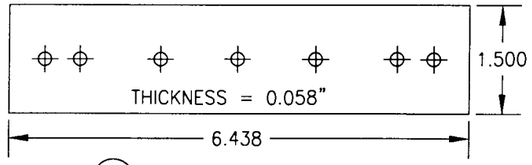

12 HURRICANE CLIP

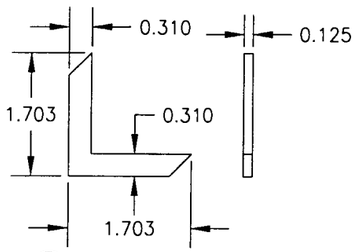

13 CORNER KEY

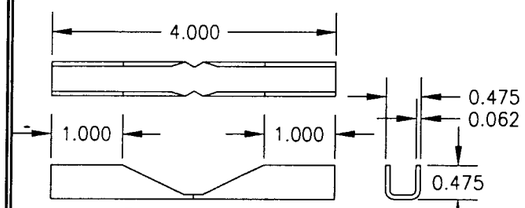

14 CORNER KEY

ITEM #	PART	ITEM DESCRIPTION	MANUFACTURER/NOTES
		PARTS	
1	CDS1	RECTANGULAR WINDOW JAMB	* PONDEROSA/SUGAR PINE
2	CT25	RADIUS JAMB	LVL
3	CT26	STRAIGHT JAMB AT RADIUS/CURVE WINDOWS	* PONDEROSA/SUGAR PINE
4	CDS3	JAMB EXTENDER	* PONDEROSA/SUGAR PINE
5	CDS2	INTERIOR STOP (W/RECTANGULAR JAMBS)	* PONDEROSA/SUGAR PINE
6	CT20	INTERIOR STOP (W/RADIUS JAMBS)	LVL
7	CT20	INTERIOR STOP (W/RADIUS UNITS STRAIGHT JAMB))	* PONDEROSA/SUGAR PINE
8	CT20	INTERIOR STOP (W/ELIPTICAL JAMBS)	LVL
9	CT20	INTERIOR STOP (W/ELIPTICAL UNITS STRAIGHT JAMBS)	* PONDEROSA/SUGAR PINE
10	CDS4	JAMB CLAD (W/RECTANGULAR JAMBS)	6063-T5 ALUMINUM
11	CT1200	JAMB CLAD (W/CURVED/RADIUS JAMBS)	6063-T5 ALUMINUM
12	–	16 GAGE (0.058" THK.) HURRICANE CLIP	STEEL (Fy = 33 ksi MIN.)
13	CDH315	CORNER KEY (W/RECTANGULAR UNITS)	6063-T5 ALUMINUM
14	CCSE1095	CORNER KEY (W/SHAPED UNITS)	6060-T5 ALUMINUM
		MISCELLANEOUS FASTENERS	
15	–	1/2" LG. X 1/8" WIDE CROWN STAPLE	4" FROM CORNER & 6" O.C.
16	–	14 GA. X 1 1/4" T-NAILS	2 NAILS 1" FROM CORNER & 6" O.C.
17	–	14 GA. X 2 1/2" T-NAILS	4" FROM CORNER & 8" O.C.

* WOOD USED WITH TEST UNITS WAS PONDEROSA PINE. ALTERNATE WOOD SPECIES TO BE APPLICABLE WITH THESE WINDOWS IS MIN. GRADE 2 MAHOGANY, SOUTHERN PINE, OAK, CHERRY, MAPLE, DOUGLAS FIR & CYPRUS.

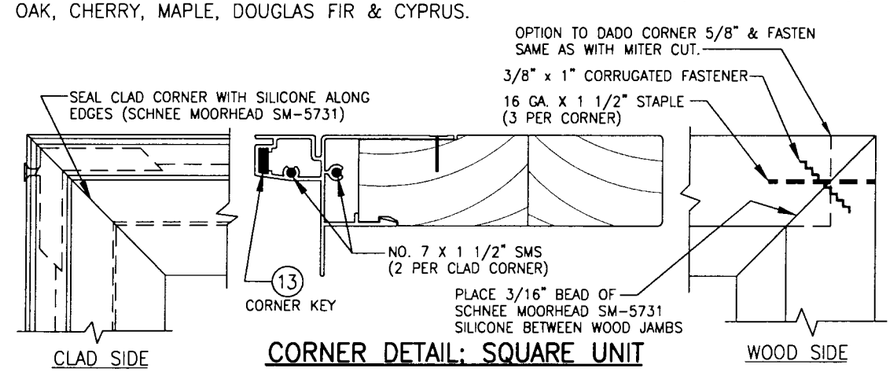

CORNER DETAIL; SQUARE UNIT

MAY OPTION TO SQUARE CUT CORNER OF WOOD JAMB & SECURE SAME AS AT THE "RADIUS TO SQUARE CORNER DETAIL"

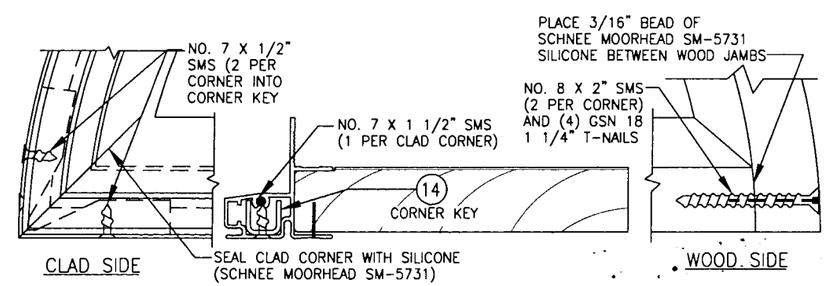

CORNER DETAIL; RADIUS TO SQUARE

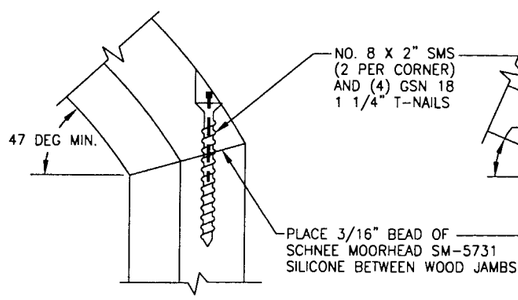

CORNER DETAIL
SEGMENTAL OVER 47 DEG.
JAMB SIDE SIMILAR TO "RADIUS TO SQUARE"

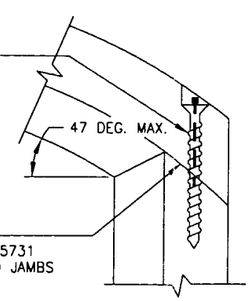

CORNER DETAIL
SEGMENTAL UNDER 47 DEG.
JAMB SIDE SIMILAR TO "RADIUS TO SQUARE"

APPROVED COMPLYING WITH THE SOUTH FLORIDA BUILDING CODE
DATE Jan 10, 2002
BY Ishaq I. Chanda
PRODUCT CONTROL DIVISION
BUILDING CODE COMPLIANCE OFFICE
ACCEPTANCE NO. 01-1012.02

DRAWN BY: W.W.S.	CHECKED BY: W.W.S.
PLOT: 1=2	DATE: 06/30/01

NO.	REVISION DESCRIPTION	BY	DATE

DRAWING TITLE
ALUMINUM CLAD WOOD DIRECT GLAZED IMPACT WINDOWS

MANUFACTURER
HURD MILLWORK CO., INC.
575 S. WHELEN AVE.
MEDFORD, WI 54451
800-433-4873

CONSULTANTS
W. W. SCHAEFER ENGINEERING & CONSULTING, P.A.
600 SANDTREE DRIVE; SUITE 203B
PALM BEACH GARDENS, FL 33403
PHONE: 561-775-4902 FAX: 561-775-4903

CERTIFICATION
NOV 20 2001
WARREN W. SCHAEFER, P.E.
P.E. NO. 44135

DRAWING NO. 1045
REV.
SHEET NO. 3 OF 4

ALLOWABLE DESIGN PRESSURE (WITH CARDINAL 7/16" ANNEALED LAMINATED GLASS)

(1) SHORT DIMENSION	DESIGN LOAD CAPACITY (POSITIVE & NEGATIVE PSF)													
24"	80.0	80.0	80.0	80.0	80.0	80.0	80.0	80.0	80.0	80.0	80.0	80.0	77.8	69.7
30"	80.0	80.0	80.0	80.0	80.0	80.0	80.0	80.0	80.0	80.0	80.0			
36"	80.0	80.0	80.0	80.0	76.4	73.7	71.4	69.5	62.7	66.0				
42"	80.0	80.0	78.0	72.2	67.1	63.0	59.3	56.5						
48"		77.4	70.5	64.4	58.9	54.0								
54"			62.6	57.2										
(1) LONG DIMENSION	42"	48"	54"	60"	66"	72"	78"	84"	90"	96"	108"	120"	132"	144"

ALLOWABLE DESIGN PRESSURE (WITH DUPONT SGP 9/16" HEAT STRENGTHENED LAMINATED GLASS)

(1) SHORT DIMENSION	DESIGN LOAD CAPACITY (POSITIVE & NEGATIVE PSF)										
36"	80.0	80.0	80.0	80.0	80.0	80.0	80.0	80.0	80.0	80.0	80.0
42"	80.0	80.0	80.0	80.0	80.0	80.0	80.0	80.0	80.0	80.0	
48"	80.0	80.0	80.0	80.0	80.0	80.0	80.0	80.0	80.0		
54"	80.0	80.0	80.0	80.0	80.0	80.0	80.0				
60"	80.0	80.0	80.0	80.0	80.0	80.0	80.0				
66"		72.7	72.7	72.7	72.7						
72"		N/A	66.7	66.7							
(1) LONG DIMENSION	60"	66"	72"	78"	84"	90"	96"	108"	120"	132"	144"

ALLOWABLE DESIGN PRESSURE (WITH CARDINAL 9/16" ANNEALED LAMINATED GLASS)

(1) SHORT DIMENSION	DESIGN LOAD CAPACITY (POSITIVE & NEGATIVE PSF)										
30"	80.0	80.0	80.0	80.0	80.0	80.0	80.0	80.0	80.0	80.0	80.0
36"	80.0	80.0	80.0	80.0	80.0	80.0	80.0	80.0	80.0		
42"	80.0	80.0	80.0	80.0	80.0	80.0	80.0	80.0			
48"	80.0	80.0	80.0	80.0	76.7	72.5	68.5				
54"	80.0	80.0	77.2	70.2	64.1						
60"	80.0	74.4	67.7								
66"		66.3									
(1) LONG DIMENSION	60"	66"	72"	78"	84"	90"	96"	108"	120"	132"	144"

TABLE NOTES:

(1) ALL WINDOW DIMENSION VALUES SHOWN ARE +/−1/2" & ARE FRAME (F.H. & F.W.) DIMENSIONS

(2) THOSE SIZES WITH LOADS LISTED ARE MAXIMUM ALLOWABLE SIZES AT THAT LOAD. IF NO LOAD IS LISTED FOR A GIVEN SIZE, THAT SIZE EXCEEDS ALLOWABLE AND IS NOT ACCEPTABLE.

ALLOWABLE DESIGN PRESSURE (WITH CARDINAL 9/16" HEAT STRENGTHENED LAMINATED GLASS)

(1) SHORT DIMENSION	DESIGN LOAD CAPACITY (POSITIVE & NEGATIVE PSF)										
30"	80.0	80.0	80.0	80.0	80.0	80.0	80.0	80.0	80.0	80.0	80.0
36"	80.0	80.0	80.0	80.0	80.0	80.0	80.0	80.0	80.0	80.0	80.0
42"	80.0	80.0	80.0	80.0	80.0	80.0	80.0	80.0	80.0	80.0	
48"	80.0	80.0	80.0	80.0	80.0	80.0	80.0	80.0	80.0		
54"	80.0	80.0	80.0	80.0	80.0						
60"	80.0	80.0	80.0								
66"		72.7									
(1) LONG DIMENSION	60"	66"	72"	78"	84"	90"	96"	108"	120"	132"	144"

APPROVED AS COMPLYING WITH THE
SOUTH FLORIDA BUILDING CODE
DATE January 10, 2002
BY Shaq Chauda
PRODUCT CONTROL DIVISION
BUILDING CODE COMPLIANCE OFFICE
ACCEPTANCE NO. 01-1012.02

DRAWN BY: W.W.S.	CHECKED BY: W.W.S.
PLOT: 1=2	DATE: 06/30/01

NO.	REVISION DESCRIPTION	BY	DATE

DRAWING TITLE
ALUMINUM CLAD WOOD DIRECT GLAZED IMPACT WINDOW

MANUFACTURER
HURD MILLWORK CO., INC.
575 S. WHELEN AVE.
MEDFORD, WI 54451
800-433-4873

CONSULTANTS
W. W. SCHAEFER ENGINEERING & CONSULTING, P.A.
600 SANDTREE DRIVE, SUITE 203B
PALM BEACH GARDENS, FL 33403
PHONE: 561-775-4902 FAX: 561-775-4903

CERTIFICATION
JAN 2 0 2002
WARREN W. SCHAEFER, P.E.
P.E. NO. 44135

DRAWING NO. 1045
REV.

SHEET NO. 4 OF 4