MIAMI-DADE COUNTY, FLORIDA
METRO-DADE FLAGLER BUILDING

BUILDING CODE COMPLIANCE OFFICE
METRO-DADE FLAGLER BUILDING
140 WEST FLAGLER STREET, SUITE 1603
MIAMI, FLORIDA 33130-1563
(305) 375-2901 FAX (305) 375-2908

CONTRACTOR LICENSING SECTION
(305) 375-2527 FAX (305) 375-2558

CONTRACTOR ENFORCEMENT DIVISION
(305) 375-2966 FAX (305) 375-2908

PRODUCT CONTROL DIVISION
(305) 375-2902 FAX (305) 372-6339

PRODUCT CONTROL NOTICE OF ACCEPTANCE

Extech/Exterior Technologies, Inc.
200 Bridge Street
Pittsburgh ,PA 15223

Your application for Notice of Acceptance (NOA) of:
Series 3400 Alumium Fixed Window System
under Chapter 8 of the Code of Miami-Dade County governing the use of Alternate Materials and Types of Construction, and completely described herein, has been recommended for acceptance by the Miami-Dade County Building Code Compliance Office (BCCO) under the conditions specified herein.

This NOA shall not be valid after the expiration date stated below. BCCO reserves the right to secure this product or material at any time from a jobsite or manufacturer's plant for quality control testing. If this product or material fails to perform in the approved manner, BCCO may revoke, modify, or suspend the use of such product or material immediately. BCCO reserves the right to revoke this approval, if it is determined by BCCO that this product or material fails to meet the requirements of the South Florida Building Code.

The expense of such testing will be incurred by the manufacturer.

ACCEPTANCE NO.: 01-1016.06
EXPIRES: 12/31/2006

Raul Rodriguez
Chief Product Control Division

THIS IS THE COVERSHEET, SEE ADDITIONAL PAGES FOR SPECIFIC AND GENERAL CONDITIONS
BUILDING CODE & PRODUCT REVIEW COMMITTEE

This application for Product Approval has been reviewed by the BCCO and approved by the Building Code and Product Review Committee to be used in Miami-Dade County, Florida under the conditions set forth above.

Francisco J. Quintana, R.A.
Director
Miami-Dade County
Building Code Compliance Office

APPROVED: 12/06/2001

NOTICE OF ACCEPTANCE: SPECIFIC CONDITIONS

1. SCOPE

1.1 This **renews** Notice of Acceptance (NOA) No. **98-1201.03**, which was issued on November 05, 1998. It renews the approval of an aluminum fixed window, as described in Section 2 of this NOA, designed to comply with the South Florida Building Code (SFBC), 1994 Edition for Miami-Dade County, for the locations where the pressure requirements, as determined by SFBC Chapter 23, do not exceed the Design Pressure Rating values indicated in the approved drawings.

2. PRODUCT DESCRIPTION

2.1 The **Series "3400" Aluminum Fixed Window** and its components shall be constructed in strict compliance with the following document: Drawing No **3400R**, Sheets 1 through 3 of 3, titled "Series: 3400 Window Systems," prepared by Engineering Analytics, Inc., dated 11/16/98, bearing the Miami-Dade County Product Control renewal stamp with the NOA number and expiration date by the Miami-Dade County Product Control Division. This document shall hereinafter be referred to as the approved drawings.

3. LIMITATIONS

3.1 This approval applies to single unit applications and multiple lites applications, as long as panel size does not exceed the one tested and intermediate mullions are used between all panels, as shown in the approved drawings.

3.2 Units with dimensions smaller than those shown in Section 1.3 shall also qualify under this approval.

4. INSTALLATION

4.1 The aluminum fixed window and its components shall be installed in strict compliance with the approved drawings.

4.2 The installation of this product **will not** require a hurricane protection system.

5. LABELING

5.1 Each unit shall bear a permanent label with the manufacturer's name or logo, city, state and following statement: "Miami-Dade County Product Control Approved".

6. BUILDING PERMIT REQUIREMENTS

6.1 Application for building permit shall be accompanied by copies of the following:

6.1.1 This Notice of Acceptance

6.1.2 Duplicate copies of the approved drawings, as identified in Section 2 of this Notice of Acceptance, clearly marked to show the components selected for the proposed installation.

6.1.3 Any other documents required by the Building Official or the South Florida Building Code (SFBC) in order to properly evaluate the installation of this system.

Raul Rodriguez, Chief
Product Control Division

NOTICE OF ACCEPTANCE: STANDARD CONDITIONS

1. Renewal of this Acceptance (approval) shall be considered after a renewal application has been filed and the original submitted documentation, including test supporting data, engineering documents, are no older than eight (8) years.

2. Any and all approved products shall be permanently labeled with the manufacturer's name, city, state, and the following statement: "Miami-Dade County Product Control Approved", or as specifically stated in the specific conditions of this Acceptance.

3. Renewals of Acceptance will not be considered if:
   a) There has been a change in the South Florida Building Code affecting the evaluation of this product and the product is not in compliance with the code changes;
   b) The product is no longer the same product (identical) as the one originally approved;
   c) If the Acceptance holder has not complied with all the requirements of this acceptance, including the correct installation of the product;
   d) The engineer who originally prepared, signed and sealed the required documentation initially submitted is no longer practicing the engineering profession.

4. Any revision or change in the materials, use, and/or manufacture of the product or process shall automatically be cause for termination of this Acceptance, unless prior written approval has been requested (through the filing of a revision application with appropriate fee) and granted by this office.

5. Any of the following shall also be grounds for removal of this Acceptance:
   a) Unsatisfactory performance of this product or process.
   b) Misuse of this Acceptance as an endorsement of any product, for sales, advertising or any other purpose.

6. The Notice of Acceptance number preceded by the words Miami-Dade County, Florida, and followed by the expiration date may be displayed in advertising literature. If any portion of the Notice of Acceptance is displayed, then it shall be done in its entirety.

7. A copy of this Acceptance as well as approved drawings and other documents, where it applies, shall be provided to the user by the manufacturer or its distributors and shall be available for inspection at the job site at all time. The engineer need not reseal the copies.

8. Failure to comply with any section of this Acceptance shall be cause for termination and removal of Acceptance.

9. This Notice of Acceptance consists of pages 1, 2 and this last page 3.

END OF THIS ACCEPTANCE

Raul Rodriguez, Chief
Product Control Division

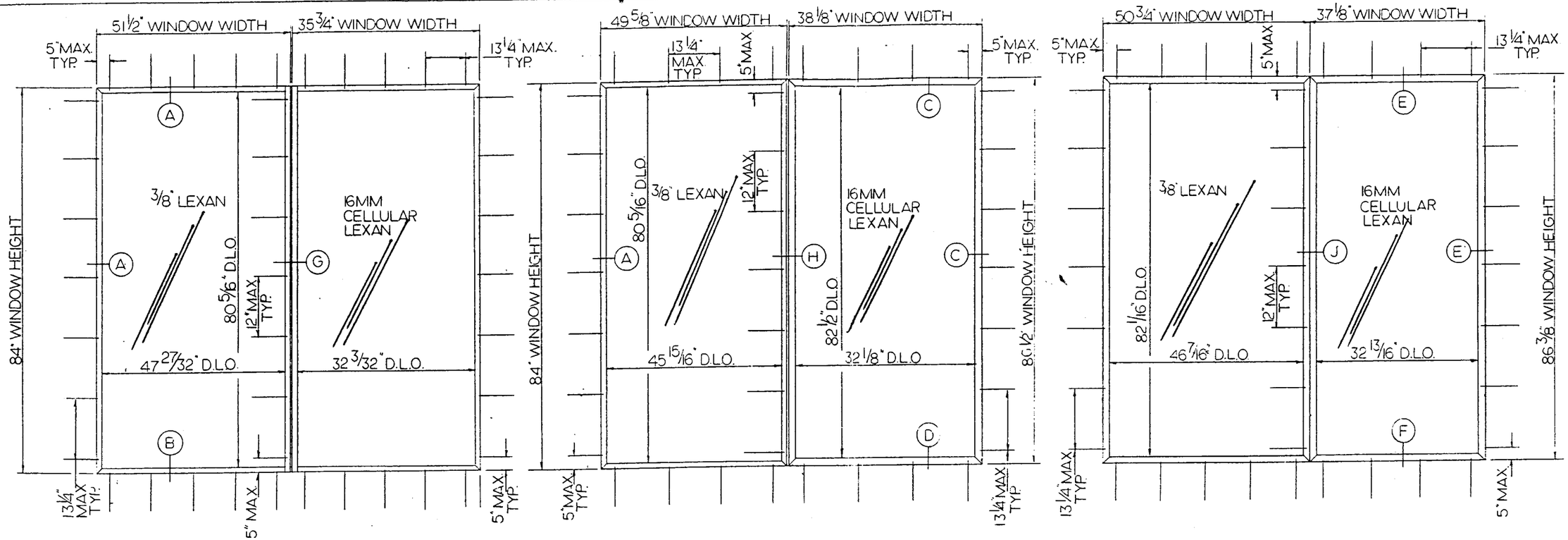

TYPICAL ELEVATIONS
TESTED UNITS

DESIGN PRESSURE RATING: +100 PSF / -100 PSF

NOTES:

1. THIS STRUCTURE IS DESIGNED AS PER THE SOUTH FLORIDA BUILDING CODE 1994 EDITION FOR DADE COUNTY. ALSO FOR WIND LOADS AS PER ASCE 7-88 USING CORRESPONDING LOADS.
2. WOOD BUCKS BY OTHERS, MUST BE ANCHORED PROPERLY TO TRANSFER LOADS TO THE STRUCTURE.
3. ANCHORS SHALL BE LISTED, SPACED AS SHOWN ON DETAILS. ANCHOR EMBEDMENT TO BASE MATERIAL SHALL BE BEYOND WALL DRESSING OR STUCCO.
4. WINDOW CAN BE USED AS A PRIMARY UNIT, AS WELL AS AN OVERGLAZING OR INNERGLAZING.

IMPACT RESISTANT WINDOWS
SHUTTERS NOT REQUIRED

PRODUCT RENEWED
ACCEPTANCE No. 01-1016.06
EXPIRATION DATE December 31, 2006
By
PRODUCT CONTROL DIVISION
BUILDING CODE COMPLIANCE OFFICE

APPROVED AS COMPLYING WITH THE SOUTH FLORIDA BUILDING CODE
DATE February 11, 1999
BY Manuel Diaz
PRODUCT CONTROL DIVISION
BUILDING CODE COMPLIANCE OFFICE
ACCEPTANCE NO. 98-1201.03

REVISIONS: DATE

SERIES 3400
WINDOW SYSTEMS

ENGINEERING ANALYTICS, INC.
2455 S.W. 27 AVENUE
SUITE 230
MIAMI, FLORIDA 33145
(305) 285-9543

EXTECH
EXTERIOR TECHNOLOGIES, INC.
200 BRIDGE STREET
PITTSBURGH, PA. 15223
PHONE (412) 781-0991 FAX (412) 781-5303

DRAWN ADL
CHECKED WPV
DATE 11/16/98
SCALE 1"=1'
JOB NO 3400R
SHEET 1 OF 3 SHEET

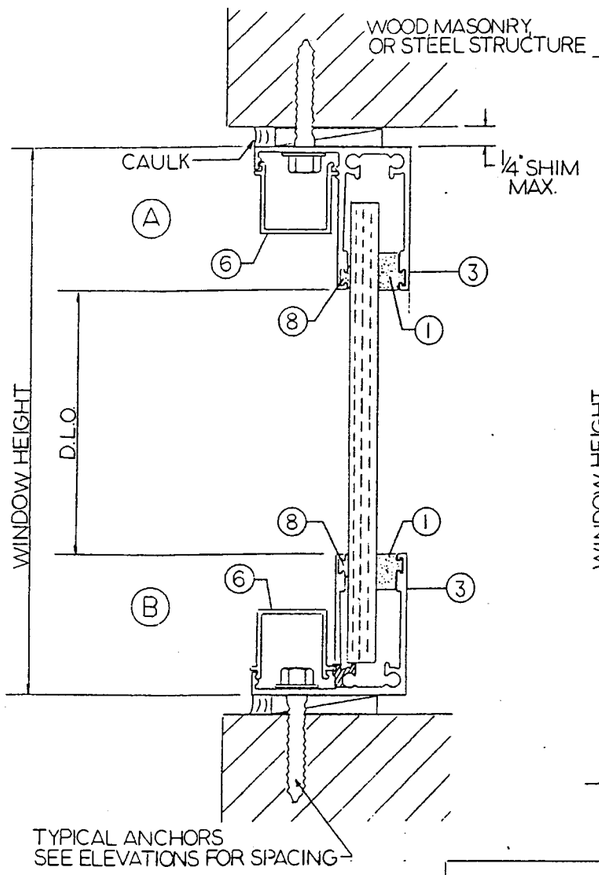

SERIES 3400B

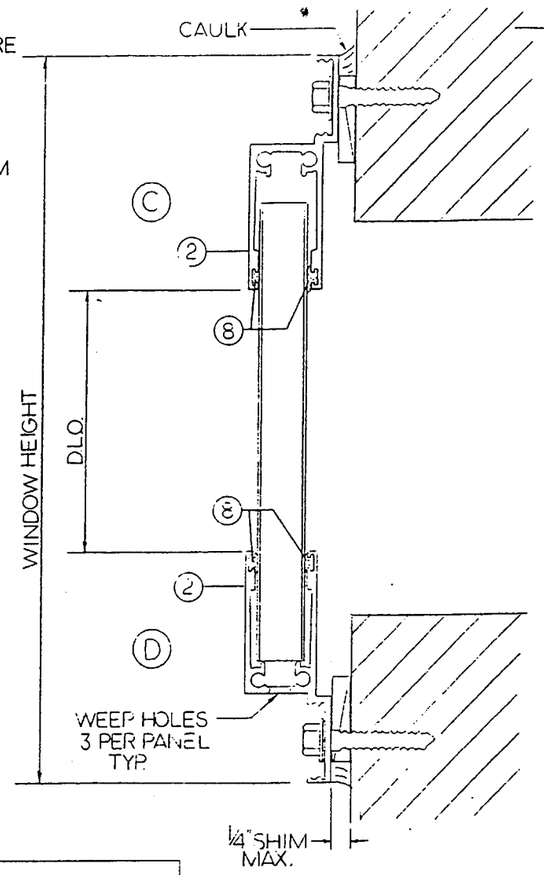

SERIES 3400A

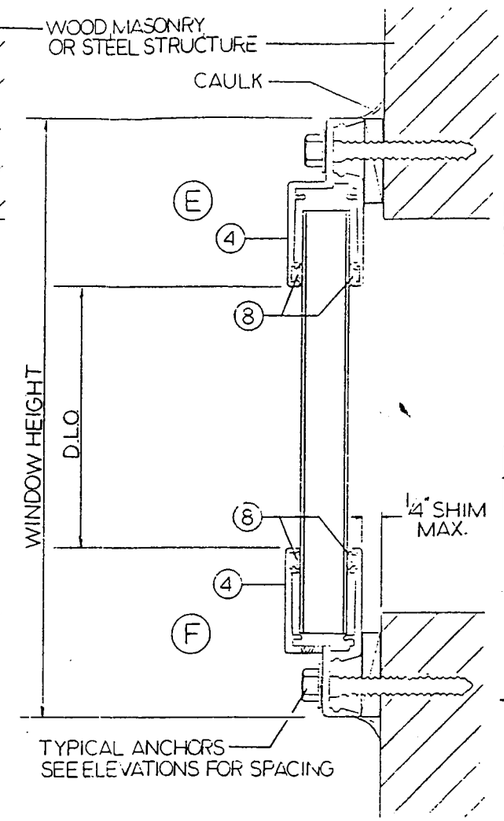

SERIES 3400N

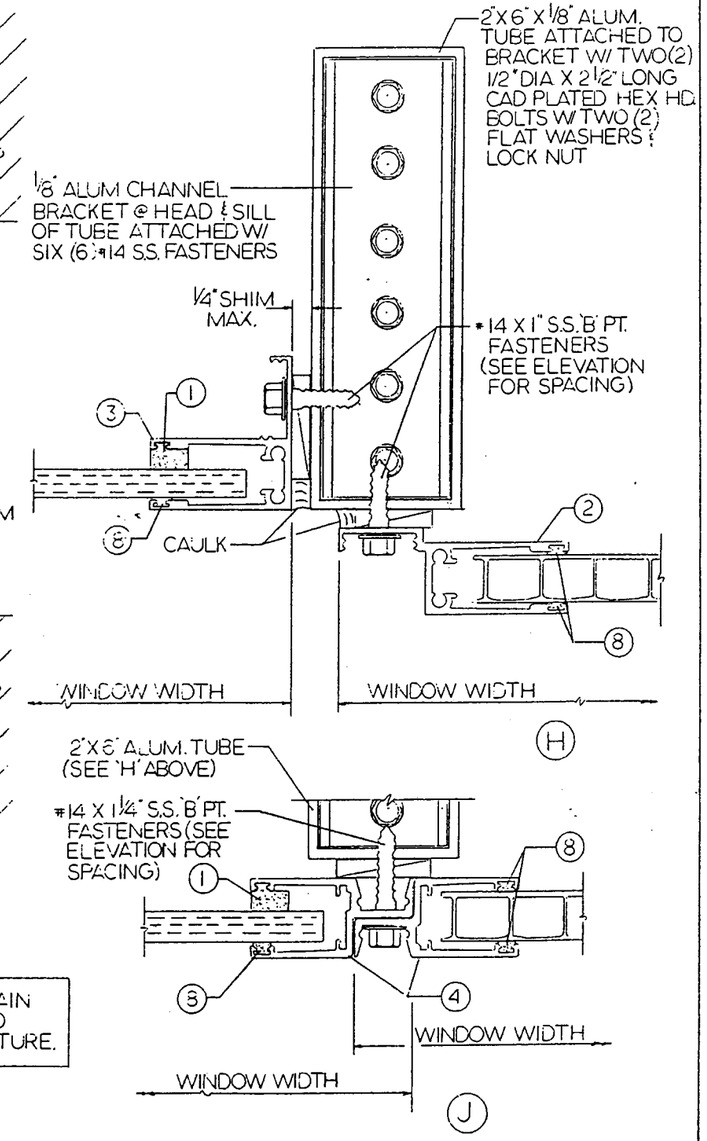

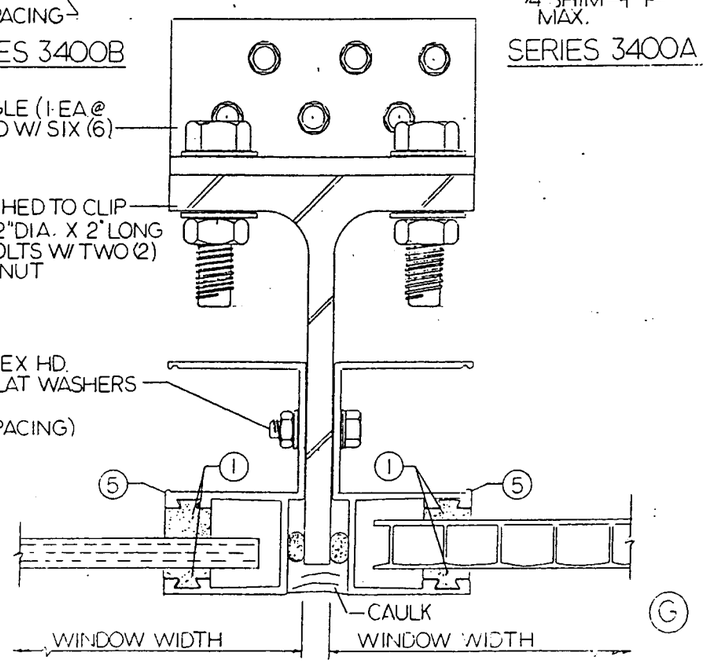

WOOD BUCKS NOT BY EXTECH, MUST SUSTAIN LOADS IMPOSED BY GLAZING SYSTEM AND TRANSFER THEM TO THE BUILDING STRUCTURE.

TYPICAL ANCHORS SEE ELEVATIONS FOR SPACING

INTO 2X WOOD BUCKS OR WOOD STRUCTURE
#14 S.S. SMS WITH 1 1/2" MIN EMBED INTO WOOD

THRU 1X WOOD BUCKS INTO MASONRY OR DIRECTLY INTO MASONRY
1/4" ITW TAPCONS WITH 1 1/4" MIN EMBED INTO MASONRY

INTO STEEL OR METAL STRUCTURES (1/8" MIN. THICKNESS)
#14 S.S. SMS OR TEK SCREWS

GLAZING BITE: 1" MIN. TYPICAL

APPROVED AS COMPLYING WITH THE SOUTH FLORIDA BUILDING CODE
DATE February 11 1999
PRODUCT CONTROL DIVISION
BUILDING CODE COMPLIANCE OFFICE
ACCEPTANCE NO. 98-1201.03

PRODUCT RENEWED
ACCEPTANCE No. 01-1016.06
EXPIRATION DATE December 31, 2001
By
PRODUCT CONTROL DIVISION
BUILDING CODE COMPLIANCE OFFICE

REVISIONS	DATE

SERIES 3400 WINDOW SYSTEMS

ENGINEERING ANALYTICS, INC.
2455 S.W. 27 AVENUE
SUITE 230
MIAMI, FLORIDA
(305) 285-9543

EXTECH
EXTERIOR TECHNOLOGIES, INC.
200 BRIDGE STREET
PITTSBURGH, PA. 15223
PHONE (412) 781-0391 FAX (412) 781-9303

DRAWN	ADL
CHECKED	WPV
DATE	11/15/98
SCALE	1"=1"
JOB NO.	3400R
SHEET	2 OF 3 SHEETS

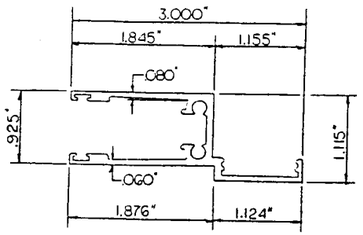

FRAME 3400A SERIES

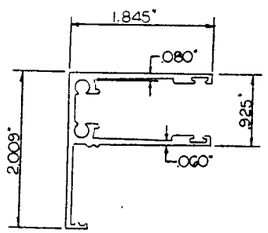

FRAME 3400B SERIES

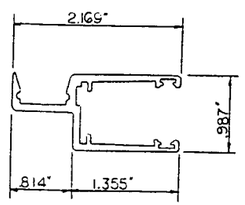

FRAME 3400N SERIES

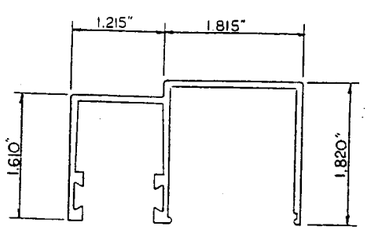

HALF MULLION

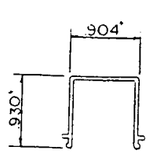

SNAP-IN COVER

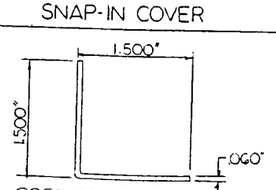

CORNER KEY-3400N SERIES

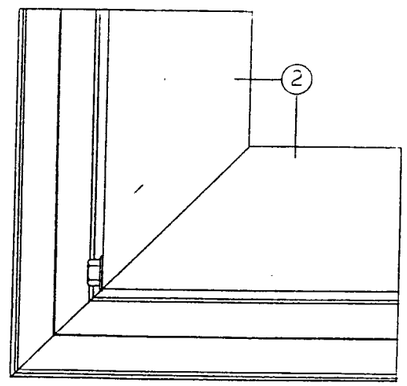

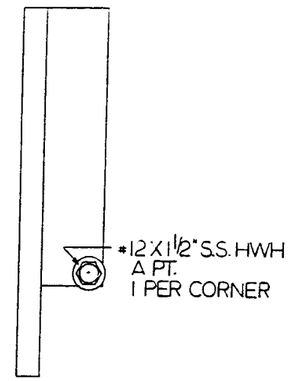

CORNER ASSEMBLY
SERIES 3400A

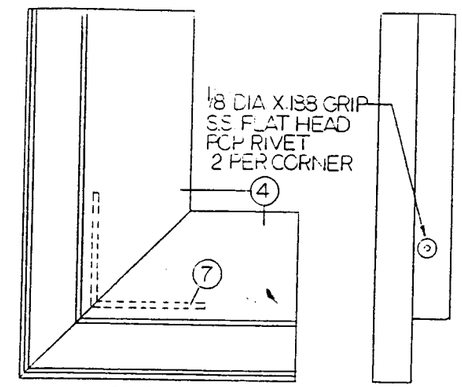

CORNER ASSEMBLY
SERIES 3400N

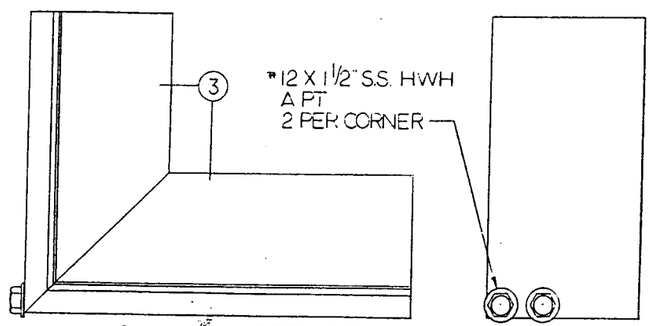

CORNER ASSEMBLY
SERIES 3400B

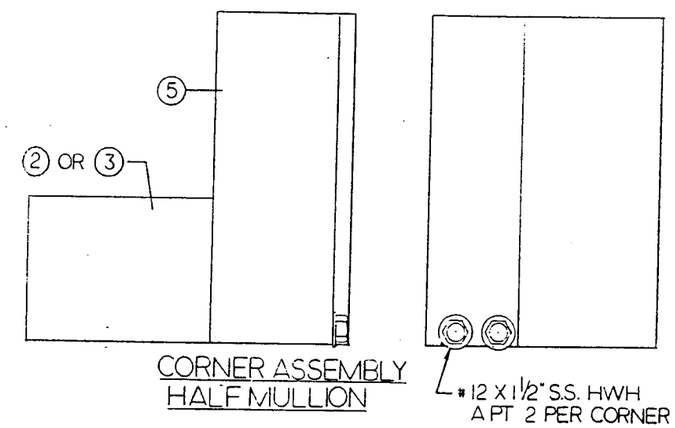

CORNER ASSEMBLY
HALF MULLION

ITEM	PART #	REQ'D	DESCRIPTION	MATERIAL	MANF/SUPPLIER/REMARKS
1	GAS-2	1 ROW	GASKET WEATHERSEAL	—	MONTVILLE
2	S-17298	4	FRAME FOR 3400A	6063-T5	KEYMARK
3	S-17340	4	FRAME FOR 3400B	6063-T5	KEYMARK
4	SX-4899	4	FRAME FOR 3400N	6063-T5	STAR EXTRUDED SHAPES
5	S-17342	2	HALF MULLION	6063-T5	KEYMARK
6	S-17320	4	SNAP-IN COVER	6063-T5	KEYMARK
7	CK-1	1/CORNER	CORNER KEY 3400N SERIES	5005-H16	COPFER SALES
8	Q150 X 190	1/2 ROWS	GASKET WEATHERSEAL	—	SCHLEGEL CORP

PRODUCT RENEWED
ACCEPTANCE No. 01-1016.06
EXPIRATION DATE December 31, 2006
By
PRODUCT CONTROL DIVISION
BUILDING CODE COMPLIANCE OFFICE

APPROVED AS COMPLYING WITH THE SOUTH FLORIDA BUILDING CODE
DATE February 11, 1999
BY
PRODUCT CONTROL DIVISION
BUILDING CODE COMPLIANCE OFFICE
ACCEPTANCE NO. 98-1201.03

REVISIONS	DATE

SERIES 3400
WINDOW SYSTEMS

ENGINEERING ANALYTICS, INC.
2455 S.W. 27 AVENUE
SUITE 230
MIAMI, FLORIDA 33145
(305) 285-9543

EXTECH
EXTERIOR TECHNOLOGIES, INC.
200 BRIDGE STREET
PITTSBURGH, PA 15223
PHONE (412) 781-0701 FAX (412) 781-9303

DRAWN	ADL
CHECKED	WPV
DATE	11/16/98
SCALE	1"=1"
JOB NO	3400P
SHEET	3 OF 3 SHEET