MIAMI-DADE

MIAMI-DADE COUNTY, FLORIDA
METRO-DADE FLAGLER BUILDING

BUILDING CODE COMPLIANCE OFFICE
METRO-DADE FLAGLER BUILDING
140 WEST FLAGLER STREET, SUITE 1603
MIAMI, FLORIDA 33130-1563
(305) 375-2901 FAX (305) 375-2908

CONTRACTOR LICENSING SECTION
(305) 375-2527 FAX (305) 375-2558

CONTRACTOR ENFORCEMENT DIVISION
(305) 375-2966 FAX (305) 375-2908

PRODUCT CONTROL DIVISION
(305) 375-2902 FAX (305) 372-6339

PRODUCT CONTROL NOTICE OF ACCEPTANCE

Andersen Corporation
100 Fourth Avenue North
Bayport ,MN 55003-1096

Your application for Notice of Acceptance (NOA) of:
Narroline TR Series Wood Fixed Window
under Chapter 8 of the Code of Miami-Dade County governing the use of Alternate Materials and Types of Construction, and completely described herein, has been recommended for acceptance by the Miami-Dade County Building Code Compliance Office (BCCO) under the conditions specified herein.

This NOA shall not be valid after the expiration date stated below. BCCO reserves the right to secure this product or material at any time from a jobsite or manufacturer's plant for quality control testing. If this product or material fails to perform in the approved manner, BCCO may revoke, modify, or suspend the use of such product or material immediately. BCCO reserves the right to revoke this approval, if it is determined by BCCO that this product or material fails to meet the requirements of the South Florida Building Code.

The expense of such testing will be incurred by the manufacturer.

ACCEPTANCE NO.: 01-1018.01
EXPIRES: 11/05/2006

Raul Rodriguez
Chief Product Control Division

THIS IS THE COVERSHEET, SEE ADDITIONAL PAGES FOR SPECIFIC AND GENERAL CONDITIONS
BUILDING CODE & PRODUCT REVIEW COMMITTEE

This application for Product Approval has been reviewed by the BCCO and approved by the Building Code and Product Review Committee to be used in Miami-Dade County, Florida under the conditions set forth above.

Francisco J. Quintana, R.A.
Director
Miami-Dade County
Building Code Compliance Office

APPROVED: 11/21/2001

NOTICE OF ACCEPTANCE: SPECIFIC CONDITIONS

1. SCOPE

1.1 This **renews** Notice of Acceptance (NOA) No. **98-0304.02**, which was issued on November 05, 1998. It renews the approval of a wood fixed window, as described in Section 2 of this NOA, designed to comply with the South Florida Building Code (SFBC), 1994 Edition for Miami-Dade County, for the locations where the pressure requirements, as determined by SFBC Chapter 23, do not exceed the Design Pressure Rating values indicated in the approved drawings.

2. PRODUCT DESCRIPTION

2.1 The **Series "Narroline TR" PVC Clad Wood Fixed Window** and its components shall be constructed in strict compliance with the following document: Drawing No **DADE-20226**, Sheets 1 through 3 of 3, titled "Unit Assembly. PSNL Transom," prepared by manufacturer, dated 2/29/98, signed and sealed by Richard Boyette, PE., bearing the Miami-Dade County Product Control renewal stamp with the NOA number and expiration date by the Miami-Dade County Product Control Division. This document shall hereinafter be referred to as the approved drawings.

3. LIMITATIONS

3.1 This approval applies to single unit applications of a wood fixed window, as shown approved drawings.

4. INSTALLATION

4.1 The wood fixed window and its components shall be installed in strict compliance with the approved drawings.

4.2 Hurricane protection system (shutters): the installation of this unit **will require** a hurricane protection system.

5. LABELING

5.1 Each unit shall bear a permanent label with the manufacturer's name or logo, city, state and following statement: "Miami-Dade County Product Control Approved".

6. BUILDING PERMIT REQUIREMENTS

6.1 Application for building permit shall be accompanied by copies of the following:

6.1.1 This Notice of Acceptance

6.1.2 Duplicate copies of the approved drawings, as identified in Section 2 of this Notice of Acceptance, clearly marked to show the components selected for the proposed installation.

6.1.3 Any other documents required by the Building Official or the South Florida Building Code (SFBC) in order to properly evaluate the installation of this system.

Raul Rodriguez, Chief
Product Control Division

Anderson Corporation

ACCEPTANCE No.: **01-1018.01**

APPROVED: **November 22, 2001**

EXPIRES: **November 5, 2006**

NOTICE OF ACCEPTANCE: STANDARD CONDITIONS

1. Renewal of this Acceptance (approval) shall be considered after a renewal application has been filed and the original submitted documentation, including test supporting data, engineering documents, are no older than eight (8) years.

2. Any and all approved products shall be permanently labeled with the manufacturer's name, city, state, and the following statement: "Miami-Dade County Product Control Approved", or as specifically stated in the specific conditions of this Acceptance.

3. Renewals of Acceptance will not be considered if:
   a) There has been a change in the South Florida Building Code affecting the evaluation of this product and the product is not in compliance with the code changes;
   b) The product is no longer the same product (identical) as the one originally approved;
   c) If the Acceptance holder has not complied with all the requirements of this acceptance, including the correct installation of the product;
   d) The engineer who originally prepared, signed and sealed the required documentation initially submitted is no longer practicing the engineering profession.

4. Any revision or change in the materials, use, and/or manufacture of the product or process shall automatically be cause for termination of this Acceptance, unless prior written approval has been requested (through the filing of a revision application with appropriate fee) and granted by this office.

5. Any of the following shall also be grounds for removal of this Acceptance:
   a) Unsatisfactory performance of this product or process.
   b) Misuse of this Acceptance as an endorsement of any product, for sales, advertising or any other purpose.

6. The Notice of Acceptance number preceded by the words Miami-Dade County, Florida, and followed by the expiration date may be displayed in advertising literature. If any portion of the Notice of Acceptance is displayed, then it shall be done in its entirety.

7. A copy of this Acceptance as well as approved drawings and other documents, where it applies, shall be provided to the user by the manufacturer or its distributors and shall be available for inspection at the job site at all time. The engineer need not reseal the copies.

8. Failure to comply with any section of this Acceptance shall be cause for termination and removal of Acceptance.

9. This Notice of Acceptance consists of pages 1, 2 and this last page 3.

END OF THIS ACCEPTANCE

Raul Rodriguez, Chief
Product Control Division

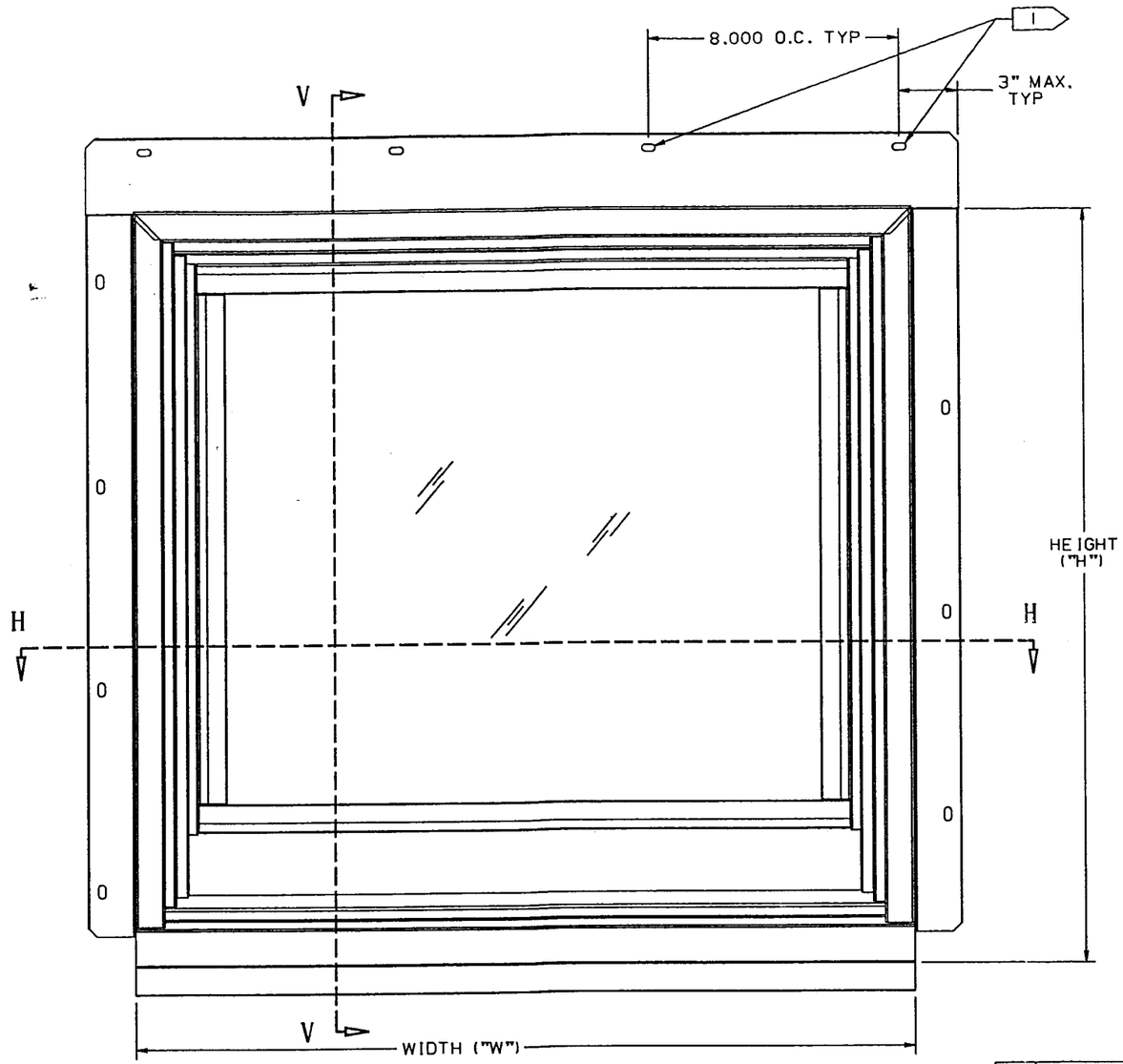

WINDOW	"W"	"H"	# OF NAILS PER HEAD/SILL	# OF SCREWS PER HEAD/SILL	# OF NAILS PER JAMB PAIR	# OF SCREWS PER JAMB PAIR
TR3832	45.625	41.250	12	4	10	8
TR3432	41.625	41.250	10	4	10	8
TR3032	37.625	41.250	10	4	10	8
TR2832	33.625	41.250	8	3	10	8
TR2432	29.625	41.250	8	3	10	8
TR2032	25.625	41.250	8	3	10	8
TR1832	21.625	41.250	6	2	10	8
TR3828	45.625	35.250	12	4	10	6
TR3428	41.625	35.250	10	4	10	6
TR3028	37.625	35.250	10	4	10	6
TR2828	33.625	35.250	8	3	10	6
TR2428	29.625	35.250	8	3	10	6
TR2028	25.625	35.250	8	3	10	6
TR1828	21.625	35.250	6	2	10	6
TR3824	45.625	31.250	12	4	8	6
TR3424	41.625	31.250	10	4	8	6
TR3024	37.625	31.250	10	4	8	6
TR2824	33.625	31.250	8	3	8	6
TR2424	29.625	31.250	8	3	8	6
TR2024	25.625	31.250	8	3	8	6
TR1824	21.625	31.250	6	2	8	6
TR3822	45.625	29.250	12	4	8	6
TR3422	41.625	29.250	10	4	8	6
TR3022	37.625	29.250	10	4	8	6
TR2822	33.625	29.250	8	3	8	6
TR2422	29.625	29.250	8	3	8	6
TR2022	25.625	29.250	8	3	8	6
TR1822	21.625	29.250	6	2	8	6
TR3820	45.625	27.250	12	4	8	6
TR3420	41.625	27.250	10	4	8	6
TR3020	37.625	27.250	10	4	8	6
TR2820	33.625	27.250	8	3	8	6
TR2420	29.625	27.250	8	3	8	6
TR2020	25.625	27.250	8	3	8	6
TR1820	21.625	27.250	6	2	8	6
TR3818	45.625	23.250	12	4	6	4
TR3418	41.625	23.250	10	4	6	4
TR3018	37.625	23.250	10	4	6	4
TR2818	33.625	23.250	8	3	6	4
TR2418	29.625	23.250	8	3	6	4
TR2018	25.625	23.250	8	3	6	4
TR1818	21.625	23.250	6	2	6	4
TR3816	45.625	21.250	12	4	6	4
TR3416	41.625	21.250	10	4	6	4
TR3016	37.625	21.250	10	4	6	4
TR2816	33.625	21.250	8	3	6	4
TR2416	29.625	21.250	8	3	6	4
TR2016	25.625	21.250	8	3	6	4
TR1816	21.625	21.250	6	2	6	4
TR3410	41.625	15.250	10	4	4	4
TR3010	37.625	15.250	10	4	4	4
TR2810	33.625	15.250	8	3	4	4
TR2410	29.625	15.250	8	3	4	4

APPROVED AS COMPLYING WITH THE SOUTH FLORIDA BUILDING CODE
DATE November 05 19 98
BY Manuel Sing
PRODUCT CONTROL DIVISION
BUILDING CODE COMPLIANCE OFFICE
ACCEPTANCE NO. 98-0304-02

PRODUCT RENEWED

ACCEPTANCE No. 01-1018.01
EXPIRATION DATE November 5, 2006
By
PRODUCT CONTROL DIVISION
BUILDING CODE COMPLIANCE OFFICE

Rubel Batty 10/6/98
97-1212

NOTES:

1. INSTALLATION METHODS/FASTENER LOCATIONS:
OPTION #1: NAILS ARE EVENLY SPACED APPROXIMATELY 8" ON CENTER AROUND THE PERIMETER OF THE UNIT THROUGH THE FLANGES.
OPTION #2: SCREWS ARE EVENLY SPACED APPROXIMATELY 12" ON CENTER AROUND THE PERIMETER OF THE UNIT EXCEPT FOR THE SILL THROUGH THE JAMBS.

[redacted]

3. GLAZING SPECIFICATIONS: TWO TYPES OF CONSTRUCTION WILL BE AVAILABLE. STANDARD GLASS AS OPTION ONE AND OPTION TWO WILL BE USED IN CONDITIONS WHERE STANDARD GLASS DOES NOT MEET THE REQUIRED DESIGN PRESSURE LEVELS PER TABLE 35E.

OPTION ONE: 5/8" INSULATED SINGLE STRENGTH GLASS (2.3 MM THICK HEAT STRENGTHENED INNER LITE, 2.2 MM THICK HIGH PERFORMANCE OUTER LITE, AND DESICCANT FILLED SPACER SYSTEM).

OPTION TWO: 5/8" INSULATED DOUBLE STRENGTH GLASS GLASS (3.1 MM THICK TEMPERED INNER AND OUTER LITES WITH A DESICCANT FILLED SPACER SYSTEM).

METHOD- GLASS IS SET FROM THE INTERIOR WITH SILICONE BACKBEDDING. AN INTERLOCKING DUROMETER VINYL GLAZING BEAD IS USED ON THE EXTERIOR.

4. HURRICANE SHUTTER PROTECTION IS REQUIRED.

QTY.	DESCRIPTION	LOCATION
BEAD	ADHESIVE	ATTACHMENT OF SIDE & HEAD OFMS TO JAMBS
BEAD	SILICONE	SEAL BETWEEN SILL & PREFINISHED SILL STOP
BEAD	SILICONE	SEAL BETWEEN SILL & SIDE STOPS
BEAD	SILICONE	SEAL BETWEEN SILL & SIDE JAMBS
BEAD	SILICONE	SEAL BETWEEN HEAD & SIDE OFMS
BEAD	SILICONE	SEAL BETWEEN SIDE OFMS & SILL
3-6	NAIL, .072 X 1-1/2	ATTACHMENT OF SILL STOP TO SILL
3-6	NAIL, .072 X 1	ATTACHMENT OF PREFINISHED SILL STOP TO SILL
3-6	NAIL, .072 X 1	ATTACHMENT OF FILLER STOP TO BOTTOM RAIL
3-6	NAIL, .072 X 1	ATTACHMENT OF HEAD STOP TO HEAD JAMB
6-10	NAIL, .072 X 1	ATTACHMENT OF SIDE STOP TO SIDE JAMB
2	TEDLAR TAPE	JOINTS AT HEAD & SIDE OFMS
2	SCREW, 8 X 2-1/4, FL. HD	ATTACHMENT OF SILL TO SIDE OFMS
2	SCREW, 8 X 1-3/4, FL. HD	ATTACHMENT OF HEAD OFM TO SIDE OFMS
8	NAIL, .113 X 2-3/8	ATTACHMENT OF HEAD JAMB TO SIDE JAMBS
4	SCREW, 8 X 1-1/2, FL. HD	ATTACHMENT OF SIDE JAMB TO SILL

FASTENERS LIST

TITLE UNIT ASSEMBLY. PSNL TRANSOM

Andersen Corporation
Bayport, Minnesota 55003

THESE DRAWINGS AND SPECIFICATIONS ARE SERVED BY ANDERSEN CORPORATION FOR THE USE OF ITS CUSTOMERS AND ARE THE PROPERTY OF ANDERSEN CORPORATION. ACCEPTANCE OF THESE SPECIFICATIONS, DRAWINGS AND FOR THE ACTUAL INSTALLATION INDICATED BY THESE DRAWINGS LIES WITH THE ARCHITECT, ENGINEER AND/OR CONTRACTOR.
COPYRIGHT ANDERSEN CORPORATION 1995. ALL RIGHTS RESERVED.

APPROVE/DATE CWC 2/29/98
DRAWING NUMBER DADE-20226
SHT. 1 OF 3

SECTION H-H

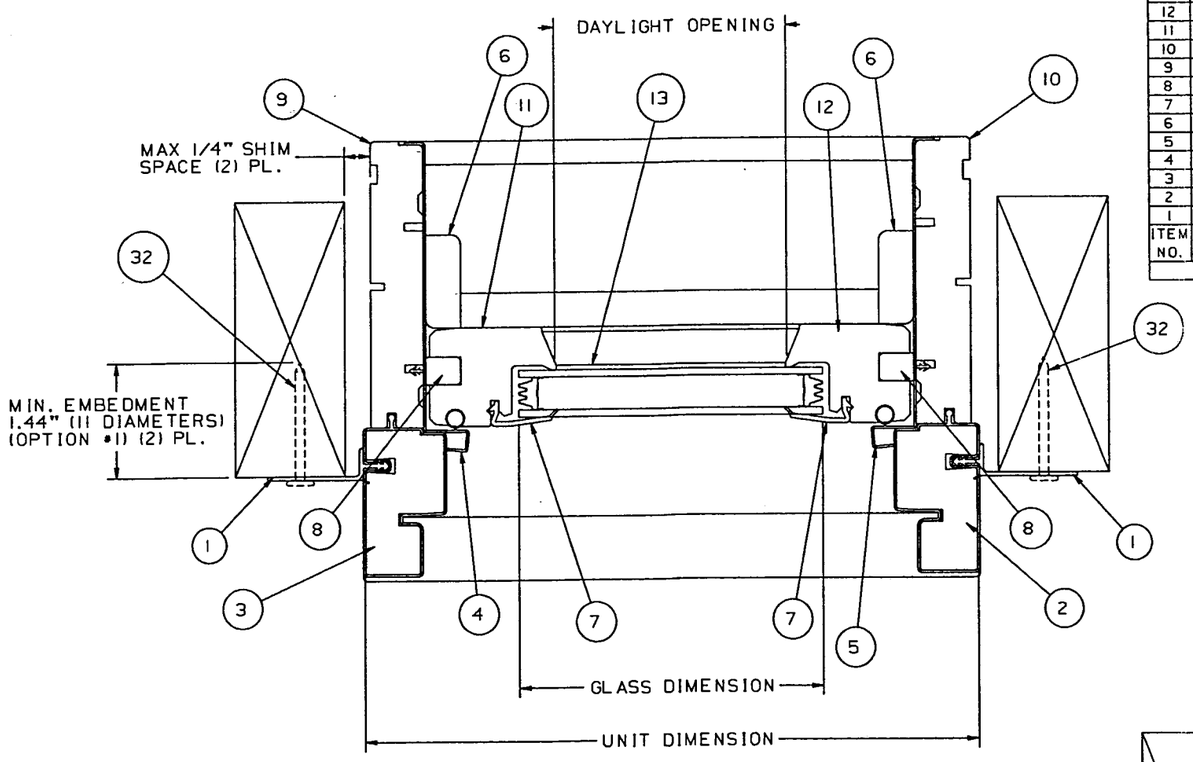

ITEM NO.	DESCRIPTION	DRAWING	MATERIAL	HEIGHT	WIDTH
33	SCREWS, #10 X 2.500"	XXXXX	STEEL	XXXXX	XXXXX
32	NAILS, INSTALLATION, 1-5/8"	XXXXX	GALVANIZED	XXXXX	XXXXX
31	GLASS	XXXXX	XXXXX	XXXXX	XXXXX
30	RAIL, BOTTOM	25092	WOOD	1.328	2.562
29	LINER, RAIL	20150	VINYL	XXXXX	.744
28	BEAD, 5/8 WHITE, UPR CHK/BTM RAIL	20153	VINYL	.335	.859
27	BEAD, 5/8 WHITE, TOP RAIL & STILE	20151	VINYL	.890	.344
26	LINER, HEAD JAMB	20132	VINYL	.546	4.349
25	JAMB, TOP HEAD MEMBER	20162	WOOD	3.812	.375
24	JAMB, HEAD	20129	WOOD	.719	3.844
23	OUTER FRAME MEMBER, HEAD	20027	VINYL/WOOD	2.000	1.125
22	SILL	20023	VINYL/WOOD	1.375	6.403
21	FILLER, SILL	20221	WOOD	.469	1.469
20	STOP, SILL	20116	WOOD	1.719	.996
19	RAIL, TOP	25090	WOOD	1.328	1.578
18	STOP, HEAD	20114	WOOD	.469	1.469
17	STOP, SILL	20046	WOOD	.484	.500
16	WINDBREAK, SILL	20025	PVC	1.312	.469
15	FLANGE, NAILING, HEAD	20031	PVC	2.344	.671
14	WEATHERSTRIP, RAIL	20057	FOAM	.375	.375
13	GLASS	XXXXX	XXXXX	XXXXX	XXXXX
12	STILE, UPPER RH	25056	WOOD	1.328	1.688
11	STILE, UPPER LH	25055	WOOD	1.328	1.688
10	JAMB, SIDE RH	20018	WOOD	.719	3.844
9	JAMB, SIDE LH	20188	WOOD	.719	3.844
8	WEATHERSTRIP, TRANSOM	20228	FOAM	.500	.375
7	BEAD, 5/8 WHITE, TOP RAIL & STILE	20151	VINYL	.890	.344
6	STOP, SIDE	20115	WOOD	.469	1.250
5	LINER, SIDE JAMB, RH	20140	VINYL	.610	4.188
4	LINER, SIDE JAMB, LH	20249	VINYL	.610	4.188
3	OUTER FRAME MEMBER SIDE, LH	20238	VINYL/WOOD	1.125	2.000
2	OUTER FRAME MEMBER SIDE, RH	20237	VINYL/WOOD	1.125	2.000
1	FLANGE, NAILING, SIDE	20032	PVC	1.644	.430

DRAWING REFERENCE LIST

CALL #	GLASS DIMENSION	DAYLIGHT DIMENSION	UNIT WIDTH
TR3832	41.438	40.438	45.625
TR3828	41.438	40.438	45.625
TR3824	41.438	40.438	45.625
TR3822	41.438	40.438	45.625
TR3820	41.438	40.438	45.625
TR3818	41.438	40.438	45.625
TR3816	41.438	40.438	45.625
TR3432	37.438	36.438	41.625
TR3428	37.438	36.438	41.625
TR3424	37.438	36.438	41.625
TR3422	37.438	36.438	41.625
TR3420	37.438	36.438	41.625
TR3418	37.438	36.438	41.625
TR3416	37.438	36.438	41.625
TR3410	37.438	36.438	41.625
TR3032	33.438	32.438	37.625
TR3028	33.438	32.438	37.625
TR3024	33.438	32.438	37.625
TR3022	33.438	32.438	37.625
TR3020	33.438	32.438	37.625
TR3018	33.438	32.438	37.625
TR3016	33.438	32.438	37.625
TR3010	33.438	32.438	37.625
TR2832	29.438	28.438	33.625
TR2828	29.438	28.438	33.625
TR2824	29.438	28.438	33.625
TR2822	29.438	28.438	33.625
TR2820	29.438	28.438	33.625
TR2818	29.438	28.438	33.625
TR2816	29.438	28.438	33.625
TR2810	29.438	28.438	33.625
TR2432	25.438	24.438	29.625
TR2428	25.438	24.438	29.625
TR2424	25.438	24.438	29.625
TR2422	25.438	24.438	29.625
TR2420	25.438	24.438	29.625
TR2418	25.438	24.438	29.625
TR2416	25.438	24.438	29.625
TR2410	25.438	24.438	29.625
TR2032	21.438	20.438	25.625
TR2028	21.438	20.438	25.625
TR2024	21.438	20.438	25.625
TR2022	21.438	20.438	25.625
TR2020	21.438	20.438	25.625
TR2018	21.438	20.438	25.625
TR2016	21.438	20.438	25.625
TR1832	17.438	16.438	21.625
TR1828	17.438	16.438	21.625
TR1824	17.438	16.438	21.625
TR1822	17.438	16.438	21.625
TR1820	17.438	16.438	21.625
TR1818	17.438	16.438	21.625
TR1816	17.438	16.438	21.625

APPROVED AS COMPLYING WITH THE SOUTH FLORIDA BUILDING CODE
DATE November 05 1998
BY Manuel Gray
PRODUCT CONTROL DIVISION
BUILDING CODE COMPLIANCE OFFICE
ACCEPTANCE NO. 98-0304.02

OPTIONAL JAMB INSTALLATION

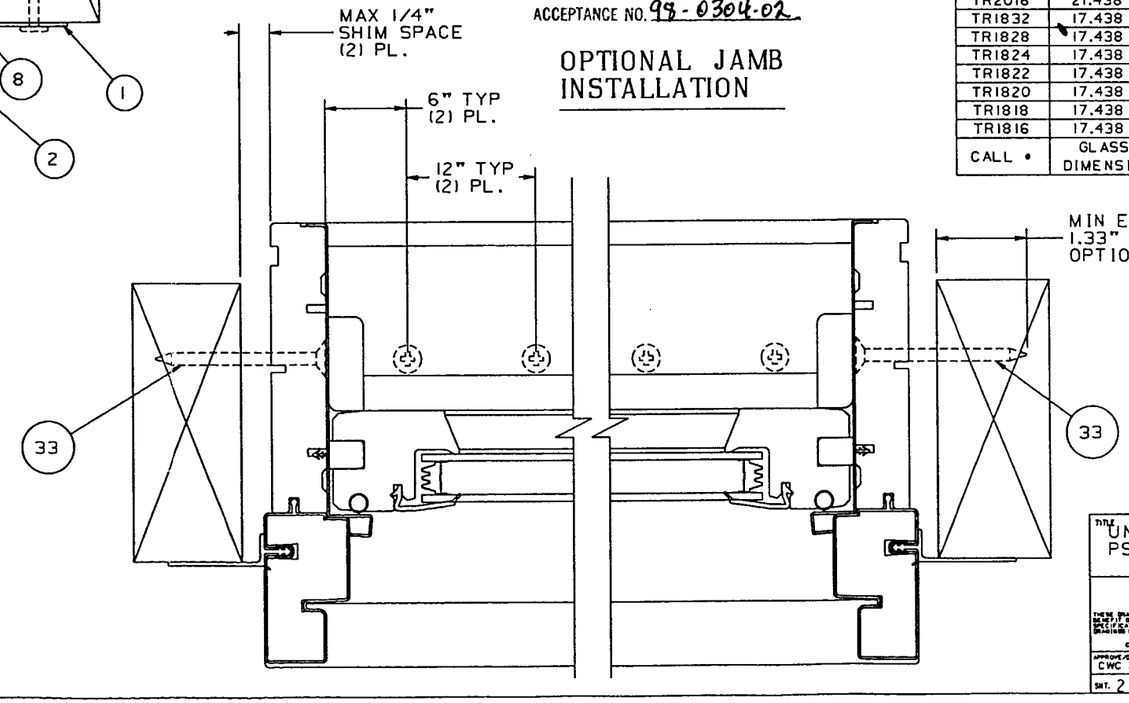

PRODUCT RENEWED
ACCEPTANCE No. 01-1018.01
EXPIRATION DATE November 5, 2006
By
PRODUCT CONTROL DIVISION
BUILDING CODE COMPLIANCE OFFICE

NOTES:

1. ALL DIMENSIONS ARE IN INCHES.
2. GLASS BITE IS .500" ON BOTH SIDES OF THE SASH. GLASS BITE = GLASS DIM. - DAYLIGHT DIM. / 2.
3. FRAME CONSTRUCTION: THE HEAD FRAME CORNERS WERE FINGER JOINTED AND SECURED WITH THREE 7/16" X 1-1/2" STAPLES PER CORNER WITH THE LOWER CORNERS DADOED AND SECURED WITH TWO SCREWS PER CORNER. THE OUTER FRAME MEMBERS WERE COPED, SEALED WITH SILICONE AND SECURED WITH ONE SCREW PER CORNER.

10/6/98
97-1212

TITLE UNIT, ASSEMBLY PSNL TRANSOM

Andersen Corporation
Bayport, Minnesota 55003

THESE DRAWINGS ARE PROVIDED AS A SERVICE BY ANDERSEN CORPORATION FOR THE BENEFIT OF ITS CUSTOMERS. THEY DO NOT ASSUME RESPONSIBILITY FOR ACCURACY OF DESIGN, FINAL SPECIFICATIONS, DRAWINGS AND FOR THE ACTUAL INSTALLATION SUGGESTED BY THESE DRAWINGS. LIKE WITH THE ARCHITECT, ENGINEER AND/OR CONTRACTOR.
COPYRIGHT ANDERSEN CORPORATION 1998. ALL RIGHTS RESERVED.

APPROVE DATE CWC 2-29-98
SHT. 2 OF 3
DRAWING NUMBER DADE-20226

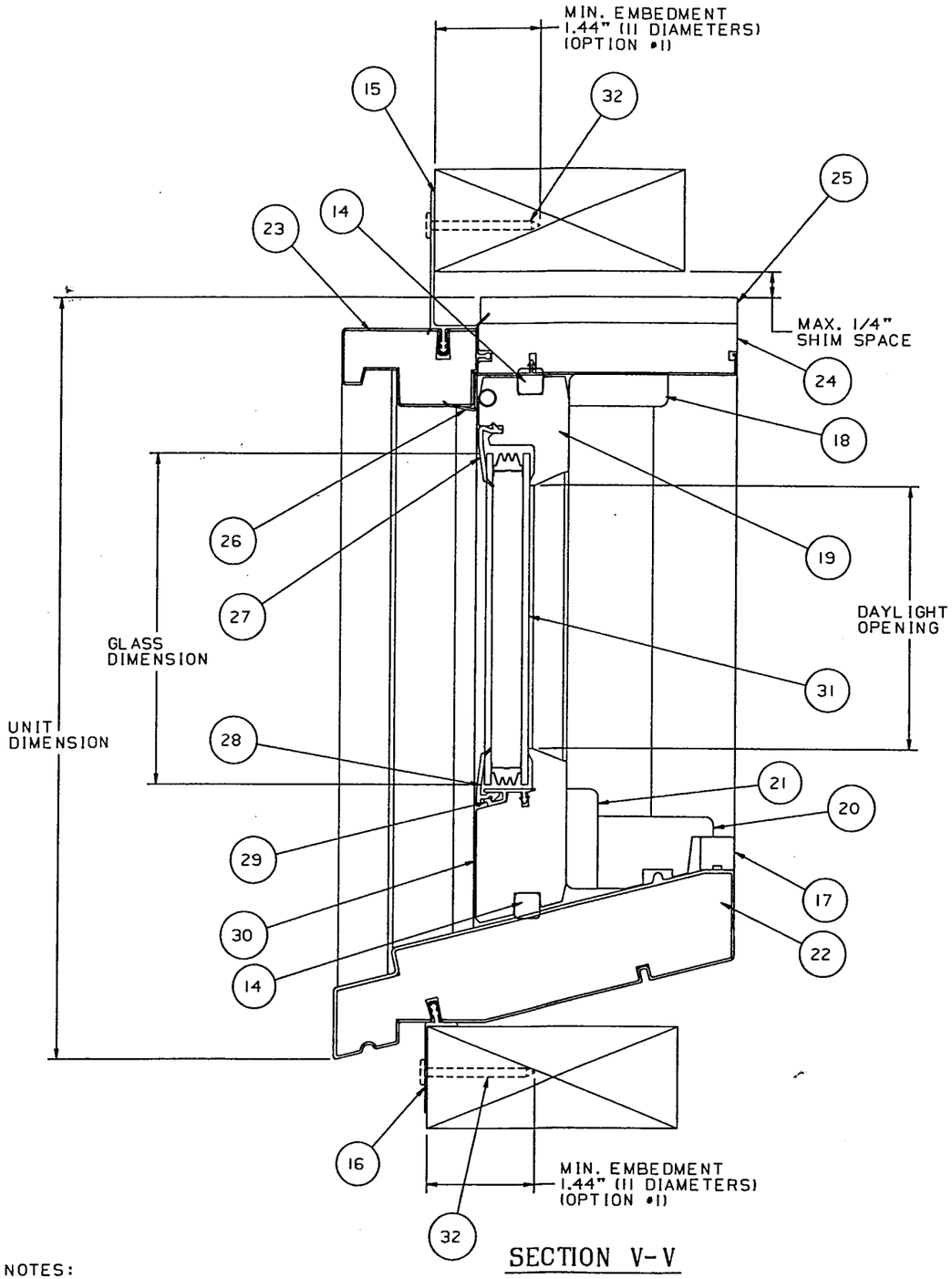

SECTION V-V

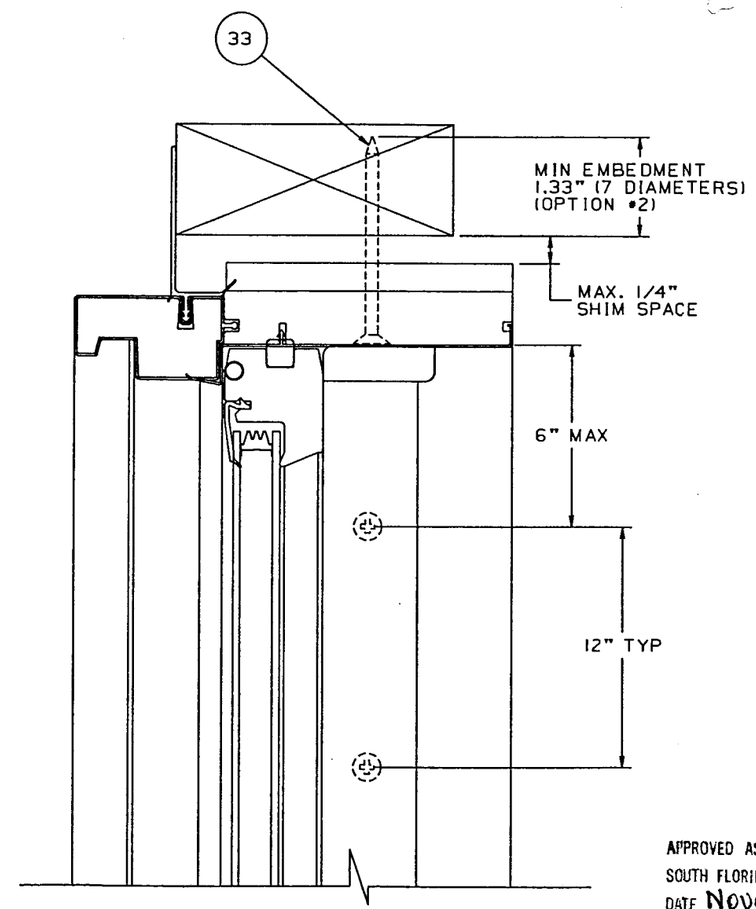

OPTIONAL JAMB INSTALLATION

TR3832	34.969	33.938	41.250
TR3432	34.969	33.938	41.250
TR3032	34.969	33.938	41.250
TR2832	34.969	33.938	41.250
TR2432	34.969	33.938	41.250
TR2032	34.969	33.938	41.250
TR1832	34.969	33.938	41.250
TR3828	28.969	27.938	35.250
TR3428	28.969	27.938	35.250
TR3028	28.969	27.938	35.250
TR2828	28.969	27.938	35.250
TR2428	28.969	27.938	35.250
TR2028	28.969	27.938	35.250
TR1828	28.969	27.938	35.250
TR3824	24.969	23.938	31.250
TR3424	24.969	23.938	31.250
TR3024	24.969	23.938	31.250
TR2824	24.969	23.938	31.250
TR2424	24.969	23.938	31.250
TR2024	24.969	23.938	31.250
TR1824	24.969	23.938	31.250
TR3822	22.969	21.938	29.250
TR3422	22.969	21.938	29.250
TR3022	22.969	21.938	29.250
TR2822	22.969	21.938	29.250
TR2422	22.969	21.938	29.250
TR2022	22.969	21.938	29.250
TR1822	22.969	21.938	29.250
TR3820	20.969	19.938	27.250
TR3420	20.969	19.938	27.250
TR3020	20.969	19.938	27.250
TR2820	20.969	19.938	27.250
TR2420	20.969	19.938	27.250
TR2020	20.969	19.938	27.250
TR1820	20.969	19.938	27.250
TR3818	16.969	13.938	21.250
TR3418	16.969	13.938	21.250
TR3018	16.969	13.938	21.250
TR2818	16.969	13.938	21.250
TR2418	16.969	13.938	21.250
TR2018	16.969	13.938	21.250
TR1818	16.969	15.938	23.250
TR3816	14.969	13.938	21.250
TR3416	14.969	13.938	21.250
TR3016	14.969	13.938	21.250
TR2816	14.969	13.938	21.250
TR2416	14.969	13.938	21.250
TR2016	14.969	13.938	21.250
TR1816	14.969	13.938	21.250
TR3410	9.719	8.750	15.250
TR3010	9.719	8.750	15.250
TR2810	9.719	8.750	15.250
TR2410	9.719	8.750	15.250
CALL #	GLASS DIMENSION	DAYLIGHT DIMENSION	UNIT HEIGHT

PRODUCT RENEWED

ACCEPTANCE No. 01-1018.01

EXPIRATION DATE November 5, 2006

By

PRODUCT CONTROL DIVISION
BUILDING CODE COMPLIANCE OFFICE

APPROVED AS COMPLYING WITH THE SOUTH FLORIDA BUILDING CODE
DATE November 05 1998
BY
PRODUCT CONTROL DIVISION
BUILDING CODE COMPLIANCE OFFICE
ACCEPTANCE NO. 98-0304.02

10/6/98
97-1212

NOTES:

1. ALL DIMENSIONS ARE IN INCHES.
2. GLASS BITE IS .485" ON BOTH SIDES OF THE SASH.
   GLASS BITE = GLASS DIM. - DAYLIGHT DIM. / 2.

TITLE UNIT, ASSEMBLY
PSNL TRANSOM

Andersen Corporation
Bayport, Minnesota 55003

THESE DRAWINGS ARE PROVIDED AS A SERVICE BY ANDERSEN CORPORATION FOR THE BENEFIT OF ITS CUSTOMERS. FINAL DESIGN RESPONSIBILITY FOR ACCURACY OF DESIGN, FINAL SPECIFICATIONS, DRAWINGS AND FOR ACTUAL INSTALLATION WORKSITES BY THE DRAWINGS LIES WITH THE ARCHITECT, ENGINEER AND/OR CONTRACTOR.
COPYRIGHT ANDERSEN CORPORATION 1998. ALL RIGHTS RESERVED.

APPROVE DATE CWC 2-29-98
DRAWING NUMBER DADE-20226
SHT. 3 OF 3