MIAMI-DADE COUNTY, FLORIDA
METRO-DADE FLAGLER BUILDING

BUILDING CODE COMPLIANCE OFFICE
METRO-DADE FLAGLER BUILDING
140 WEST FLAGLER STREET, SUITE 1603
MIAMI, FLORIDA 33130-1563
(305) 375-2901 FAX (305) 375-2908

CONTRACTOR LICENSING SECTION
(305) 375-2527 FAX (305) 375-2558

CONTRACTOR ENFORCEMENT DIVISION
(305) 375-2966 FAX (305) 375-2908

PRODUCT CONTROL DIVISION
(305) 375-2902 FAX (305) 372-6339

# PRODUCT CONTROL NOTICE OF ACCEPTANCE

**Binnings Pan American**
**3000 N.W. 125 Street**
**Miami ,FL 33167**

Your application for Notice of Acceptance (NOA) of:
**PA-9 Aluminum Sliding Glass Door**
under Chapter 8 of the Code of Miami-Dade County governing the use of Alternate Materials and Types of Construction, and completely described herein, has been recommended for acceptance by the Miami-Dade County Building Code Compliance Office (BCCO) under the conditions specified herein.

This NOA shall not be valid after the expiration date stated below. BCCO reserves the right to secure this product or material at any time from a jobsite or manufacturer's plant for quality control testing. If this product or material fails to perform in the approved manner, BCCO may revoke, modify, or suspend the use of such product or material immediately. BCCO reserves the right to revoke this approval, if it is determined by BCCO that this product or material fails to meet the requirements of the South Florida Building Code.

The expense of such testing will be incurred by the manufacturer.

**ACCEPTANCE NO.: 01-1018.04**
**EXPIRES: 11/16/2006**

Raul Rodriguez
Chief Product Control Division

**THIS IS THE COVERSHEET, SEE ADDITIONAL PAGES FOR SPECIFIC AND GENERAL CONDITIONS**
**BUILDING CODE & PRODUCT REVIEW COMMITTEE**

This application for Product Approval has been reviewed by the BCCO and approved by the Building Code and Product Review Committee to be used in Miami-Dade County, Florida under the conditions set forth above.

Francisco J. Quintana, R.A.
Director
Miami-Dade County
Building Code Compliance Office

**APPROVED: 12/06/2001**

## NOTICE OF ACCEPTANCE: SPECIFIC CONDITIONS

**1. SCOPE**

**1.1** This **revises** and **renews** Notice of Acceptance (NOA) No. **98-1110.06**, which was issued on December 3, 1998. It revises and renews the approval of an aluminum sliding glass door, as described in Section 2 of this NOA, designed to comply with the South Florida Building Code (SFBC), 1994 Edition for Miami-Dade County, for the locations where the pressure requirements, as determined by SFBC Chapter 23, do not exceed the Design Pressure Rating values indicated in the approved drawings.

**2. PRODUCT DESCRIPTION**

**2.1** The **Series "PA-9" Aluminum Sliding Glass Door, Models A, B, and C,** and its components shall be constructed in strict compliance with the following document: Drawing No **PA-09-DC-01**, Sheets 1 through 6 of 6, titled "PA-9 Sliding Glass Door Model A, Model B, and Model C," prepared by manufacturer, dated 10/28/98 and revised on 10/12/01, signed and sealed by William M. Myers, P.E., bearing the Miami-Dade County Product Control approval stamp with the NOA number and approval date by the Miami-Dade County Product Control Division. This document shall hereinafter be referred to as the approved drawings.

**3. LIMITATIONS**

**3.1** This approval applies to single unit applications only, as shown in approved drawings.

**3.2** Head receptor is not allowed to be used in this installation.

**4. INSTALLATION**

**4.1** The aluminum sliding glass door and its components shall be installed in strict compliance with the approved drawings.

**4.2** The installation of this product **will require** a hurricane protection system.

**5. LABELING**

**5.1** Each unit shall bear a permanent label with the manufacturer's name or logo, city, state and following statement: "Miami-Dade County Product Control Approved".

**6. BUILDING PERMIT REQUIREMENTS**

**6.1** Application for building permit shall be accompanied by copies of the following:

**6.1.1** This Notice of Acceptance

**6.1.2** Duplicate copies of the approved drawings, as identified in Section 2 of this Notice of Acceptance, clearly marked to show the components selected for the proposed installation.

**6.1.3** Any other documents required by the Building Official or the South Florida Building Code (SFBC) in order to properly evaluate the installation of this system.

Raul Rodriguez, Chief
Product Control Division

**Binnings Pan American** **ACCEPTANCE No.: 01-1018.04**

**APPROVED: December 6, 2001**

**EXPIRES: November 16, 2006**

## NOTICE OF ACCEPTANCE: STANDARD CONDITIONS

1. Renewal of this Acceptance (approval) shall be considered after a renewal application has been filed and the original submitted documentation, including test supporting data, engineering documents, are no older than eight (8) years.

2. Any and all approved products shall be permanently labeled with the manufacturer's name, city, state, and the following statement: "Miami-Dade County Product Control Approved", or as specifically stated in the specific conditions of this Acceptance.

3. Renewals of Acceptance will not be considered if:
   **a)** There has been a change in the South Florida Building Code affecting the evaluation of this product and the product is not in compliance with the code changes;
   **b)** The product is no longer the same product (identical) as the one originally approved;
   **c)** If the Acceptance holder has not complied with all the requirements of this acceptance, including the correct installation of the product;
   **d)** The engineer who originally prepared, signed and sealed the required documentation initially submitted is no longer practicing the engineering profession.

4. Any revision or change in the materials, use, and/or manufacture of the product or process shall automatically be cause for termination of this Acceptance, unless prior written approval has been requested (through the filing of a revision application with appropriate fee) and granted by this office.

5. Any of the following shall also be grounds for removal of this Acceptance:
   **a)** Unsatisfactory performance of this product or process.
   **b)** Misuse of this Acceptance as an endorsement of any product, for sales, advertising or any other purpose.

6. The Notice of Acceptance number preceded by the words Miami-Dade County, Florida, and followed by the expiration date may be displayed in advertising literature. If any portion of the Notice of Acceptance is displayed, then it shall be done in its entirety.

7. A copy of this Acceptance as well as approved drawings and other documents, where it applies, shall be provided to the user by the manufacturer or its distributors and shall be available for inspection at the job site at all time. The engineer need not reseal the copies.

8. Failure to comply with any section of this Acceptance shall be cause for termination and removal of Acceptance.

9. This Notice of Acceptance consists of pages 1, 2 and this last page 3.

**END OF THIS ACCEPTANCE**

Raul Rodriguez, Chief
Product Control Division

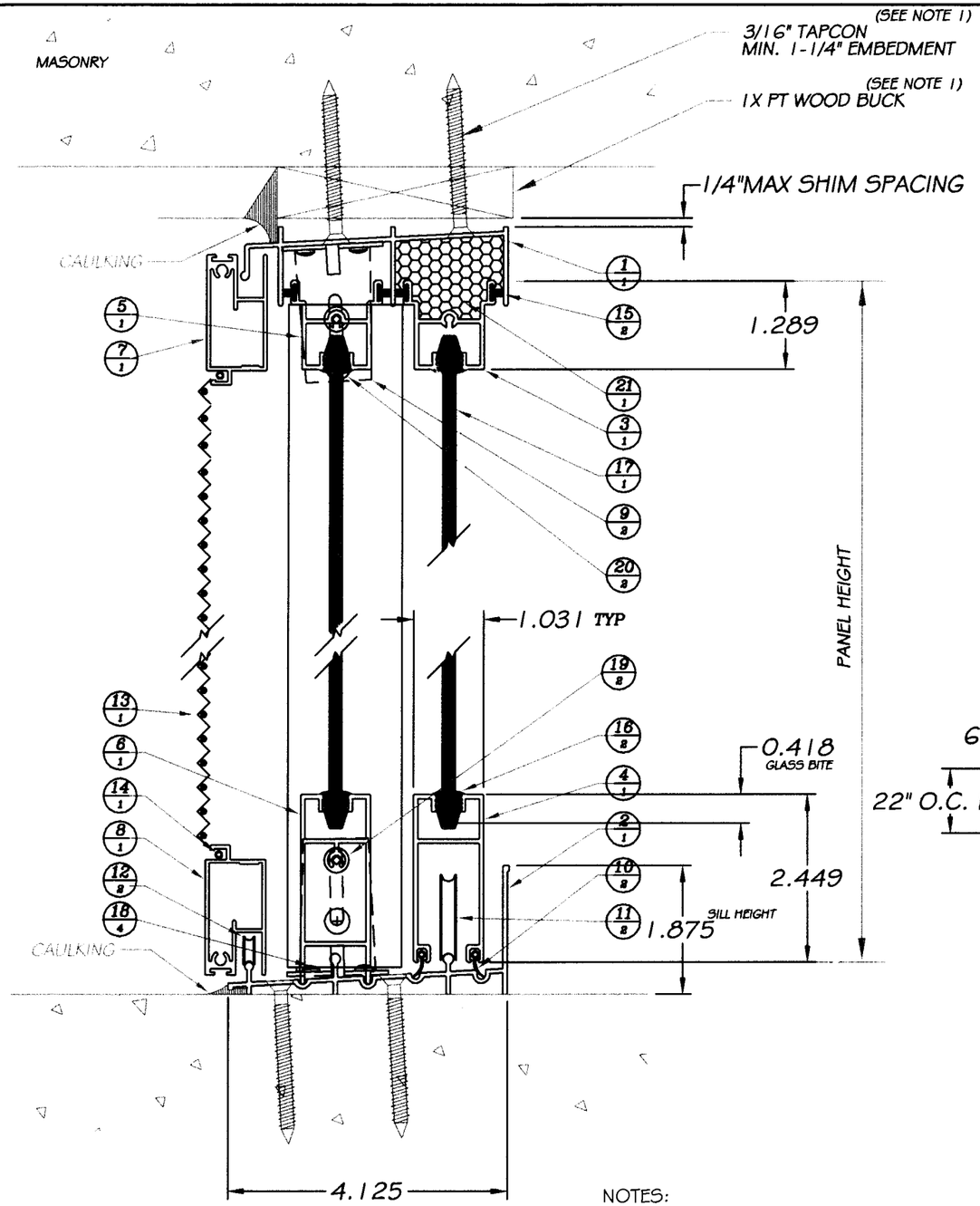


1 VERTICAL SECTION PA-09 SGD
HALF SCALE

| ITEM NUMBER | ITEM DESCRIPTION | QUANTITY | EXTRUSION NUMBER | PART NUMBER | MATERIAL | REMARKS |
|---|---|---|---|---|---|---|
| 1 | FRAME HEAD | 1/DOOR | 9-101 | 9-101-1 | 6063-T5 ALUM | |
| 2 | FRAME SILL | 1/DOOR | 9-87 | 9-87-1 | 6063-T5 ALUM | |
| 3 | MOVING PANEL HEAD | 1/PANEL | 9-22 | 9-22-1 | 6063-T5 ALUM | |
| 4 | MOVING PANEL SILL | 1/PANEL | 9-54 | 9-54-1 | 6063-T5 ALUM | |
| 5 | FIXED PANEL HEAD | 1/PANEL | 9-06 | 9-06-1 | 6063-T5 ALUM | |
| 6 | FIXED PANEL SILL | 1/PANEL | 9-146 | 9-146-1 | 6063-T5 ALUM | |
| 7 | SCREEN HEAD | 1/DOOR | 9-120 | 9-120-1 | 6063-T5 ALUM | |
| 8 | SCREEN SILL | 1/DOOR | 9-120 | 9-120-1 | 6063-T5 ALUM | |
| 9 | FIXED PANEL INTERLOCK ANGLE BRACKET | 2/STILE | 9-141 | | 6063-T5 ALUM | |
| 10 | MOVING PANEL BOTTOM RAIL WEATHERSTRIPPING | 2/PANEL | | 9-2006 | VINYL | |
| 11 | ROLLER ASSEMBLY | 2/PANEL | | 9-6031 | VARIES | |
| 12 | SCREEN ROLLER ASSEMBLY | 2/SCREENS | | 4512-1042 | VARIES | |
| 13 | SCREEN | 1/SCREEN | | 18 X 16 | FIBERGLASS | |
| 14 | SCREEN SPLINE | 1/SCREEN | 82000 | | VINYL | |
| 15 | TOP RAIL WEATHERSTRIPPING | 2/PANEL | | 8-2004 | PILE | |
| 16 | 3/16" GLAZING VINYL | 2/PANEL | | 9-2007 | VINYL | |
| 17 | 3/16" TEMPERED GLAZING | 1/PANEL | | | GLASS | |
| 18 | FIXED PANEL INTERLOCK STILE ANGLE BRACKET #10 X 1 1/2" SMS | 4/STILE | | 9-8010 | STEEL | |
| 10 | FIXED PANEL INTERLOCK STILE CORNER CONSTRUCTION #8 X 7/8" SMS | 2/STILE | | 9-8001 | STEEL | |
| 20 | FIXED PANEL INTERLOCK STILE ANGLE BRACKET #8 X 1" SMS | 2/STILE | | 9-8009 | STEEL | |
| 21 | MOVING PANEL INTERIOR INTERLOCK STILE HEAD FOAM PAD | 1/STILE | | 9-2024 | FOAM | |

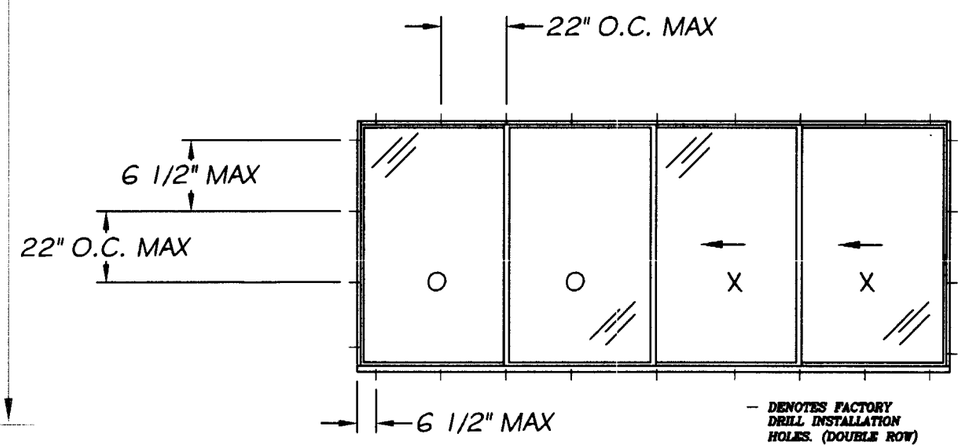


PA-09 SGD ELEVATION

APPROVED AS COMPLYING WITH THE
SOUTH FLORIDA BUILDING CODE
DATE December 6, 2001
BY
PRODUCT CONTROL DIVISION
BUILDING CODE COMPLIANCE OFFICE
ACCEPTANCE NO. 01-1018.04

ROBT. E. FISHER
WM. M. MEYERS, P.E.
Consulting Engineers
9301 N.E. 6th Ave. C-300
Miami Shores, FL 33138
(305) 758-3117 557-4006 Fax 362-6282

FLA. 18755
STRUCTURAL
Date: 11/05/01

NOTES:
1. 1X BUCK SHOWN. 2X PT BUCK PERMISSIBLE WITH #10 SMS MIN 1 1/4" EMBEDMENT.
2. OOXX CONFIGURATION SHOWN. APPLIES TO OOXX, XXOO, OXXO, OX, XO, OXX, XXO, XX.
3. SEE PAGE PA-09-DC-02 FOR DESIGN PRESSURES.

Revision Notes: ---

BINNINGS FAN AMERICAN
AN AMERICAN ARCHITECTURAL PRODUCTS CORP. COMPANY
3000 N.W. 125th Street
Miami, Florida 33167
(305)681-0045

| Drawn Class: | Part Class: | Prod Category: | Series/Model: | Item: | Sheet: |
|---|---|---|---|---|---|
| ASSY | DC | SGD | PA-09 | N/A | 1 OF 6 |

Engineer: William Myers
Drawn By: TLB — Date Drawn: 10/26/98
Revised By: R.R. — Date Revised: 10/12/01

PA-9 SLIDING GLASS DOOR MODEL 'A'
VERTICAL CROSS SECTION

Part Number: N/A
Drawing Number: PA-09-DC-01
Revision Level: A

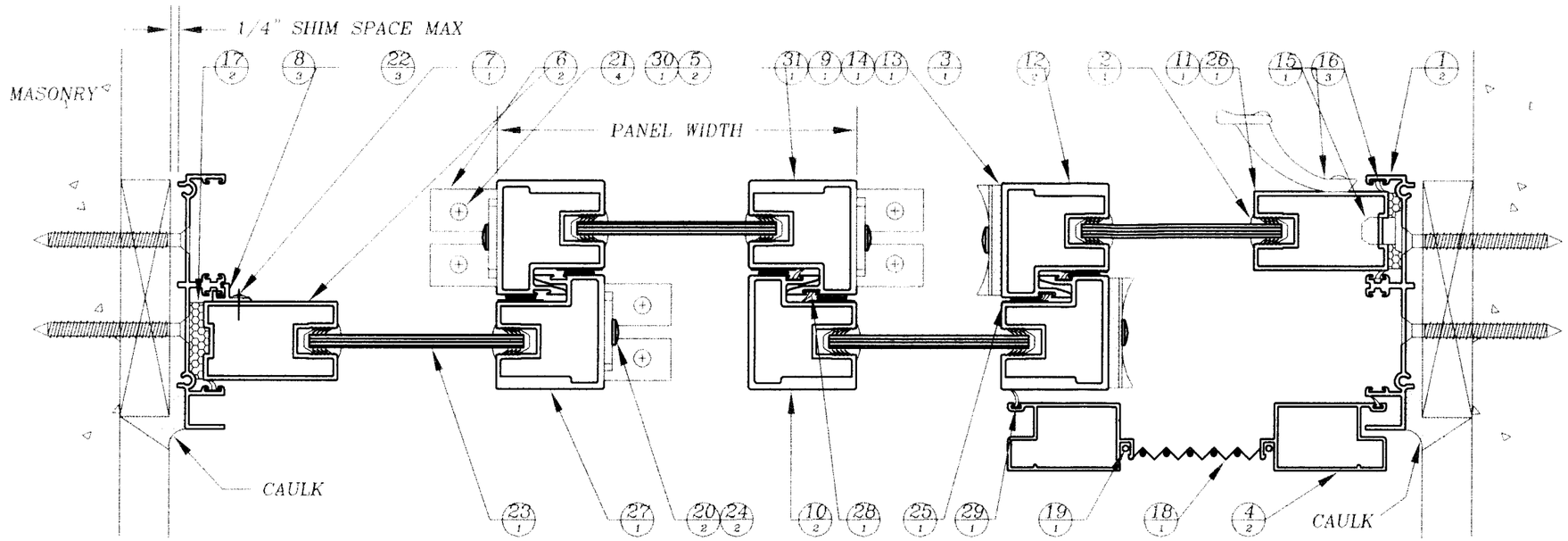


## 2 HORIZONTAL SECTION PA-09 SGD

HALF SCALE

**Model A Design Pressures (Comparative Analysis)**

| Door Height | Panel Width | + DP | - DP |
|---|---|---|---|
| 80 | 24 | 45.33 | -70.13 |
| 80 | 28 | 45.33 | -62.08 |
| 80 | 30 | 45.33 | -58.91 |
| 80 | 32 | 45.33 | -56.16 |
| 80 | 34 | 45.33 | -53.77 |
| 80 | 36 | 45.33 | -51.68 |
| 80 | 38 | 45.33 | -47.29 |
| 80 | 40 | 40.96 | -40.96 |
| 80 | 42 | 36.07 | -36.07 |
| 80 | 44 | 34.93 | -34.93 |
| 96 | 24 | 45.33 | -55.93 |
| 96 | 28 | 45.33 | -49.18 |
| 96 | 30 | 45.33 | -46.51 |
| 96 | 32 | 44.18 | -44.18 |
| 96 | 34 | 42.15 | -42.15 |
| 96 | 36 | 40.35 | -40.35 |
| 96 | 38 | 38.76 | -38.76 |
| 96 | 40 | 37.34 | -37.34 |
| 96 | 42 | 35.76 | -35.76 |
| 96 | 44 | 31.47 | -31.47 |

NOTES:

1) 1X BUCK SHOWN. 2X PT BUCK PERMISSIBLE WITH #10 SMS MIN 1-1/4" EMBEDMENT.
2) OOXX CONFIGURATION SHOWN. APPLIES TO OOXX, XXOO, OXXO, OX, XO, OXX, XXO,XX.

### Horizontal Section Bill of Material

| Part Number | Item Description | Quantity | Extrusion Number | Part Number | Material | Remarks |
|---|---|---|---|---|---|---|
| 1 | Frame Jamb | 2 / Door | 9-86 | 9-86-1 | 6063 T-5 | |
| 2 | Moving Panel Lock Stile | 1 / Panel | 9-83 | 9-83-1 | 6063 T-5 | |
| 3 | Moving Panel Interior Interlock Stile | 1 / Panel | 9-132 | 9-132-2 | 6063 T-5 | |
| 4 | Moving Panel Screen Stile | 2 / Screen | 9-121 | 9-121-1 | 6063 T-5 | |
| 5 | Fixed Panel Interior Interlock Stile | 2 / Panel | 9-132 | 9-132-2 | 6063 T-5 | |
| 6 | Fixed Panel Interlock Stile Angle Bracket | 2 / Stile | 9-141 | | 6063 T-5 | |
| 7 | Fixed Panel Side Stile | 1 / Panel | 9-83 | 9-83-1 | 6063 T-5 | |
| 8 | Fixed Panel Retainer Anchor | 3 / Door | 9-11 | 9-11-1 | 6063 T-5 | |
| 9 | Moving Panel Sweep | 1 / Panel | 9-42A | | 6063 T-5 | |
| 10 | Moving Panel Exterior Interlock Stile | 2 / Panel | 9-132 | 9-132-2 | 6063 T-5 | |
| 11 | Moving panel Lock Assembly Handle | 1 / Panel | | 9-5029 | | |
| 12 | 3/16" Glazing Vinyl | 2 / Panel | | 9-2007 | Vinyl | |
| 13 | Moving Panel Sweep Pad | 1 / Panel | | 9-2025A | | |
| 14 | Moving Panel Sweep Weatherstrip | 1 / Panel | | 9-2015 | Vinyl | |
| 15 | Frame Jamb Lock Keeper | 1 / Door | | 16-6002 | | |
| 16 | Frame Jamb Weatherstrip | 3 / Door | | 9-2019 | Vinyl | |
| 17 | Frame Jamb Foam Pad | 2 / Jamb | | 9-2023 | Foam | |
| 18 | Screen | 1/ Screen | | 18X16 | Fiberglass | |
| 19 | Screen Spline | 1 / Screen | 82000 | | Vinyl | |
| 20 | Fixed Panel Interlock Stile #8 X 1" SMS | 2 / Stile | | 9-8009 | Steel | |
| 21 | Fix Panel Interlock Stile #10 X 1 1/2" SMS | 4 / Stile | | 9-8010 | Steel | |
| 22 | #6 X 3/8" TEK Screw | 3 / Door | | 9-8004 | Steel | |
| 23 | 3/16" Tempered Glazing | 1 / Panel | | | Glass | |
| 24 | Fixed Panel Interlock Stile #8 X 7/8" SMS | 2 / Stile | | 9-8001 | Steel | |
| 25 | Interlock Stile Pile Pad | 1 / Stile | | 9-2026 | Pile | |
| 26 | Moving Panel Interlock Lock Assembly | 1 / Panel | | 9-6028 | | |
| 27 | Fixed Panel Exterior Interlock Stile | 1 / Panel | 9-132 | 9-132-2 | 6063 T-5 | |
| 28 | Interlock Stile Weatherstrip | 1 / Stile | | 9-2019 | Vinyl | |
| 29 | Screen Stile Weatherstrip | 1 / Stile | | 9-2019 | Vinyl | |
| 30 | Fixed Panel Interlock Stile Foam Pad | 1 / Stile | | 9-2024 | Foam | |
| 31 | Moving Panel Sweep #8 X 1" SMS | 1 / Stile | | 9-8009 | Steel | |

APPROVED AS COMPLYING WITH THE
SOUTH FLORIDA BUILDING CODE
DATE December 6, 2001
BY
PRODUCT CONTROL DIVISION
BUILDING CODE COMPLIANCE OFFICE
ACCEPTANCE NO 01-1018.04

ROBT. E. FISHER
WM. M. MEYERS, P.E.
Consulting Engineers
9301 N.E. 6th Ave. C-300
Miami Shores, FL 33138
(305) 758-3117 557-4006 Fax 362-6282

FLA. 18755
STRUCTURAL
Date: 11/08/01

Revision Notes:
A- Design Pressures Revised

BINNINGS PAN AMERICAN
AN AMERICAN ARCHITECTURAL PRODUCTS CORP. COMPANY

3000 N.W. 125TH STREET
Miami, Florida 33167
(305)681-0045

| Draw Class: | Part Class: | Prod Category: | Series/Model: | Item: | Sheet: |
|---|---|---|---|---|---|
| ASSY | DC | SGD | PA-09 | N/A | 2 OF 6 |

Material: William Myers
Drawn By: TLB — Date Drawn: 10/28/98
Revised By: R.R — Date Revised: 10/12/01

PA-9 SLIDING GLASS DOOR MODEL 'A'
HORIZONTAL CROSS SECTION

Part Number: N/A — Drawing Number: PA-09-DC-02 — Revision Level: A

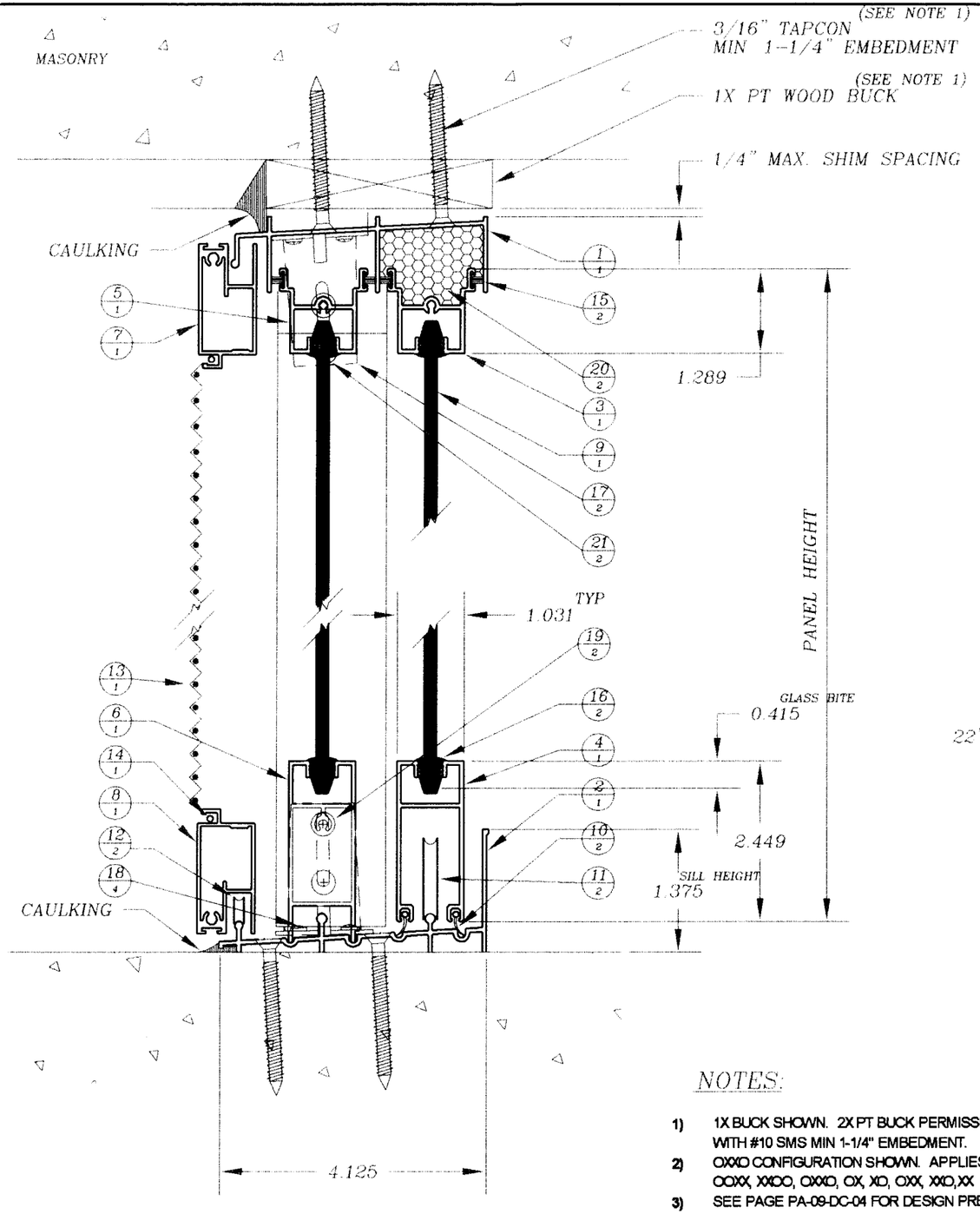


1 VERTICAL SECTION PA-09 SGD
HALF SCALE

## Vertical Section Bill of Material

| Part Number | Item Description | Quantity | Extrusion Number | Part Number | Material | Remarks |
|---|---|---|---|---|---|---|
| 1 | Frame Head | 1 / Door | 9-101 | 9-101-1 | 6063 T-5 | |
| 2 | Frame Sill | 1 / Door | 9-87 | 9-87-1 | 6063 T-5 | |
| 3 | Moving Panel Head | 1 / Panel | 9-22 | 9-22-1 | 6063 T-5 | |
| 4 | Moving Panel Sill | 1 / Panel | 9-54 | 9-54-1 | 6063 T-5 | |
| 5 | Fixed Panel Head | 1 / Panel | 9-06 | 9-06-1 | 6063 T-5 | |
| 6 | Fixed Panel Sill | 1 / Panel | 9-146 | 9-146-1 | 6063 T-5 | |
| 7 | Screen Head | 1 / Screen | 9-120 | 9-120-1 | 6063 T-5 | |
| 8 | Screen Sill | 1 / Screen | 9-120 | 9-120-1 | 6063 T-5 | |
| 9 | 3/16" Tempered Glazing | 1 / Panel | | | Glass | |
| 10 | Moving Panel Bottom Rail Weatherstripping | 2 / Panel | | 9-2006 | Vinyl | |
| 11 | Moving Panel Roller Assembly | 2 / Panel | | 9-6031 | Varies | |
| 12 | Screen Roller Assembly | 2 / Screen | | 4512-1042 | Varies | |
| 13 | Screen | 1 / Screen | | 18X16 | Fiberglass | |
| 14 | Screen spline | 1 / Screen | 82000 | | Vinyl | |
| 15 | Top Rail Weatherstripping | 2 / Panel | | 8-2004 | Pile | |
| 16 | 3/16" Glazing Vinyl | 2 / Panel | | 9-2007 | Vinyl | |
| 17 | Fixed Panel Angle Bracket | 2 / Panel | 9-141 | | 6063 T-5 | |
| 18 | Fixed Panel Interlock Stile Angle Bracket #10 X 1 1/2" SMS | 4 / Stile | | 9-8010 | Steel | |
| 19 | Fixed Panel Interlock Stile Construction Corner #8 X 7/8" SMS | 2 / Stile | | 9-8001 | Steel | |
| 20 | Moving Panel Interior Interlock Stile Head Foam Pad | 1 / Stile | | 9-2024 | Foam | |
| 21 | Fixed Panel Interlock Stile Angle Bracket #8 X 1" SMS | 2 / Stile | | 9-8009 | Steel | |

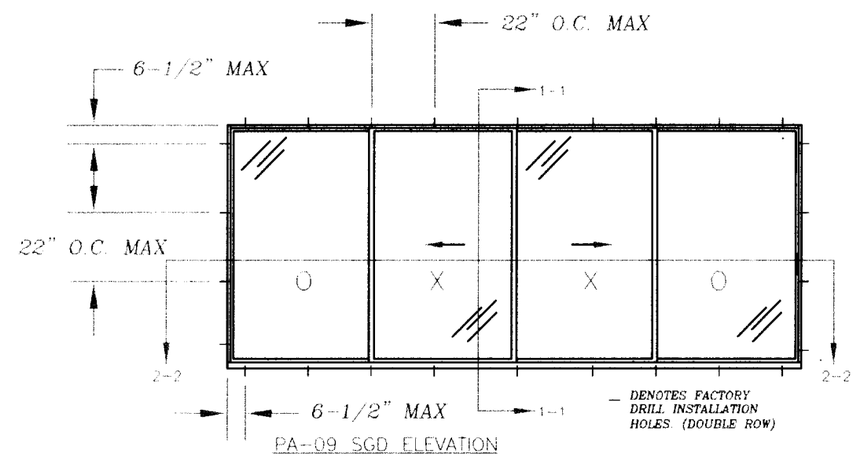


PA-09 SGD ELEVATION

APPROVED AS COMPLYING WITH THE
SOUTH FLORIDA BUILDING CODE
DATE December 6, 2001
BY
PRODUCT CONTROL DIVISION
BUILDING CODE COMPLIANCE OFFICE
ACCEPTANCE NO. 01-1018.04


ROBT. E. FISHER
WM. M. MEYERS, P.E.
Consulting Engineers
9301 N.E. 6th Ave. C-300
Miami Shores, FL 33138
(305) 758-3117 557-4006 Fax 362-6282

FLA. 18755
STRUCTURAL


Date: 11/05/01

NOTES:

1) 1X BUCK SHOWN. 2X PT BUCK PERMISSIBLE WITH #10 SMS MIN 1-1/4" EMBEDMENT.
2) OXXO CONFIGURATION SHOWN. APPLIES TO OOXX, XXOO, OXXO, OX, XO, OXX, XXO,XX
3) SEE PAGE PA-09-DC-04 FOR DESIGN PRESSURES

Revision Notes: ---

BINNINGS PAN AMERICAN
AN AMERICAN ARCHITECTURAL PRODUCTS CORP. COMPANY
P.O. Box 630038
2805 N.E. 185th Street
Miami, Florida 33163
(305)931-2350

| Draw Class: | Part Class: | Prod Category: | Series/Model: | Item: | Sheet: |
|---|---|---|---|---|---|
| ASSY | DC | SGD | PA-09 | N/A | 3 OF 6 |

Engineer: William Myers
Drawn By: TLB — Date Drawn: 10/28/98
Revised By: --- — Date Revised: __/__/__

PA-9 SLIDING GLASS DOOR MODEL 'B'
VERTICAL CROSS SECTION

Part Number: N/A — Drawing Number: PA-09-DC-03 — Revision Level: ---

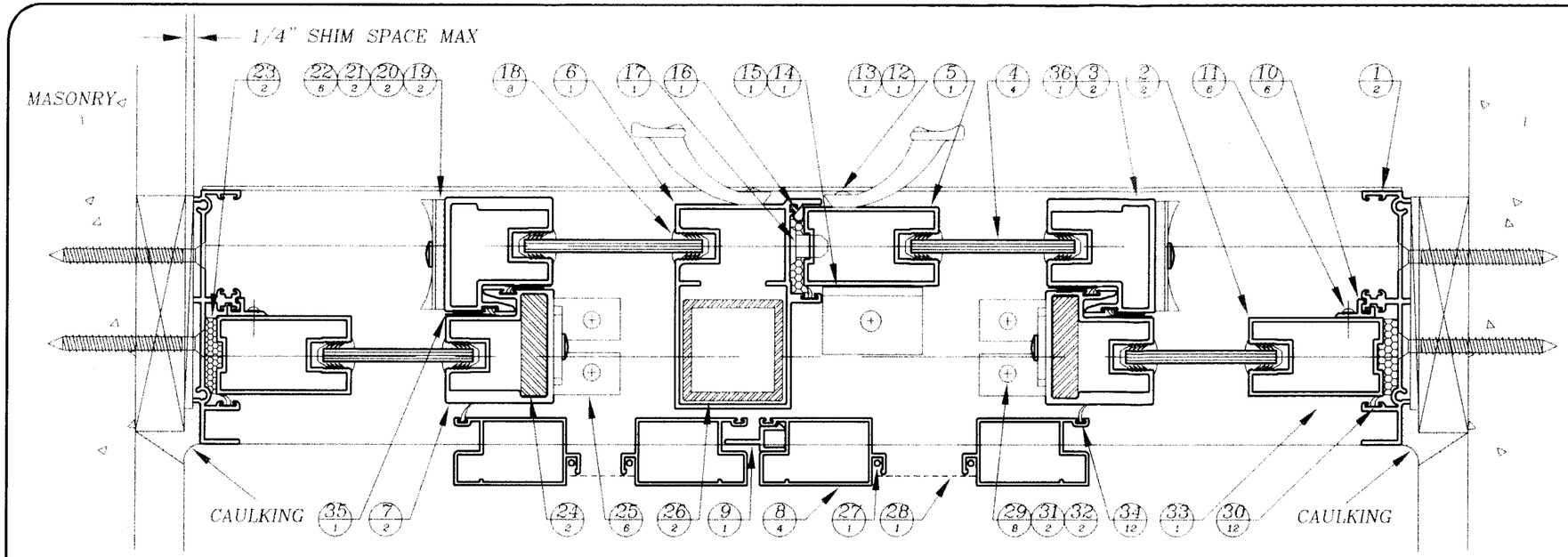


## 2 HORIZONTAL SECTION PA-09 SGD

HALF SCALE

**Model B Design Pressures (Comparative Analysis)**

| Door Height | Panel Width | + DP | - DP |
|---|---|---|---|
| 80 | 24 | 61.33 | -106.01 |
| 80 | 28 | 61.33 | -93.85 |
| 80 | 30 | 61.33 | -89.05 |
| 80 | 32 | 61.33 | -84.90 |
| 80 | 34 | 61.33 | -81.28 |
| 80 | 36 | 61.33 | -78.11 |
| 80 | 38 | 61.33 | -71.49 |
| 80 | 40 | 61.33 | -61.91 |
| 80 | 42 | 54.52 | -54.52 |
| 96 | 44 | 52.80 | -52.80 |
| 96 | 48 | 43.37 | -43.37 |
| 96 | 24 | 61.33 | -84.54 |
| 96 | 28 | 61.33 | -74.35 |
| 96 | 30 | 61.33 | -70.30 |
| 96 | 32 | 61.33 | -66.79 |
| 96 | 34 | 61.33 | -63.71 |
| 96 | 36 | 60.99 | -60.99 |
| 96 | 38 | 58.59 | -58.59 |
| 96 | 40 | 56.44 | -56.44 |
| 96 | 42 | 54.06 | -54.06 |
| 96 | 44 | 47.56 | -47.56 |
| 96 | 48 | 37.57 | -37.57 |

NOTES:

1- 1X BUCK SHOWN. 2X PT BUCK PERMISSIBLE WITH #10 SMS MIN 1-1/4" EMBEDMENT.
2- OXXO CONFIGURATION SHOWN. APPLIES OOXX, XXOO, OXXO, OX, XO, OXX, XXO, XX.
3- MEETS ASTM E-1300

### Horizontal Section Bill of Material

| Part Number | Item Description | Quantity | Extrusion Number | Part Number | Material | Remarks |
|---|---|---|---|---|---|---|
| 1 | Frame Jamb | 2 / Door | 9-86 | 9-86-1 | 6063 T-5 | |
| 2 | Fixed Panel Side Stile | 2 / Panel | 9-83 | 9-83-1 | 6063 T-5 | |
| 3 | Moving Panel Interlock Stile | 2 / Panel | 9-132 | 9-132-2 | 6063 T-5 | |
| 4 | 3/16" Tempered Glazing | 1 / Panel | | | Glass | |
| 5 | Moving Panel lock Stile | 1 / Panel | 9-83 | 9-31-1 | 6063 T-5 | |
| 6 | Moving Panel Female Astragal Stile | 1 / Panel | 9-100 | 9-100-2 | 6063 T-5 | |
| 7 | Fixed Panel Interlock Stile | 2 / Panel | 9-132 | 9-132-2 | 6063 T-5 | |
| 8 | Moving Panel Screen Stile | 2 / Screen | 9-121 | 9-121-1 | 6063 T-5 | |
| 9 | Screen Retainer | 1 / Door | 9-122 | 9-122-1 | 6063 T-5 | |
| 10 | Fixed Panel Retainer Anchor | 3 / Jamb | 9-11 | 9-3098 | 6063 T-5 | |
| 11 | #6 X 3/8" TEK Screw | 3 / Jamb | | 9-8004 | Steel | |
| 12 | Moving Panel Lock Assembly | 1 / Panel | | 9-6028 | | |
| 13 | Moving panel Lock Assembly Handle | 1 / Panel | | 9-5029 | | |
| 14 | Moving Panel Lock Stile Angle Bracket | 2 / Panel | A19-09 | | 6063 T-5 | |
| 15 | Male Astragal Angle Bracket #10 X 1" SMS | 1 / Door | | 9-8013 | Steel | |
| 16 | Moving Panel Female Astragal Weatherstrip | 1 / Panel | | 03-2003C | Vinyl | |
| 17 | Lock Keeper | 1 / Door | | 16-6002 | 6063 T-5 | |
| 18 | 3/16" Glazing Vinyl | 2 / Panel | | 9-2007 | Vinyl | |
| 19 | Moving Panel Sweep Pad | 1 / Panel | | 9-2025A | | |
| 20 | Moving Panel Sweep Weatherstrip | 1 / Panel | | 9-2015 | Vinyl | |
| 21 | Moving Panel Sweep | 1 / Panel | 9-42A | | 6063 T-5 | |
| 22 | Moving Panel Sweep #8 X 1" SMS | 1 / Panel | | 9-8009 | Steel | |
| 23 | Frame Jamb Foam Pad | 2 / Jamb | | 9-2023 | Foam | |
| 24 | Fixed Panel 3/8" X 1 1/2" Steel Bar | 1 / Panel | | 9-6037 | Steel | |
| 25 | Fixed Panel Angle Bracket | 2 / Panel | 9-141 | | 6063 T-5 | |
| 26 | Female Astragal 1 1/2" X 1 1/2" X 1/8" Steel Tube | 1 / Panel | | 9-6036 | Steel | |
| 27 | Screen Spline | 1 / Screen | 82000 | | Vinyl | |
| 28 | Screen | 1 / Screen | | 18X16 | Fiberglass | |
| 29 | Fixed Panel Angle Bracket #10 X 1 1/2" SMS | 1 / Panel | | 9-8010 | Steel | |
| 30 | Frame Jamb | 1 / Jamb | | 9-2019 | Vinyl | |
| 31 | Fixed Panel Angle Bracket #8 X 7/8" SMS | 1 / Panel | | 9-8001 | Steel | |
| 32 | Fixed Panel Angle Bracket #8 X 1" SMS | 1 / Panel | | 9-8009 | Steel | |
| 33 | Interlock Stile Weatherstrip | 1 / Panel | | 9-2019 | Vinyl | |
| 34 | Screen Weatherstrip | 2 / Screen | | 9-2019 | Vinyl | |
| 35 | Interlock Stile Pile Pad | 1 / Stile | | 9-2026 | Pile | |
| 36 | Interior Interlock Stile Foam Pad | 1 / Stile | | 9-2024 | Foam | |


ROBT. E. FISHER
WM. M. MEYERS, P.E.
Consulting Engineers
9301 N.E. 6th Ave. C-300
Miami Shores, FL 33138
(305) 758-3117 557-4006 Fax 362-6282


APPROVED AS COMPLYING WITH THE SOUTH FLORIDA BUILDING CODE
DATE December 6, 2001
BY
PRODUCT CONTROL DIVISION
BUILDING CODE COMPLIANCE OFFICE
ACCEPTANCE NO. 01-1018.04

FLA. 18755
STRUCTURAL
Date: 11/06/01

Revision Notes:
A- Design Pressures Revised

BINNINGS PAN AMERICAN
AN AMERICAN ARCHITECTURAL PRODUCTS CORP. COMPANY

3000 N.W. 125th STREET
Miami, Florida 33167
(305)681-0045

| Draw Class: | Part Class: | Prod Category: | Series/Model: | Item: | Sheet: |
|---|---|---|---|---|---|
| ASSY | DC | SGD | PA-09 | N/A | 4 OF 6 |

Material: William Myers
Drawn By: TLB — Date Drawn: 10/26/96
Revised By: R.R. — Date Revised: 10/12/01

PA-9 SLIDING GLASS DOOR MODEL 'B'
HORIZONTAL CROSS SECTION

Part Number: N/A
Drawing Number: PA-09-DC-04
Revision Level: A

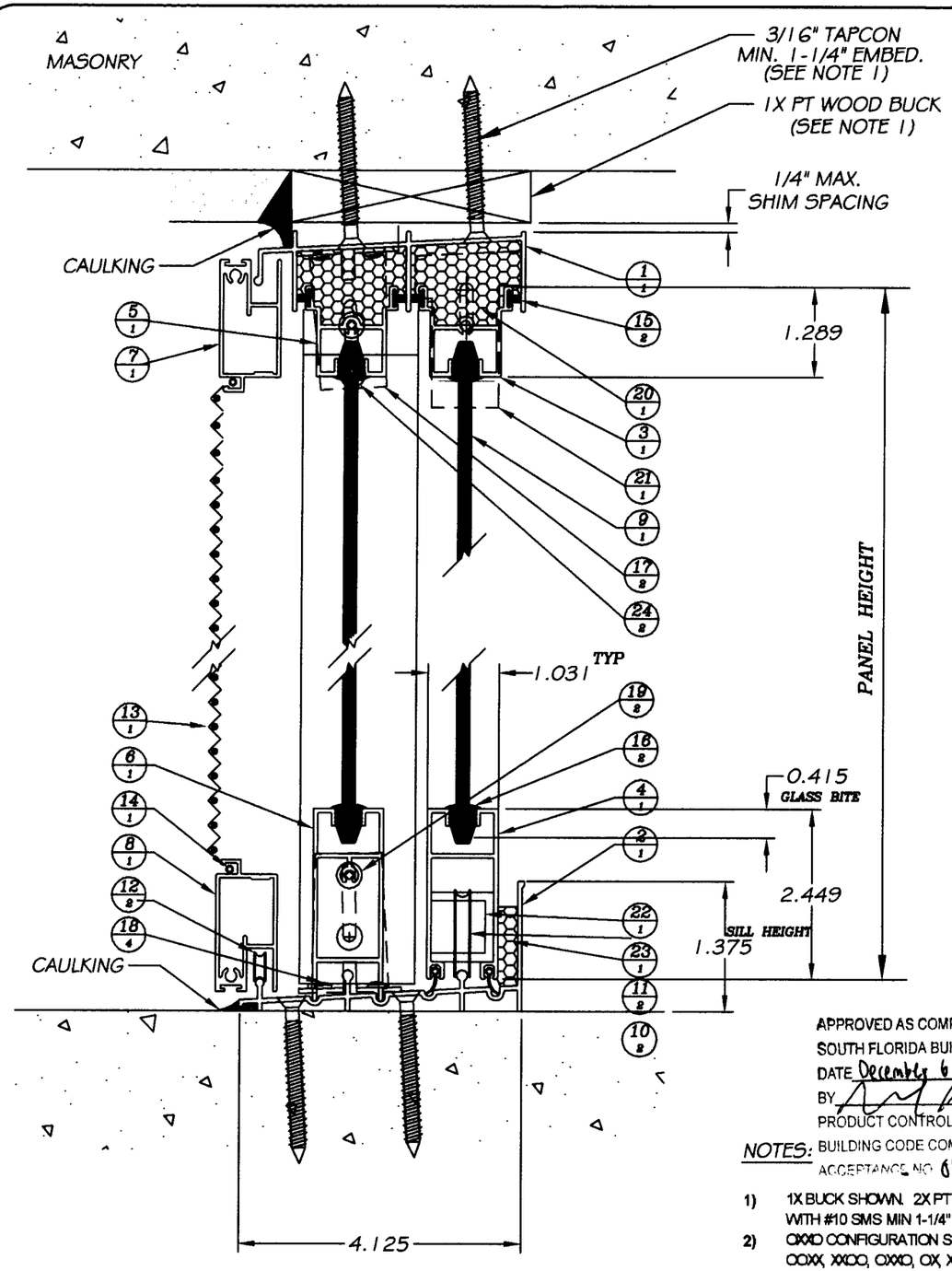


## Vertical Section Bill of Material

| Part Number | Item Description | Quantity | Extrusion Number | Part Number | Material | Remarks |
|---|---|---|---|---|---|---|
| 1 | Frame Head | 1 / Door | 9-101 | 9-101-1 | 6063 T-5 | |
| 2 | Frame Sill | 1 / Door | 9-87 | 9-87-1 | 6063 T-5 | |
| 3 | Moving Panel Head | 1 / Panel | 9-22 | 9-22-1 | 6063 T-5 | |
| 4 | Moving Panel Sill | 1 / Panel | 9-54 | 9-54-1 | 6063 T-5 | |
| 5 | Fixed Panel Head | 1 / Panel | 9-06 | 9-06-1 | 6063 T-5 | |
| 6 | Fixed Panel Sill | 1 / Panel | 9-146 | 9-146-1 | 6063 T-5 | |
| 7 | Screen Head | 1 / Screen | 9-120 | 9-120-1 | 6063 T-5 | |
| 8 | Screen Sill | 1 / Screen | 9-120 | 9-120-1 | 6063 T-5 | |
| 9 | 3/16" Tempered Glazing | 1 / Panel | | | Glass | |
| 10 | Moving Panel Bottom Rail Weatherstripping | 2 / Panel | | 9-2006 | Vinyl | |
| 11 | Moving Panel Roller Assembly | 2 / Panel | | 9-6031 | Varies | |
| 12 | Screen Roller Assembly | 2 / Screen | | 4512-1042 | Varies | |
| 13 | Screen | 1 / Screen | | 18X16 | Fiberglass | |
| 14 | Screen spline | 1 / Screen | 82000 | | Vinyl | |
| 15 | Top Rail Weatherstripping | 2 / Panel | | 8-2004 | Pile | |
| 16 | 3/16" Glazing Vinyl | 2 / Panel | | 9-2007 | Vinyl | |
| 17 | Fixed Panel Angle Bracket | 2 / Panel | 9-141 | | 6063 T-5 | |
| 18 | Fixed Panel Angle Bracket #10 X 1 1/2" SMS | 4 / Panel | | 9-8010 | Steel | |
| 19 | Fixed Panel Angle Bracket #8 X 7/8" SMS | 2 / Panel | | 9-8001 | Steel | |
| 20 | Interlock Stile Head Foam Pad | 1 / Stile | | 9-2024 | Foam | |
| 21 | Astragal Clip Plate | 1 / Panel | 9-137 | 9-6033 | 6063 T-5 | |
| 22 | Moving Panel Bottom Rail Channel | 1 / Panel | 9-139 | 9-139-1 | 6063 T-5 | |
| 23 | Moving Panel Lock foam Pad | 1 / Panel | | 9-2023 | Foam | |
| 24 | Fixed Panel Angle Bracket #8 X 1" SMS | 2 / Panel | | 9-8009 | Steel | |

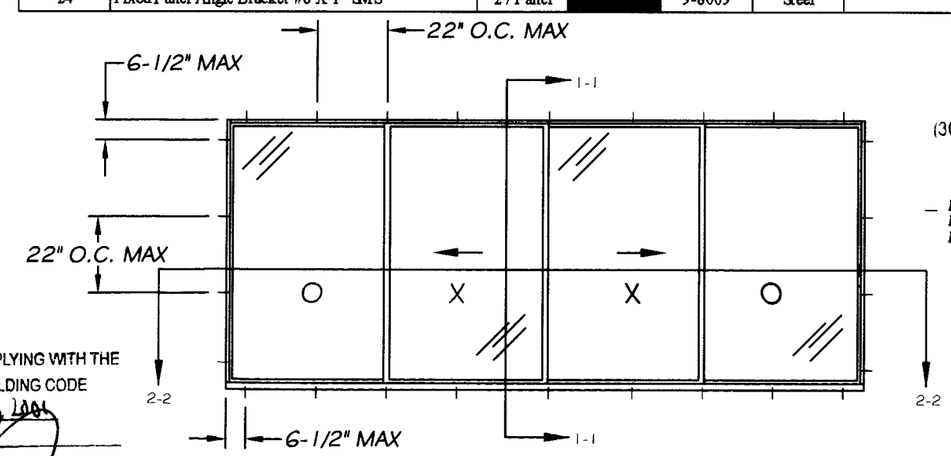


— DENOTES FACTORY DRILL INSTALLATION HOLES. (DOUBLE ROW)

PA-09 SGD ELEVATION

ROBT. E. FISHER
WM. M. MEYERS, P.E.
Consulting Engineers
9301 N.E. 6th Ave. C-300
Miami Shores, FL 33138
(305) 758-3117 557-4006 Fax 362-6282

FLA. 18755
STRUCTURAL
Date: 11/05/01

APPROVED AS COMPLYING WITH THE SOUTH FLORIDA BUILDING CODE
DATE December 6, 2001
BY
PRODUCT CONTROL DIVISION
BUILDING CODE COMPLIANCE OFFICE
ACCEPTANCE NO 01-1018.04

NOTES:

1) 1X BUCK SHOWN. 2X PT BUCK PERMISSIBLE WITH #10 SMS MIN 1-1/4" EMBEDMENT.
2) OXXO CONFIGURATION SHOWN. APPLIES TO OOXX, XXOO, OXXO, OX, XO, OXX XXO,XX
3) SEE PAGE PA-09-DC-06 FOR DESIGN PRESSURES

1 VERTICAL SECTION PA-09 SGD
HALF SCALE

Revision Notes:
A- Design Pressures Revised

BINNINGS PAN AMERICAN
AN AMERICAN ARCHITECTURAL PRODUCTS CORP. COMPANY

3000 N.W. 125th STREET
Miami, Florida 33167
(305)681-0045

| Draw Class: | Part Class: | Prod Category: | Series/Model: | Item: | Sheet: |
|---|---|---|---|---|---|
| ASSY | DC | SGD | PA-09 | N/A | 5 OF 6 |

Engineer: William Myers
Drawn By: TLB — Date Drawn: 10/26/96
Revised By: B.B. — Date Revised: 10/12/01

PA-9 SLIDING GLASS DOOR MODEL 'C'
VERTICAL CROSS SECTION

Part Number: N/A
Drawing Number: PA-09-DC-05
Revision Level: A

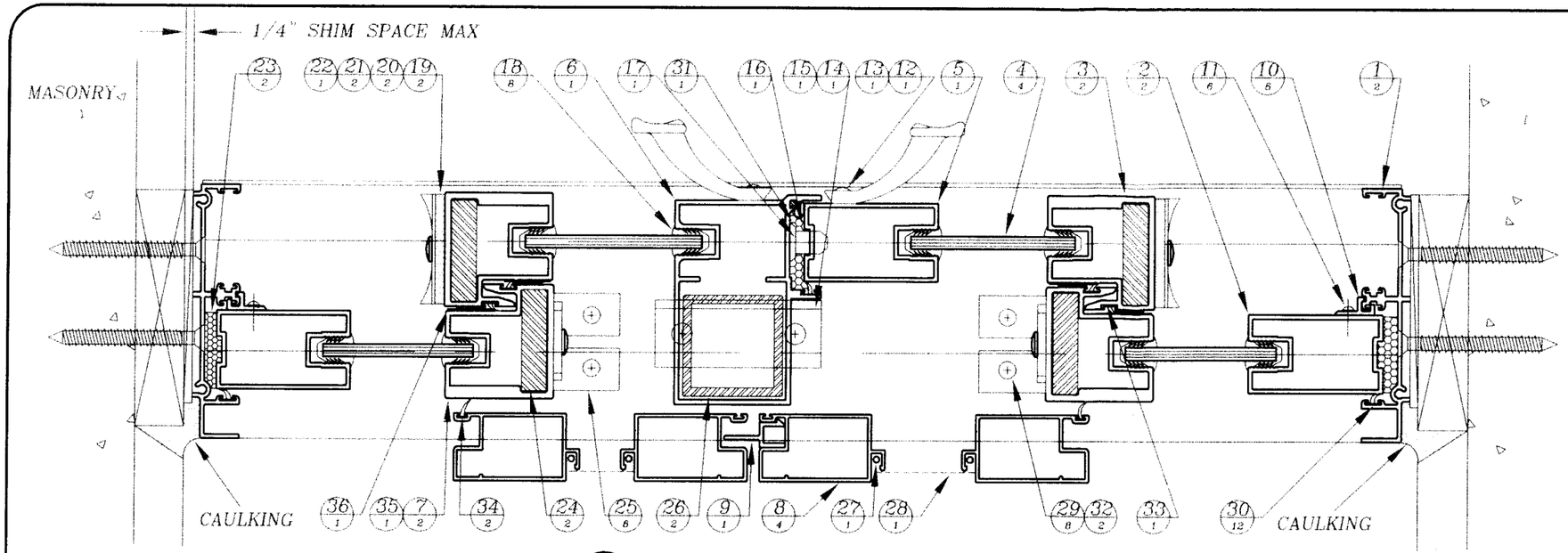


## 2 HORIZONTAL SECTION PA-09 SGD

HALF SCALE

**Model C Design Pressures (Comparative Analysis)**

| Door Height | Panel Width | + DP | - DP |
|---|---|---|---|
| 80 | 24 | 63.00 | -63.00 |
| 80 | 28 | 69.33 | -128.44 |
| 80 | 30 | 69.33 | -113.70 |
| 80 | 32 | 69.33 | -107.89 |
| 80 | 34 | 69.33 | -102.86 |
| 80 | 36 | 69.33 | -98.48 |
| 80 | 38 | 69.33 | -94.64 |
| 80 | 40 | 69.33 | -86.61 |
| 80 | 42 | 69.33 | -75.01 |
| 80 | 44 | 66.05 | -66.05 |
| 80 | 48 | 63.96 | -63.96 |
| 96 | 24 | 45.52 | -45.52 |
| 96 | 28 | 69.33 | -102.42 |
| 96 | 30 | 69.33 | -90.07 |
| 96 | 32 | 69.33 | -85.17 |
| 96 | 34 | 69.33 | -80.92 |
| 96 | 36 | 69.33 | -77.19 |
| 96 | 38 | 69.33 | -73.90 |
| 96 | 40 | 69.33 | -70.98 |
| 96 | 42 | 68.38 | -68.38 |
| 96 | 44 | 65.50 | -65.50 |
| 96 | 48 | -57.63 | -57.63 |

### Horizontal Section Bill of Material

| Part Number | Item Description | Quantity | Extrusion Number | Part Number | Material | Remarks |
|---|---|---|---|---|---|---|
| 1 | Frame Jamb | 2 / Door | 9-86 | 9-86-1 | 6063 T-5 | |
| 2 | Fixed Panel Side Stile | 2 / Panel | 9-83 | 9-83-1 | 6063 T-5 | |
| 3 | Moving Panel Interlock Stile | 2 / Panel | 9-132 | 9-132-2 | 6063 T-5 | |
| 4 | 3/16" Tempered Glazing | 1 / Panel | | | Glass | |
| 5 | Moving Panel Male lock Stile | 1 / Panel | 9-83 | 9-31-1 | 6063 T-5 | |
| 6 | Moving Panel Female Astragal Stile | 1 / Panel | 9-100 | 9-100-2 | 6063 T-5 | |
| 7 | Fixed Panel Interlock Stile | 1 / Panel | 9-132 | 9-132-2 | 6063 T-5 | |
| 8 | Moving Panel Screen Stile | 2 / Screen | 9-121 | 9-121-1 | 6063 T-5 | |
| 9 | Screen Retainer | 1 / Door | 9-122 | 9-122-1 | 6063 T-5 | |
| 10 | Fixed Panel Retainer Anchor | 3 / Jamb | 9-11 | 9-11-1 | 6063 T-5 | |
| 11 | #6 X 3/8" TEK Screw | 3 / Jamb | | 9-8004 | Steel | |
| 12 | Moving Panel Lock Assembly | 1 / Panel | | 9-6028 | | |
| 13 | Moving panel Lock Assembly Handle | 1 / Panel | | 9-5029 | | |
| 14 | Astragal Stile Angle Bracket | 1 / Panel | 9-143 | | 6063 T-5 | |
| 15 | #10 X 1" SMS | 2 / Door | | 9-8013 | Steel | |
| 16 | Moving Panel Female Astragal Weatherstrip | 1 / Panel | | 03-2003C | Vinyl | |
| 17 | Lock Keeper | 1 / Door | | 16-6002 | 6063 T-5 | |
| 18 | 3/16" Glazing Vinyl | 2 / Panel | | 9-2007 | Vinyl | |
| 19 | Moving Panel Sweep Pad | 1 / Panel | | 9-2025A | | |
| 20 | Moving Panel Sweep Weatherstrip | 1 / Panel | | 9-2015 | Vinyl | |
| 21 | Moving Panel Sweep | 1 / Panel | 9-42A | | 6063 T-5 | |
| 22 | Moving Panel Interlock Stile #8 X 1" SMS | 1 / Panel | | 9-8009 | Steel | |
| 23 | Frame Jamb Foam Pad | 2 / Jamb | | 9-2023 | Foam | |
| 24 | Interlock Stile 3/8" X 1 1/2" Steel Bar | 1 / Stile | | 9-6037 | Steel | |
| 25 | Fixed Panel Angle Bracket | 2 / Panel | 9-141 | | 6063 T-5 | |
| 26 | 1 1/2" X 1 1/2" X 1/8" Steel Tube | 1 / Panel | | 9-6036 | Steel | |
| 27 | Screen Spline | 1 / Screen | 82000 | | Vinyl | |
| 28 | Screen | 1 / Screen | | 18X16 | Fiberglass | |
| 29 | Interlock Stile Angle Bracket #10 X 1 1/2" SMS | 4 / Stile | | 9-8010 | Steel | |
| 30 | Frame Jamb Weatherstrip | 1 / Jamb | | 9-2019 | Vinyl | |
| 31 | Astragal Foam Pad | 1 / Panel | | 9-2023 | Foam | |
| 32 | Fixed Panel Interlock Stile Angle Bracket #8 X 7/8" SMS | 2 / Stile | | 9-8001 | Steel | |
| 33 | Interlock Stile Weatherstrip | 1 / Stile | | 9-2019 | Vinyl | |
| 34 | Screen Stile Weatherstrip | 2 / Screen | | 9-2019 | Vinyl | |
| 35 | Intelock Stile Foam Head Pad | 1 / Stile | | 9-2024 | Foam | |
| 36 | Intelock Stile Pile Pad | 1 / Stile | | 9-2026 | Pile | |

NOTES:

1) 1X BUCK SHOWN. 2XPT BUCK PERMISSIBLE WITH #10 SMS MIN 1-1/4" EMBEDMENT.
2) OXXO CONFIGURATION SHOWN. APPLIES TO OOXX, XXOO, OXXO, OX,XO,OXX, XXO, XX.
3) MEETS ASTM E1300


ROBT. E. FISHER
WM. M. MEYERS, P.E.
Consulting Engineers
9301 N.E. 6th Ave. C-300
Miami Shores, FL 33138
(305) 758-3117 557-4006 Fax 362-6282


APPROVED AS COMPLYING WITH THE SOUTH FLORIDA BUILDING CODE
DATE December 6, 2001
BY
PRODUCT CONTROL DIVISION
BUILDING CODE COMPLIANCE OFFICE
ACCEPTANCE NO. 01-1019.04

FLA. 18755
STRUCTURAL
Date: 11/05/01

Revision Notes:
A- Design Pressures Revised

BINNINGS PAN AMERICAN
AN AMERICAN ARCHITECTURAL PRODUCTS CORP. COMPANY

3000 N.W. 125th STREET
Miami, Florida 33167
(305)681-0045

| Draw Class: | Part Class: | Prod Category: | Series/Model: | Item: | Sheet: |
|---|---|---|---|---|---|
| ASSY | DC | SGD | PA-09 | N/A | 6 OF 6 |

Material: William Myers
Drawn By: TLB
Date Drawn: 10/28/98
Revised By: R.R.
Date Revised: 10/12/01

PA-9 SLIDING GLASS DOOR MODEL 'C'
HORIZONTAL CROSS SECTION

Part Number: N/A
Drawing Number: PA-09-DC-06
Revision Level: A