MIAMI-DADE COUNTY, FLORIDA
METRO-DADE FLAGLER BUILDING

BUILDING CODE COMPLIANCE OFFICE
METRO-DADE FLAGLER BUILDING
140 WEST FLAGLER STREET, SUITE 1603
MIAMI, FLORIDA 33130-1563
(305) 375-2901 FAX (305) 375-2908

CONTRACTOR LICENSING SECTION
(305) 375-2527 FAX (305) 375-2558

CONTRACTOR ENFORCEMENT DIVISION
(305) 375-2966 FAX (305) 375-2908

PRODUCT CONTROL DIVISION
(305) 375-2902 FAX (305) 372-6339

PRODUCT CONTROL NOTICE OF ACCEPTANCE

Alcoa Building Products, Inc.
2600 Campbell Rd
Sidney ,OH 45365

Your application for Notice of Acceptance (NOA) of:
Alcoa Alum. V-Grove Soffit
under Chapter 8 of the Code of Miami-Dade County governing the use of Alternate Materials and Types of Construction, and completely described herein, has been recommended for acceptance by the Miami-Dade County Building Code Compliance Office (BCCO) under the conditions specified herein.

This NOA shall not be valid after the expiration date stated below. BCCO reserves the right to secure this product or material at any time from a jobsite or manufacturer's plant for quality control testing. If this product or material fails to perform in the approved manner, BCCO may revoke, modify, or suspend the use of such product or material immediately. BCCO reserves the right to revoke this approval, if it is determined by BCCO that this product or material fails to meet the requirements of the South Florida Building Code.

The expense of such testing will be incurred by the manufacturer.

ACCEPTANCE NO.: 01-1025.03
EXPIRES: 11/16/2006

Raul Rodriguez
Chief Product Control Division

THIS IS THE COVERSHEET, SEE ADDITIONAL PAGES FOR SPECIFIC AND GENERAL CONDITIONS
BUILDING CODE & PRODUCT REVIEW COMMITTEE

This application for Product Approval has been reviewed by the BCCO and approved by the Building Code and Product Review Committee to be used in Miami-Dade County, Florida under the conditions set forth above.

Francisco J. Quintana, R.A.
Director
Miami-Dade County
Building Code Compliance Office

APPROVED: 12/27/2001

Alcoa Building Products.

ACCEPTANCE NO: 01-1025.03

APPROVED: DEC 27 2001

EXPIRES: 11/16/2006

NOTICE OF ACCEPTANCE STANDARD CONDITIONS

1. Renewal of this Acceptance (approval) shall be considered after a renewal application has been filed and the original submitted documentation, including test-supporting data, engineering documents, are no older than eight (8) years.

2. Any and all approved products shall be permanently labeled with the manufacturer's name, city, state, and the following statement: "Miami-Dade County Product Control Approved", or as specifically stated in the specific conditions of this Acceptance.

3. Renewals of Acceptance will not be considered if:
   a) There has been a change in the South Florida Building Code affecting the evaluation of this product and the product is not in compliance with the code changes;
   b) The product is no longer the same product (identical) as the one originally approved;
   c) If the Acceptance holder has not complied with all the requirements of this acceptance, including the correct installation of the product;
   d) The engineer who originally prepared, signed and sealed the required documentation initially submitted is no longer practicing the engineering profession.

4. Any revision or change in the materials, use, and/or manufacture of the product or process shall automatically be cause for termination of this Acceptance, unless prior written approval has been requested (through the filing of a revision application with appropriate fee) and granted by this office.

5. Any of the following shall also be grounds for removal of this Acceptance:
   a) Unsatisfactory performance of this product or process.
   b) Misuse of this Acceptance as an endorsement of any product, for sales, advertising or any other purpose.

6. The Notice of Acceptance number preceded by the words Miami-Dade County, Florida, and followed by the expiration date may be displayed in advertising literature. If any portion of the Notice of Acceptance is displayed, then it shall be done in its entirety.
7. A copy of this Acceptance as well as approved drawings and other documents, where it applies, shall be provided to the user by the manufacturer or its distributors and shall be available for inspection at the job site at all time. The engineer need not reseal the copies.

8. Failure to comply with any section of this Acceptance shall be cause for termination and removal of Acceptance.

9. This Notice of Acceptance consists of pages 1, 2 and this last page 3.

Candido Font PE, Senior Product Control Examiner
Product Control Division

END OF THIS ACCEPTANCE

Alcoa Building Products.

ACCEPTANCE NO: 01-1025.03

APPROVED: DEC 27 2001

EXPIRES: 11/16/2006

NOTICE OF ACCEPTANCE: SPECIFIC CONDITIONS

1. SCOPE

1.1 This renews the Notice of Acceptance No 98-1119.03, which was issued on 04/15/99. It approves Aluminum Soffit as described in Section 2 of this Notice of Acceptance (N.O.A.) designed to comply with the South Florida Building Code 1994 Edition for Miami-Dade County (SFBC). It is approved for the location where the pressure requirements, as determined by the SFBC Chapter 23 do not exceed the design pressure rating values indicated in the approved drawing.

2. PRODUCT DESCRIPTION

2.1 The **Alcoa Aluminum V-Groove Soffit** and its components shall be constructed in strict compliance with the following documents: Drawing No.D-300182 & SK-50-1B, titled "12" V-Groove Soffit Ventilated or 12" V-Groove Non Ventilated" and "Installation Design Drawing for Alum. Soffit", prepared by Alcoa Building Products, dated 12/04/92 and 03/08/99 revised on 03/11/99. They bear the Miami-Dade County Product Control Approval stamp with the Notice of Acceptance number and approval date by the Miami-Dade County Product Control Division. These documents shall hereinafter be referred to as the Approved Drawing.

3. LIMITATIONS

3.1 The soffit is rated at +51.4 psf. and –34.4 psf.

4. INSTALLATION

4.1 The Alcoa Aluminum V-Groove Soffit and its components shall be installed in strict compliance with the approved drawing.

4.2 The installation of this product will not require Hurricane Protection System.

5. LABELING

5.1 Each component shall bear a permanent label with the manufacturer's logo, city, state and the following statement "Miami-Dade County Product Control Approved".

6. BUILDING PERMIT REQUIREMENTS

6.1 Application for Building Permit shall be accompanied by copies of the following:

6.1.1. This Notice of Acceptance, including duplicate copies of the approved drawings, as identified in Section 2 of this N.O.A.

6.1.2 Any other document required by the Building Official or the SFBC in order to properly evaluate the installation of this system.

Candido Font PE, Senior Product Control Examiner
Product Control Division

NAILING PATTERN: 6"O/C ON THE 12" INCH WIDTH DIRECTION
10"O/C ON THE 12' FOOT LONG DIRECTION

NAILS: A-JOINT AREA .12" DIA. SHANK 3/8 DIA. HD. 1 1/2" LONG
B-GROOVE AREA .10" DIA. SHANK 3/16 DIA. HD. 1 1/4" LONG

BATTEN: 2" X 2" P.T. SOUTHERN PINE CONST. GRADE

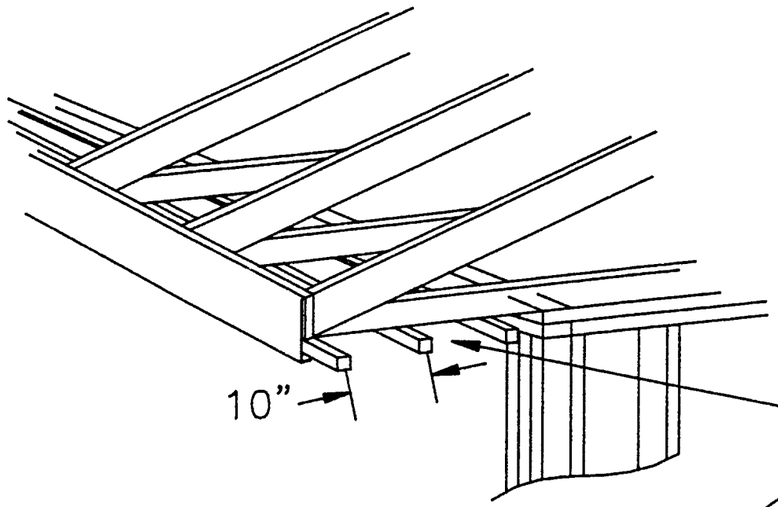

MINIMUM 2"X 2" CONSTRUCTION GRADE
MIXED SOUTHERN PINE OR EQUIV.
WOOD BATTEN STRIPS

NAILS A OR B
SEE FRONT VIEW

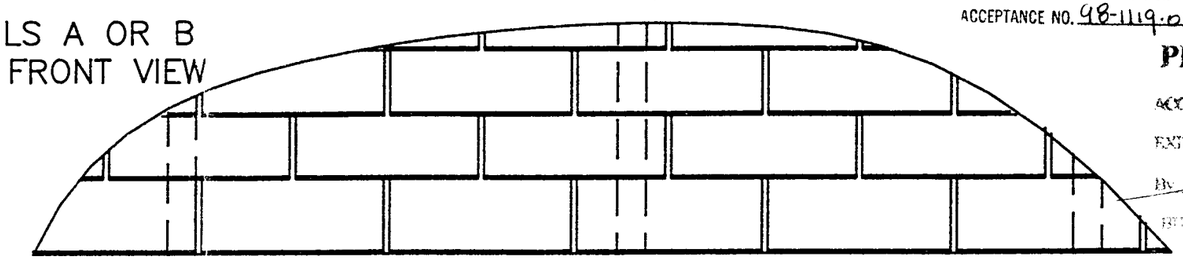

FRONT VIEW OF EAVE WITHOUT FASIA

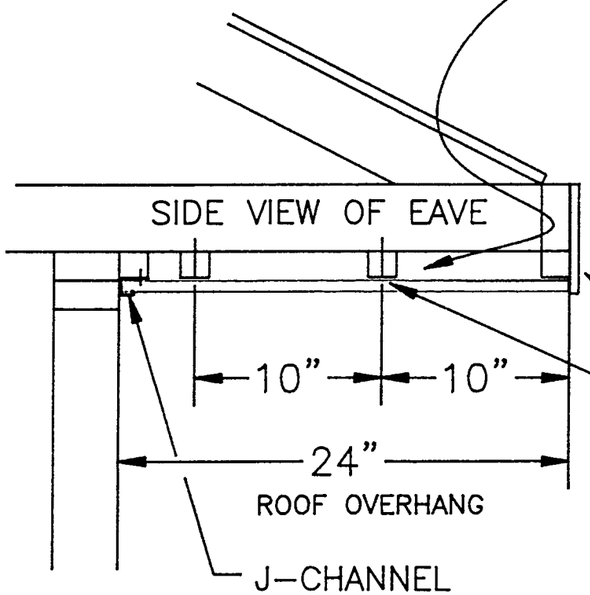

SIDE VIEW OF EAVE

ROOF OVERHANG

J-CHANNEL

FASCIA

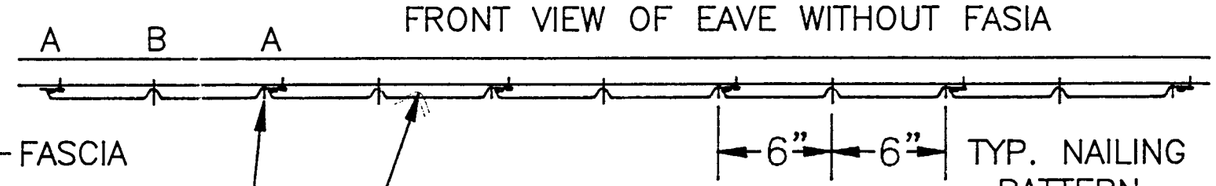

ALUMINIUM SOFFIT PANEL

TYP. NAILING PATTERN 6" X 10"

NAIL: CORROSION RESISTANT NAIL

APPROVED AS COMPLYING WITH THE
SOUTH FLORIDA BUILDING CODE
DATE APRIL 15 1999
BY
PRODUCT CONTROL DIVISION
BUILDING CODE COMPLIANCE OFFICE
ACCEPTANCE NO. 98-1119.03

PRODUCT RENEWED
ACCEPTANCE No. 01-1025.03
EXPIRATION DATE 11/16/2006
BY
PRODUCT CONTROL DIVISION
BUILDING CODE COMPLIANCE OFFICE

RICHARD BOYETTE
FL Civil PE #42485
4031 Coconut Blvd
Royal Palm Bch FL 33411
(561) 795-5766 Voice / Fax

3/15/99

DESIGN PRESSURE RATING
+51.4 PSF. & -34.4 PSF.

No.	Revisions	Date
1	FILE NAME: SK50-1B	3/99

Property of:
Alcoa Building Products
ALCOA

PART: INSTALLATION DESIGN DRAWING FOR ALUM. SOFFIT

DRAWN BY: GAG DATE: 3/8/99
SCALE: 1" = 1"

SK-50-1B

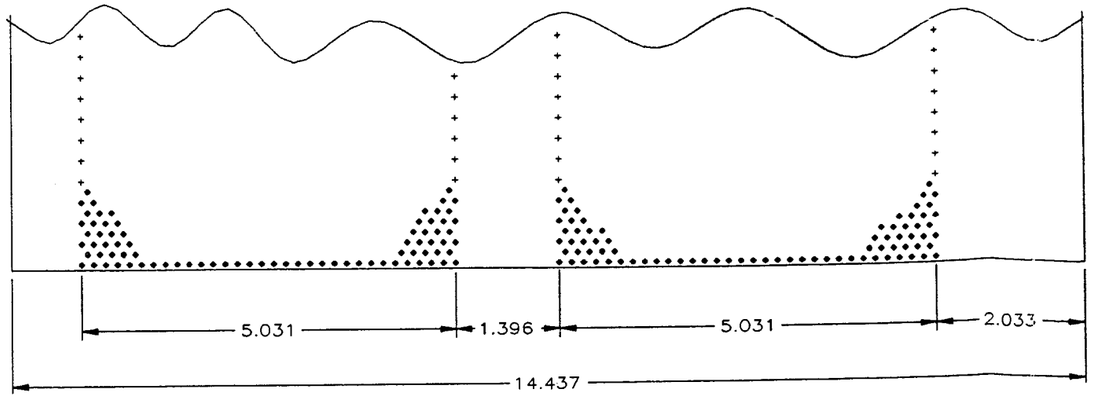

VIEW OF DEVELOPED SHEET

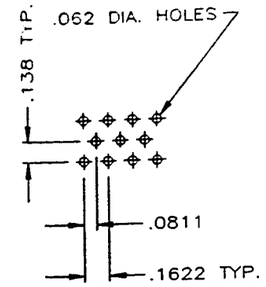

PERFORATION LAYOUT
2 TIMES SCALE

21

NOTES..

1. MATERIAL ALUMINUM ALLOY 3105–H18
2. GAUGE .014 (SVGN420144,SVGV420144)
   .019 (SVG12N20,SVG12N20T,SVG12V20,SVG12V20T)
3. DEVELOPED WIDTH 14.437 +/–.016 .
4. 23 LATEST ALCOA PAINT SPECS TO APPLY ALUMALURE 2000
5. STANDARD TOLERANCES
   DIMENSION +/–.015 , ANGLE +/–1° , RADIUS +/–.005
   UNLESS OTHERWISE SPECIFIED.
6. * TRANSVERSE BOW DOWN – MAX .031.
7. OIL CANNING,BUCKLING,RIPPLES,AND CHATTER CHARACTERISTICS SHALL BE EVALUATED BY A PANEL OF ABP MANAGEMENT USING AN ABP EVALUATION FORM (REF. OIL CAN EVALUATION No. 001).
8. TOOLING MUST BE IN CONTROL AND CAPABLE TO MANUFACTURE THE PART WITHIN ESTABLISHED SPECIFICATION AND TOLERANCES.
9. KEY CHARACTERISTICS ARE NOTED BY (*) ASTERIK – DIMENSIONS TO BE HELD IN CONTROL AND CAPABLE TO A Cpk OF 1.33 OR GREATER.
10. ALL INSIDE RADII TO BE .031 UNLESS OTHERWISE NOTED.
11. 23 DESIGN PRESSURE
    EXTERIOR 51.4 PSF
    INTERIOR 34.4 PSF

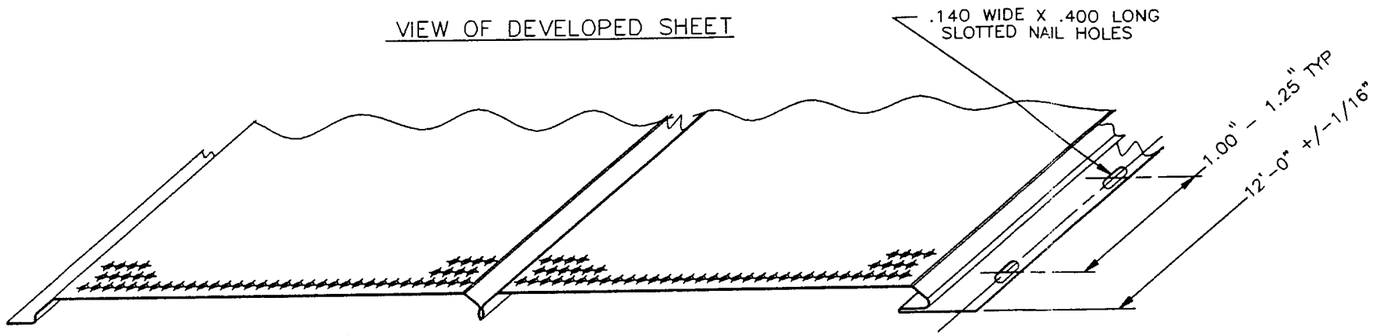

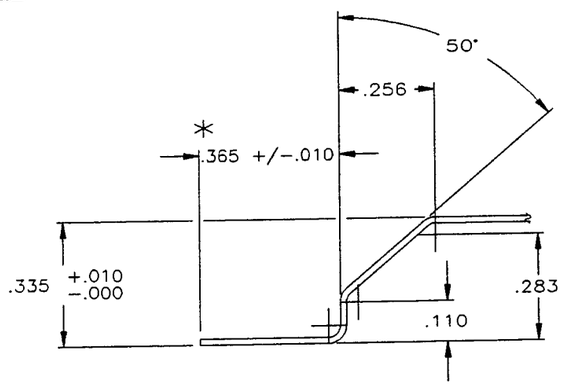

VIEW (A) – 5X SCALE

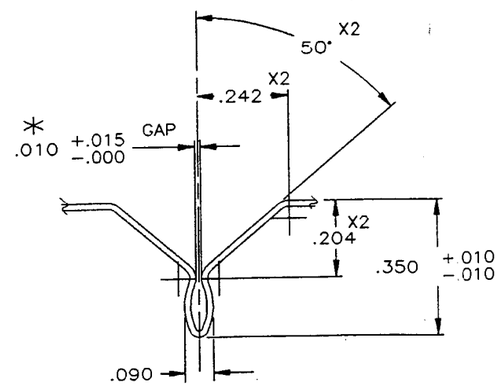

VIEW (B) – 5X SCALE

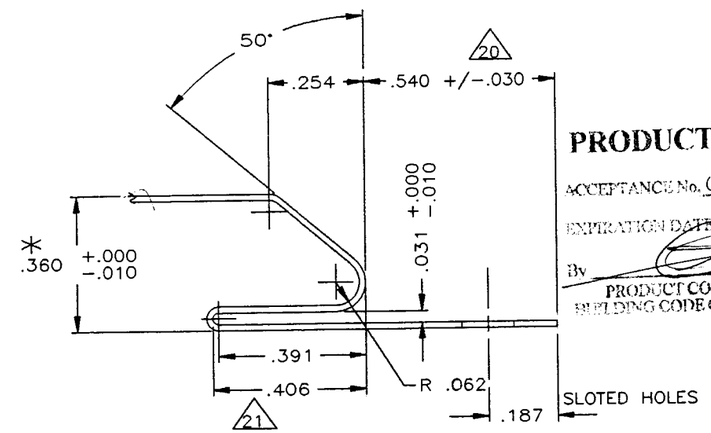

VIEW (C) – 5X SCALE

SUPERSEDES C1201BP (REV. 17)

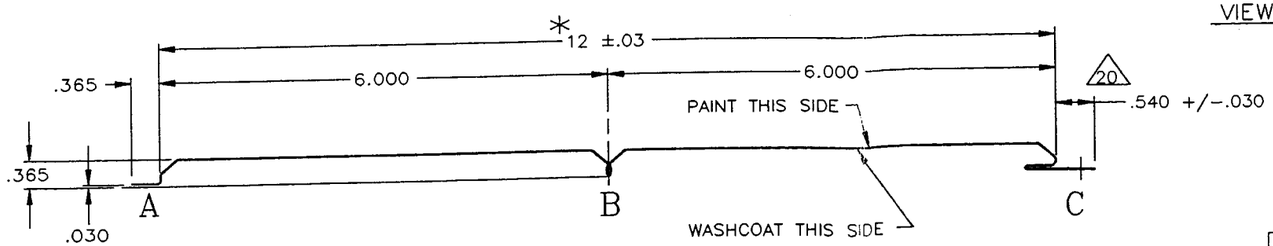

APPROVED AS COMPLYING WITH THE SOUTH FLORIDA BUILDING CODE
DATE APRIL 15 1999
BY
PRODUCT CONTROL DIVISION
BUILDING CODE COMPLIANCE OFFICE
ACCEPTANCE NO. 98-1119.03

PRODUCT RENEWED

ACCEPTANCE No. 01-1025.03
EXPIRATION DATE 11/16/2006
By
PRODUCT CONTROL DIVISION
BUILDING CODE COMPLIANCE OFFICE

RICHARD BOYETTE
FL Civil PE #42485
4031 Coconut Blvd
Royal Palm Bch FL 33411
(561) 790-5766 Voice / Fax

3/13/99

SYM.	ZONE	REVISION	DATE	DRWN BY	CHKD BY	APPD BY
24	–	REMOVE DWG. PROPERTY NOTE	99–3–11	JC	JC	
23	–	CHANGED NOTES 4 & 11	99–2–12	MLB	JC	
22	–	CHANGED NOTES 1,2,4,AND ADDED 11	95–9–13	JC	AB	AB
21	–	REMOVED ASTERIK FROM .406 DIM.	94–8–24	JC	AB	AB
20	–	ADDED .510 WAS .625	94–8–12	JC	AB	AB
19	–	RELEASED FOR PRODUCTION	93–1–12	JC		
18	–	REVISED AND REDRAWN	92–12–4	JC		

TOOL DIMENSIONS MARKED X ARE FOR CONSTRUCTION PURPOSES ONLY FIT AT ASSEMBLY

FINISH NOT SPECIFIED TO BE RMS SEE NOTE #4

TOLERANCES UNLESS OTHERWISE SPECIFIED
FRACTIONS +/– .015
2 PLACE DECIMALS +/– .015
3 PLACE DECIMALS +/– .005
4 PLACE DECIMALS +/– .0002
ANGLES

mm TOLERANCES
X.X +/– .4
X.XX +/–.13
X.XXX +/–.005

THIS DRAWING AND ANY REVISIONS DATED IN ACCORDANCE WITH I.S.O. 2014 (YEAR–MONTH–DAY)

ALL SHARP EDGES MUST BE BROKEN 0.02 R. UNLESS OTHERWISE SPECIFIED

STAMP DRAWING NO. AND REVISION SYMBOL ON EACH PART

DO NOT SCALE DRAWING

VENDOR OR TOOL SOURCE MUST NOT DEVIATE FROM THIS DRAWING WITHOUT THE APPROVAL OF THE ENGINEERING DEPT.

ALCOA BUILDING PRODUCTS
ALUMINUM OPERATIONS
ENGINEERING DEPT.
SIDNEY OHIO

TITLE 12" V–GROOVE SOFFIT VENTILATED
OR 12" V–GROOVE NON–VENTILATED

DRAWN BY	DATE	SCALE
JC	12–04–92	FULL
CHECKED BY	DATE	DRAWING NO.
APPROVED BY	DATE	D–300182