MIAMI-DADE COUNTY, FLORIDA
METRO-DADE FLAGLER BUILDING

BUILDING CODE COMPLIANCE OFFICE
METRO-DADE FLAGLER BUILDING
140 WEST FLAGLER STREET, SUITE 1603
MIAMI, FLORIDA 33130-1563
(305) 375-2901 FAX (305) 375-2908

CONTRACTOR LICENSING SECTION
(305) 375-2527 FAX (305) 375-2558

CONTRACTOR ENFORCEMENT DIVISION
(305) 375-2966 FAX (305) 375-2908

PRODUCT CONTROL DIVISION
(305) 375-2902 FAX (305) 372-6339

PRODUCT CONTROL NOTICE OF ACCEPTANCE

Westshore Glass Corporation
5300 W. Knox St. P.O. Box 15216
Tampa ,FL 33684-5216

Your application for Notice of Acceptance (NOA) of:
Supane 4500 Series Flush Glazed
under Chapter 8 of the Code of Miami-Dade County governing the use of Alternate Materials and Types of Construction, and completely described herein, has been recommended for acceptance by the Miami-Dade County Building Code Compliance Office (BCCO) under the conditions specified herein.

This NOA shall not be valid after the expiration date stated below. BCCO reserves the right to secure this product or material at any time from a jobsite or manufacturer's plant for quality control testing. If this product or material fails to perform in the approved manner, BCCO may revoke, modify, or suspend the use of such product or material immediately. BCCO reserves the right to revoke this approval, if it is determined by BCCO that this product or material fails to meet the requirements of the South Florida Building Code.

The expense of such testing will be incurred by the manufacturer.

ACCEPTANCE NO.: 01-1026.03
EXPIRES: 11/16/2006

Raul Rodriguez
Chief Product Control Division

THIS IS THE COVERSHEET, SEE ADDITIONAL PAGES FOR SPECIFIC AND GENERAL CONDITIONS
BUILDING CODE & PRODUCT REVIEW COMMITTEE

This application for Product Approval has been reviewed by the BCCO and approved by the Building Code and Product Review Committee to be used in Miami-Dade County, Florida under the conditions set forth above.

Francisco J. Quintana, R.A.
Director
Miami-Dade County
Building Code Compliance Office

APPROVED: 12/27/2001

NOTICE OF ACCEPTANCE: SPECIFIC CONDITIONS

1. SCOPE

1.1 This **renews** Notice of Acceptance (NOA) No. **98-0511.01**, which was issued on November 05, 1998. It renews the approval of a commercial steel door, as described in Section 2 of this NOA, designed to comply with the South Florida Building Code (SFBC), 1994 Edition for Miami-Dade County, for the locations where the pressure requirements, as determined by SFBC Chapter 23, do not exceed the Design Pressure Rating values indicated in the approved drawings.

2. PRODUCT DESCRIPTION

2.1 The **Series "Sunpane 4500" Flush Glazed Aluminum Storefront System** and its components shall be constructed in strict compliance with the following document: Drawing No **98-4500**, Sheets 1 through 4 of 4, titled "Metro Dade Flagler Building," prepared by manufacturer, dated 7/22/98 and revised on 10/6/98, bearing the Miami-Dade County Product Control renewal stamp with the NOA number and expiration date by the Miami-Dade County Product Control Division. This document shall hereinafter be referred to as the approved drawings.

3. LIMITATIONS

3.1 This approval applies to multiple unit applications of an aluminum storefront system, limited only to the maximum height (span) and mullion spacing and for the Design Pressure Rating, as shown approved drawing.

4. INSTALLATION

4.1 The flush glazed aluminum storefront system and its components shall be installed in strict compliance with the approved drawings.

4.2 The installation of this product **will require** a hurricane protection system.

5. LABELING

5.1 Each unit shall bear a permanent label with the manufacturer's name or logo, city, state and following statement: "Miami-Dade County Product Control Approved".

6. BUILDING PERMIT REQUIREMENTS

6.1 Application for building permit shall be accompanied by copies of the following:

6.1.1 This Notice of Acceptance

6.1.2 Duplicate copies of the approved drawings, as identified in Section 2 of this Notice of Acceptance, clearly marked to show the components selected for the proposed installation.

6.1.3 Any other documents required by the Building Official or the South Florida Building Code (SFBC) in order to properly evaluate the installation of this system.

Raul Rodriguez, Chief
Product Control Division

Westshore Glass Corporation **ACCEPTANCE No.: 01-1026.03**

APPROVED: December 27, 2001

EXPIRES: November 16, 2006

NOTICE OF ACCEPTANCE: STANDARD CONDITIONS

1. Renewal of this Acceptance (approval) shall be considered after a renewal application has been filed and the original submitted documentation, including test supporting data, engineering documents, are no older than eight (8) years.

2. Any and all approved products shall be permanently labeled with the manufacturer's name, city, state, and the following statement: "Miami-Dade County Product Control Approved", or as specifically stated in the specific conditions of this Acceptance.

3. Renewals of Acceptance will not be considered if:
   a) There has been a change in the South Florida Building Code affecting the evaluation of this product and the product is not in compliance with the code changes;
   b) The product is no longer the same product (identical) as the one originally approved;
   c) If the Acceptance holder has not complied with all the requirements of this acceptance, including the correct installation of the product;
   d) The engineer who originally prepared, signed and sealed the required documentation initially submitted is no longer practicing the engineering profession.

4. Any revision or change in the materials, use, and/or manufacture of the product or process shall automatically be cause for termination of this Acceptance, unless prior written approval has been requested (through the filing of a revision application with appropriate fee) and granted by this office.

5. Any of the following shall also be grounds for removal of this Acceptance:
   a) Unsatisfactory performance of this product or process.
   b) Misuse of this Acceptance as an endorsement of any product, for sales, advertising or any other purpose.

6. The Notice of Acceptance number preceded by the words Miami-Dade County, Florida, and followed by the expiration date may be displayed in advertising literature. If any portion of the Notice of Acceptance is displayed, then it shall be done in its entirety.

7. A copy of this Acceptance as well as approved drawings and other documents, where it applies, shall be provided to the user by the manufacturer or its distributors and shall be available for inspection at the job site at all time. The engineer need not reseal the copies.

8. Failure to comply with any section of this Acceptance shall be cause for termination and removal of Acceptance.

9. This Notice of Acceptance consists of pages 1, 2 and this last page 3.

END OF THIS ACCEPTANCE

Raul Rodriguez, Chief
Product Control Division

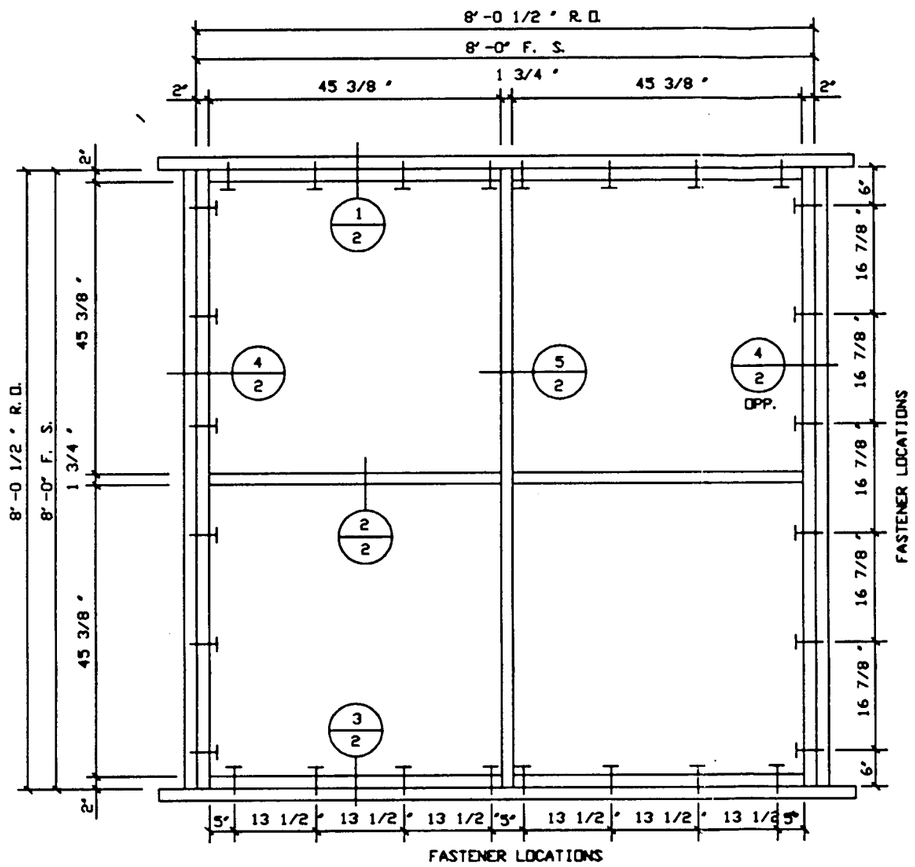

TEST PRESSURES

UNIFORM STATIC PRESS. FULL TEST LOAD (PA 202-94) POS. +82.5 PSF
UNIFORM STATIC PRESS. FULL TEST LOAD (PA 202-94) NEG. -82.5 PSF

DESIGN PRESSURES

DESIGN PRESSURE RATING (POSITIVE) +55 PSF
DESIGN PRESSURE RATING (NEGATIVE) -55 PSF

NOTES

FRAME: SUNPANE SERIES 4500 FLUSH GLAZED SYSTEM

GLASS: 1/4" TEMPERED CLEAR

ALUM. FINISH: CLEAR ANODIZED

MATERIAL: EXTRUDED ALUMINUM (6063) ALLOY, (T5) TEMPER.

INSTALLATION

SCREWS AND METHOD OF ATTACHMENT

HEAD #14 X 2" FHWS LOCATED 5" FROM EACH CORNER AND MULLION, THE REST AT 13 1/2" o.c.

SILL #14 X 2" FHWS LOCATED 5" FROM EACH CORNER AND MULLION, THE REST AT 13 1/2" o.c.

JAMBS #14 X 2" FHWS LOCATED 6" FROM EACH CORNER AND 16 7/8" o.c.

WESTSHORE GLASS CORP.		
METRO-DADE FLAGLER BUILDING		
SCALE: 1/2"=1'-0"	APPROVED BY:	DRAWN BY: M. A. V.
DATE: 7/22/98		REVISED: 10/6/98
DRAWING NUMBER 98-4500		
CONTRACTOR		SHEET NUMBER 1 OF 4

PRODUCT RENEWED

ACCEPTANCE No. 01-1026.03

EXPIRATION DATE November 16, 2006

By

PRODUCT CONTROL DIVISION
BUILDING CODE COMPLIANCE OFFICE

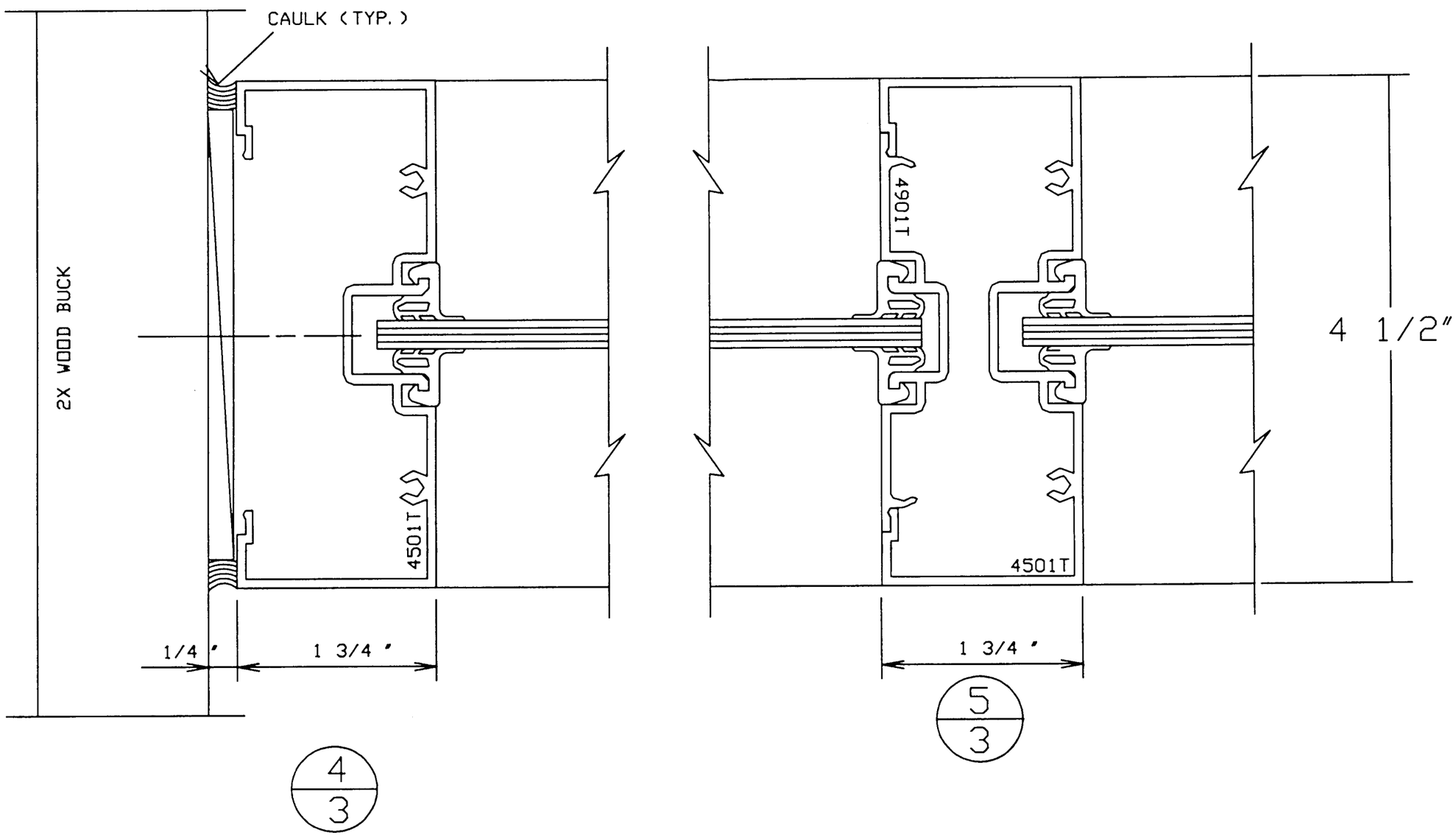

WESTSHORE GLASS CORP.		
METRO-DADE FLAGLER BUILDING		
SCALE: FULL	APPROVED BY:	DRAWN BY: M. A. V.
DATE: 7/22/98		REVISED: 10/6/98
DRAWING NUMBER 98-4500		
CONTRACTOR		SHEET NUMBER 2 OF 4

PRODUCT RENEWED

ACCEPTANCE No. 01-1026.03

EXPIRATION DATE November 16, 2006

By

PRODUCT CONTROL DIVISION
BUILDING CODE COMPLIANCE OFFICE

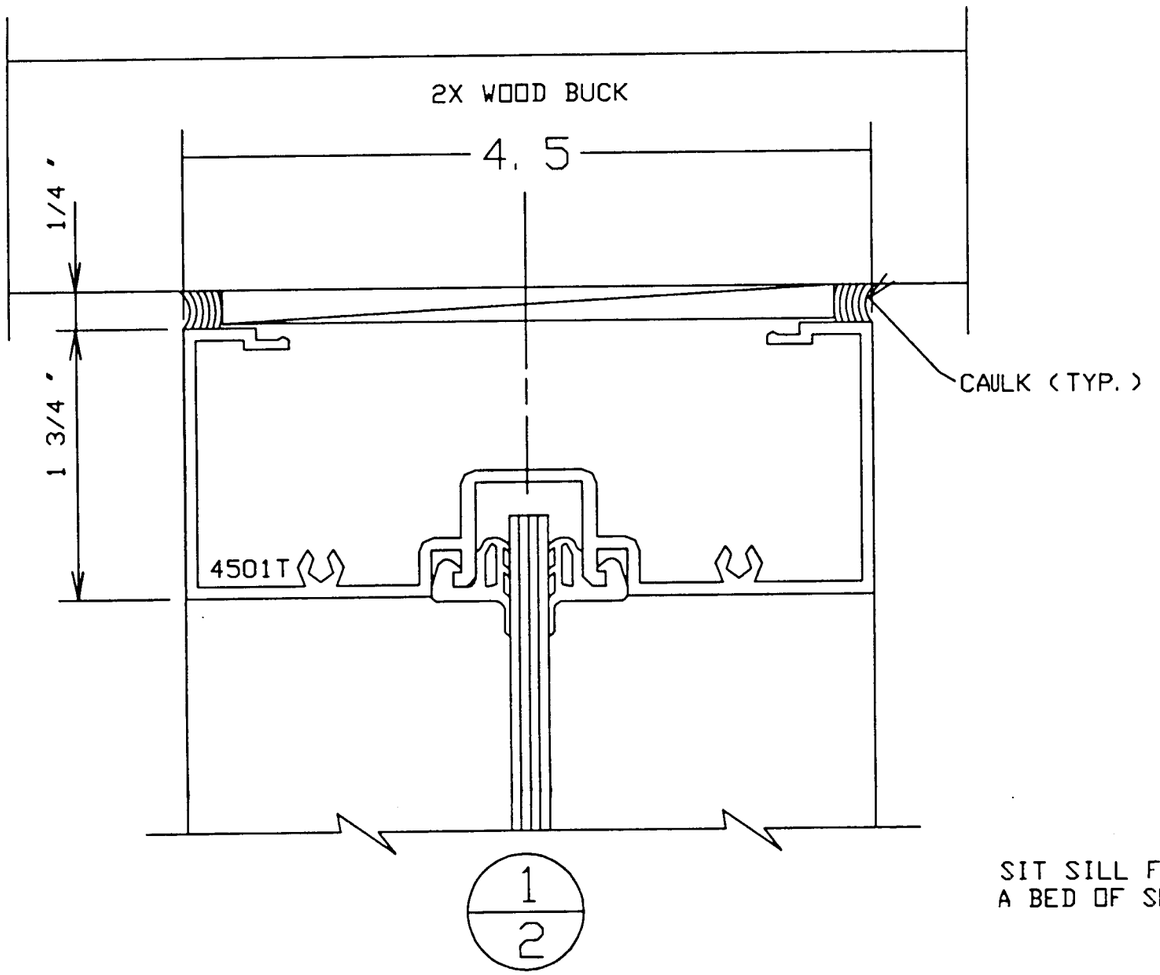

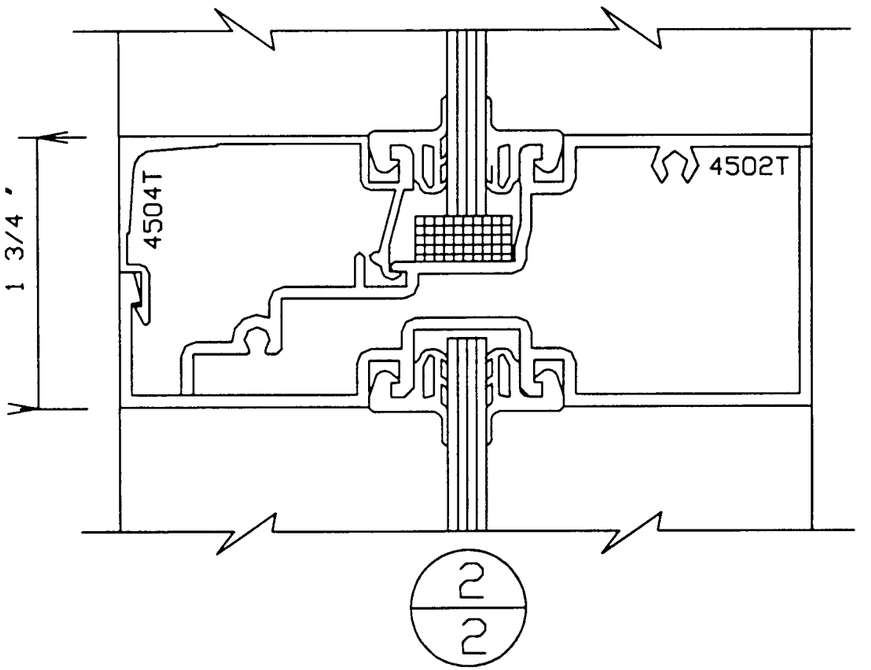

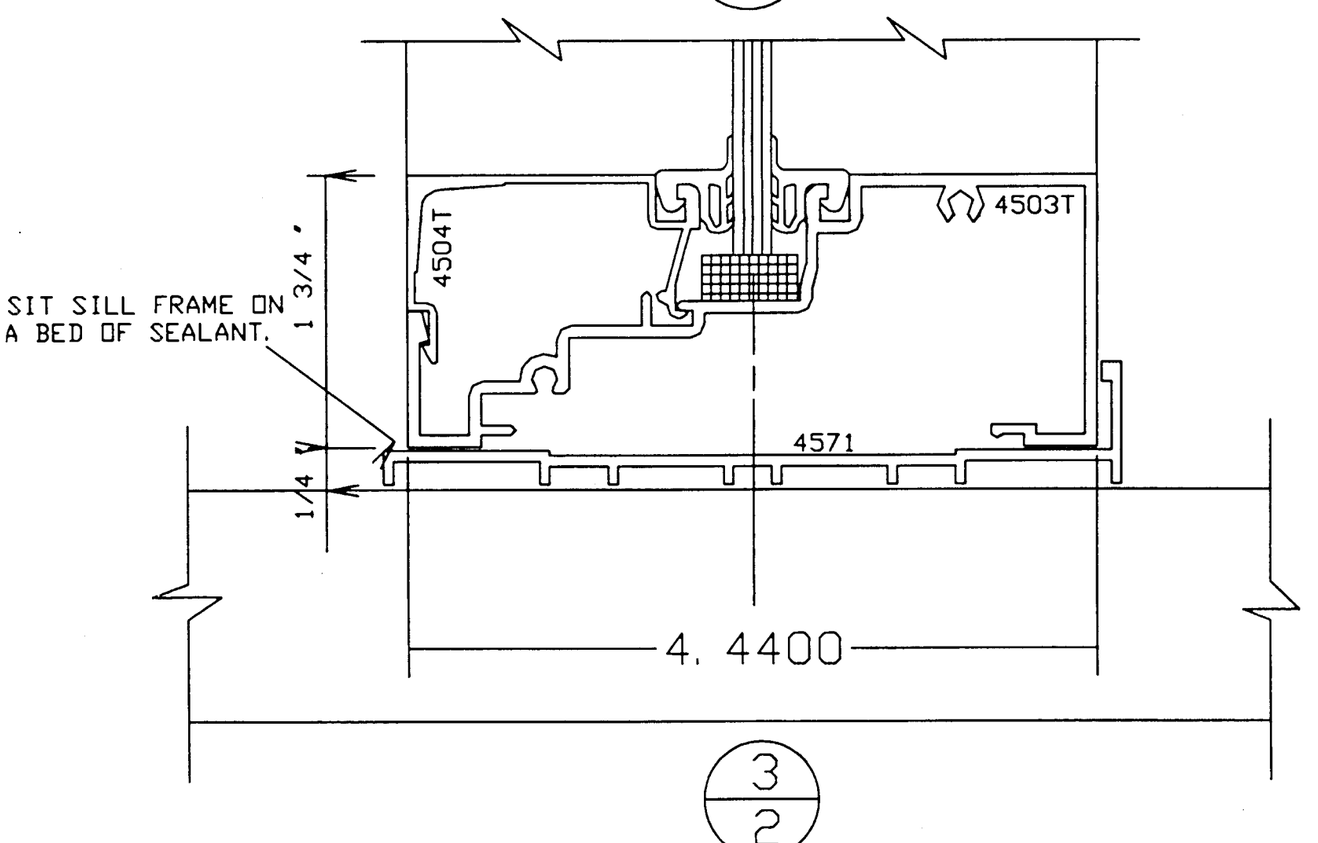

WESTSHORE GLASS CORP.		
METRO-DADE FLAGLER BUILDING		
SCALE: FULL	APPROVED BY:	DRAWN BY: M. A. V.
DATE: 7/22/98		REVISED: 10/6/98
DRAWING NUMBER 98-4500		
CONTRACTOR		SHEET NUMBER 3 OF 4

PRODUCT RENEWED

ACCEPTANCE No. 01-1026.03

EXPIRATION DATE November 16, 2006

By _____

PRODUCT CONTROL DIVISION
BUILDING CODE COMPLIANCE OFFICE

BILL OF MATERIAL

4501T-CL HEAD/JAMB/MULL
3 PCS @ 96"
2 PCS @ 45 3/8"

4901T-CL POCKET FILLER
1 PCS @ 96"

4502T-CL HORIZONTAL
2 PCS @ 45 3/8"

4503T-CL SILL
2 PCS @ 45 3/8"

4504T-CL GLASS STOP
4 PCS @ 45 11/32"

4571-CL PERIMETER
1 PCS @ 96"

ACCESSORIES

6003-AM VINYL FOR 1/4" GLAZING
120 FEET

6005-AM SETTING BLOCKS
8 EACH

6008-AM SPLINE SCREWS #10 X 1"
24 EACH

40572-50 WATER DEFLECTOR
8 EACH

23183-50 #14 X 2" FHWS
28 EACH

4 LITES 46" X 46" 1/4" CLEAR TEMPERED

WESTSHORE GLASS CORP.		
METRO-DADE FLAGLER BUILDING		
SCALE: 1/2 "=1'-0"	APPROVED BY:	DRAWN BY: M. A. V.
DATE: 7/22/98		REVISED: 10/6/98
DRAWING NUMBER 98-4500		
CONTRACTOR		SHEET NUMBER 4 OF 4

PRODUCT RENEWED
ACCEPTANCE No. 01-1026.03
EXPIRATION DATE November 16, 2006
By
PRODUCT CONTROL DIVISION
BUILDING CODE COMPLIANCE OFFICE