MIAMI-DADE

MIAMI-DADE COUNTY, FLORIDA
METRO-DADE FLAGLER BUILDING

BUILDING CODE COMPLIANCE OFFICE
METRO-DADE FLAGLER BUILDING
140 WEST FLAGLER STREET, SUITE 1603
MIAMI, FLORIDA 33130-1563
(305) 375-2901 FAX (305) 375-2908

CONTRACTOR LICENSING SECTION
(305) 375-2527 FAX (305) 375-2558

CONTRACTOR ENFORCEMENT DIVISION
(305) 375-2966 FAX (305) 375-2908

PRODUCT CONTROL DIVISION
(305) 375-2902 FAX (305) 372-6339

PRODUCT CONTROL NOTICE OF ACCEPTANCE

Alutech United, Inc.
15 Dixon Street
Shelbyville ,DE 19975

Your application for Notice of Acceptance (NOA) of:
40mm Roll-Up
under Chapter 8 of the Code of Miami-Dade County governing the use of Alternate Materials and Types of Construction, and completely described herein, has been recommended for acceptance by the Miami-Dade County Building Code Compliance Office (BCCO) under the conditions specified herein.

This NOA shall not be valid after the expiration date stated below. BCCO reserves the right to secure this product or material at any time from a jobsite or manufacturer's plant for quality control testing. If this product or material fails to perform in the approved manner, BCCO may revoke, modify, or suspend the use of such product or material immediately. BCCO reserves the right to revoke this approval, if it is determined by BCCO that this product or material fails to meet the requirements of the South Florida Building Code.

The expense of such testing will be incurred by the manufacturer.

ACCEPTANCE NO.: 01-1115.04
EXPIRES: 02/14/2006

Raul Rodriguez
Chief Product Control Division

THIS IS THE COVERSHEET, SEE ADDITIONAL PAGES FOR SPECIFIC AND GENERAL CONDITIONS
BUILDING CODE & PRODUCT REVIEW COMMITTEE

This application for Product Approval has been reviewed by the BCCO and approved by the Building Code and Product Review Committee to be used in Miami-Dade County, Florida under the conditions set forth above.

Francisco J. Quintana, R.A.
Director
Miami-Dade County
Building Code Compliance Office

APPROVED: 02/14/2002

Alutech United, Inc.

ACCEPTANCE NO: 01-1115.04

APPROVED: FEB 14 2002

EXPIRES: FEB 14 2006

NOTICE OF ACCEPTANCE: SPECIFIC CONDITIONS

1 SCOPE:

1.1 This approves an extruded aluminum roll-up type shutter, as described in Section 2 of this Notice of Acceptance, designed to comply with the South Florida Building Code, (S.F.B.C.) 1994 Edition for Miami-Dade County. For the locations where the pressure requirements, as determined by S.F.B.C. Chapter 23, do not exceed the design pressure-rating values indicated in the approved drawings.

2 PRODUCT DESCRIPTION:

2.1 The **ASSA/40mm Bertha Roll-Up Shutter** and its components shall be constructed in strict compliance with the following documents: Drawing No. **01-167**, Sheets 1 through 12 including 5A of 12, titled "ASSA/40 mm Bertha Roll-Up Shutter", prepared by Tilteco, Inc., dated 06/14/01, with no revisions. It is signed and sealed by Walter A. Tillit Jr. PE. bearing the Miami-Dade County Product Control approval stamp with the Notice of Acceptance number and approval date. These documents shall herein after be referred to as the approved drawings.

3 LIMITATIONS:

3.1 All permanent set components, included but not limited to embedded anchor bolts, metal shields, headers and sills, must be protected against corrosion, damage and contamination at all times.

3.2 Minimum separation from interior storm bar to existing glass shall be as shown on sheet 9 of 12".

3.3 Minimum slat engagement inside of sidetrack shall be 1-1/4".

3.4 After all members have been selected, check for compliance with section 2303.3(i) of the SFBC.

3.5 Slat orientation shall be concave side to the exterior.

4 INSTALLATION:

4.1 The extruded aluminum roll-up shutter and its component shall be installed in strict compliance with the approved drawing

5 LABELING:

5.1 Each unit shall bear a permanent label with the manufacturer's name or logo, city, state and the following statement: "Miami-Dade County Product Control Approved"

6 BUILDING PERMIT REQUIREMENTS:

6.1 Application for Building Permit shall be accompanied by copies of the following:

- **6.1.1** This Notice of Acceptance
- **6.1.2** Duplicate copies of the approved drawings, as identified in Section 2 of this Notice of Acceptance, clearly marked to show the components selected for the proposed installation.
- **6.1.3** Any other document required by the Building Official or the South Florida Building Code in order to evaluate the installation of this system.

Candido Font, PE. Sr. Product Control Examiner
Product Control Division

Alutech United, Inc.

ACCEPTANCE NO: 01-1115.04

APPROVED: FEB 14 2002

EXPIRES: FEB 14 2006

NOTICE OF ACCEPTANCE: STANDARD CONDITIONS

1 Renewal of this Acceptance (approval) shall be considered after a renewal application has been filed and the original submitted documents, including test-supporting data, engineering documents, are no older than eight (8) years.

2. Any and all approved products shall be permanently labeled with the manufacturer's name, city, state, and the following statement: "Miami-Dade County Product Control Approval", or as specifically stated in the specific conditions of this Acceptance.

3. Renewals of Acceptance will not be considered if:
   a. There has been a change in the South Florida Building Code affecting the evaluation of this product and the product is not in compliance with the code changes.
   b. The product is no longer the same product (identical) as the one originally approved.
   c. If the Acceptance holder has not complied with all the requirements of this acceptance, including the correct installation of the product.
   d. The engineer who originally prepared, signed and sealed the required documentation initially submitted, is no longer practicing the engineering profession.

4. Any revision or change in the materials, use, and/or manufacture of the product or process shall automatically be cause for termination of this Acceptance, unless prior written approval has been requested (through the filing of a revision application with appropriate fee) and granted by this office.

5. Any of the following shall also be grounds for removal of this Acceptance:
   a. Unsatisfactory performance of this product or process.
   b. Misuse of this Acceptance as an endorsement of any product, for sales, advertising or any other purposes.

6. The Notice of Acceptance number preceded by the words Miami-Dade County, Florida, and followed by the expiration date may be displayed in advertising literature. If any portion of the Notice of Acceptance is displayed, then it shall be done in its entirety.

7. A copy of this Acceptance as well as approved drawings and other documents, where it applies, shall be provided to the user by the manufacturer or its distributors and shall be available for inspection at the job site at all time. The engineer need not reseal the copies.

8. Failure to comply with any section of this Acceptance shall be cause for termination and removal of Acceptance.

9. This Notice of Acceptance consists of pages 1, 2 and this last page 3.

Candido Font, PE. Sr. Product Control Examiner
Product Control Division

END OF THIS ACCEPTANCE

Alutech United, Inc.

ACCEPTANCE NO: 01-1115.04

APPROVED: FEB 14 2002

EXPIRES: FEB 14 2006

NOTICE OF ACCEPTANCE: EVIDENCE SUBMITTED:

A. DRAWING

1. Drawing No. 01-167, titled "ASSA/40 mm Bertha Roll-Up ", Sheets 1 through 12 including 5A of 12, prepared by Tilteco, Inc., dated 06/14/01, with no revisions, signed and sealed by W.A. Tillit Jr., PE.

B. TEST

1. Test report on Large Missile Impact Test per PA 201, Cyclic Wind Pressure Test per PA 203 and Uniform Static Air Pressure Test per PA 202, of "Series: 40mm; Aluminum Roll Up Shutter", prepared by Fenestration Testing Laboratory, Inc., Report No. 2749, dated 08/24/2000, signed and sealed by A. P. Gonzalez, PE.
2. Test report on Large Missile Impact Test per PA 201of "Aluminum Storm Bar", prepared by Fenestration Testing Laboratory, Inc., Report No. 2760, dated 08/31/2000, signed and sealed by A. P. Gonzalez, PE.

C. CALCULATIONS

1. Comparative analysis for slats; storm bars, headers and anchors using rational analysis dated 09/14/00, pages 1 through 107 of 107, prepared by Tilteco Inc., signed and sealed by W. A. Tillit Jr., PE.

D. MATERIAL CERTIFICATION

1. Tensile Test Report No. 13974.0001, per ASTM B 557, prepared by ATC Associates, Inc. dated 09/20/00, signed and sealed by S.E. black, PE.

E. STATEMENTS

1. Letter of Code Compliance issued by Tilteco, Inc., on 04/04/2001, signed and sealed by W.
   1. Tillit Jr., PE.
2. No-financial interest letter issued by Tilteco, Inc., on 04/04/2001, signed and sealed by W. A.Tillit Jr., PE.
3. Test compliance letter issued by Fenestration Testing Laboratory, Inc., on 04/30/2001, signed and sealed by A. Acevedo, PE.
4. Test relinquish letter issued by Weather Guard, Inc. on 04/06/2001 and signed by D. D. Thomas.
5. Advise purchase letter issued by ASSA, Inc. on 04/08/2001and signed by W. Feeley.
6. Release letter issued by ASSA Inc. on 07/25/01 signed by T. Kip.
7. Certification of drawing letter issued by Tilteco, Inc. on 11/12/01, signed and sealed by W. A. Tillit Jr. PE.
8. Application letter issued by Alutech United, Inc. on 11/05/01, signed by G. Pfaller,

Candido Font, PE. Sr. Product Control Examiner
Product Control Division

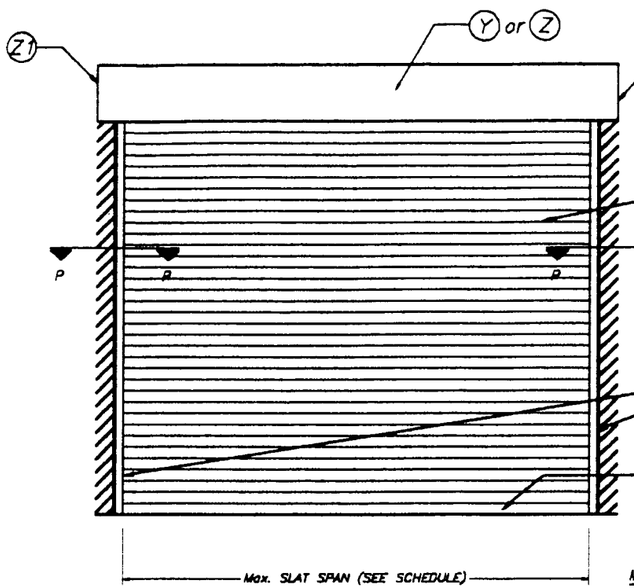

TYPICAL SINGLE UNIT ELEVATION (NO STORM BARS REQUIRED)

NOTE: SEE SHEET 2 & 3 OF 12 FOR COMPONENTS NOMENCLATURE.

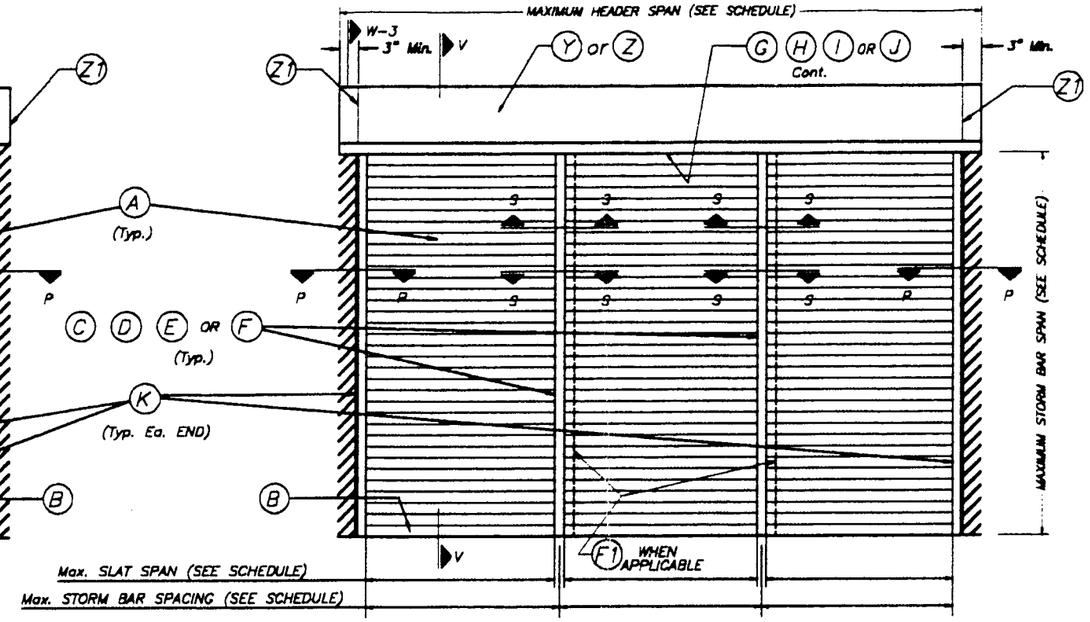

TYPICAL MULTIPLE UNIT ELEVATION (STORM BARS REQUIRED)

NOTE: SEE SHEET 2 & 3 OF 12 FOR COMPONENTS NOMENCLATURE.

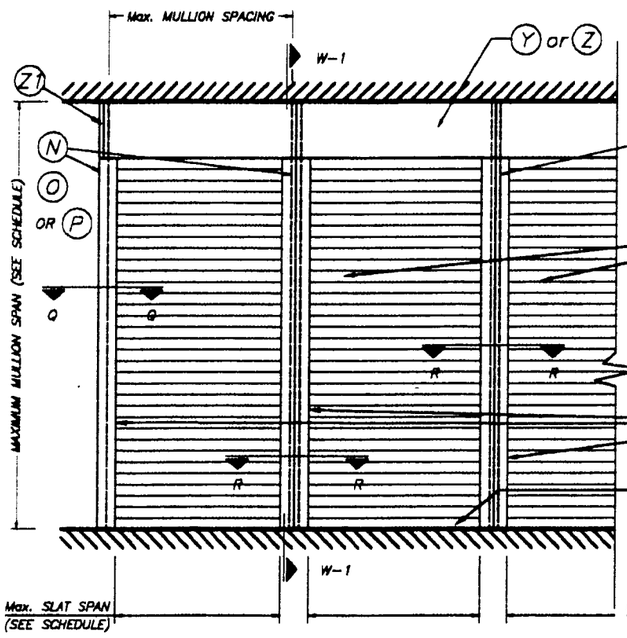

TYPICAL CONSECUTIVE SINGLE UNIT ELEVATION (NO STORM BARS REQUIRED)

NOTE: SEE SHEET 2 & 3 OF 12 FOR COMPONENTS NOMENCLATURE.

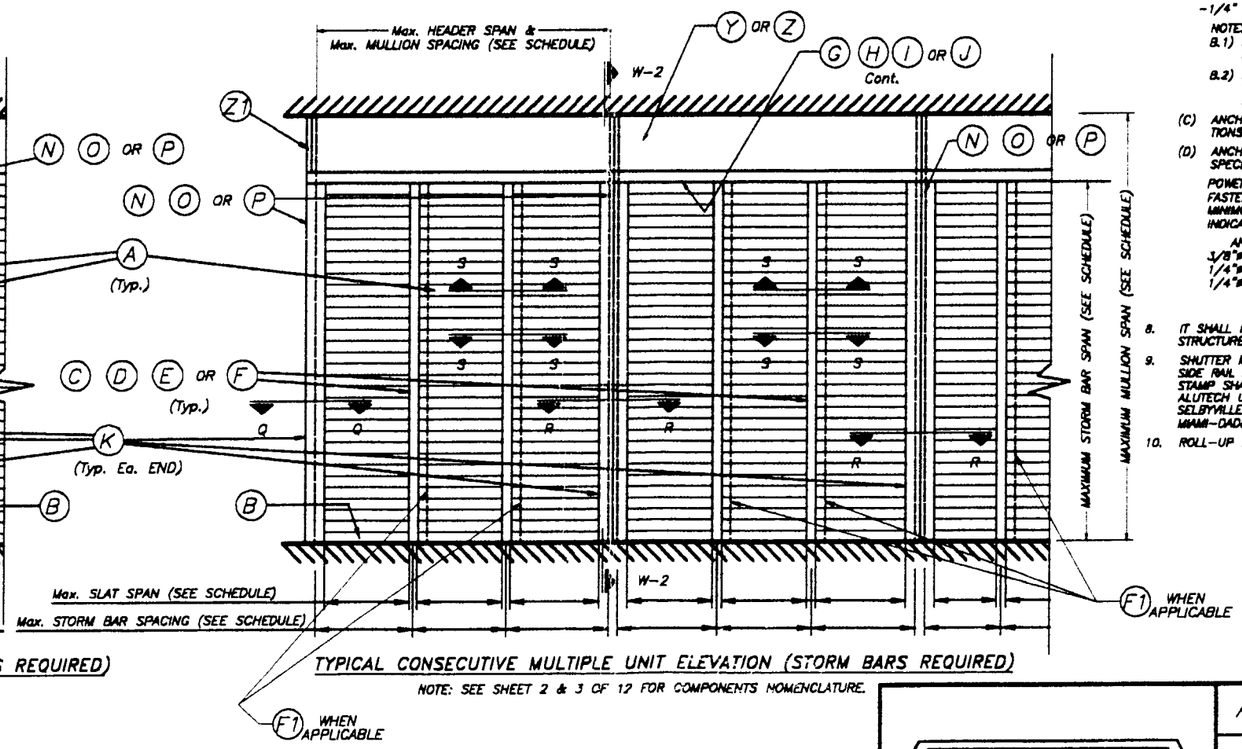

TYPICAL CONSECUTIVE MULTIPLE UNIT ELEVATION (STORM BARS REQUIRED)

NOTE: SEE SHEET 2 & 3 OF 12 FOR COMPONENTS NOMENCLATURE.

NOTE:
SEE SECTIONS ON
SHEETS 4 THRU 7.

GENERAL NOTES:

1. ROLL-UP SHUTTER HAS BEEN DESIGNED IN ACCORDANCE WITH THE 1994 MIAMI-DADE COUNTY EDITION OF THE SOUTH FLORIDA BUILDING CODE.
   DESIGN WIND LOADS SHALL BE AS PER SECTION 6 OF ASCE 7-88, WITH 110 m.p.h. BASIC WIND SPEED.
   ROLL-UP SHUTTER'S ADEQUACY FOR IMPACT AND FATIGUE RESISTANCE HAS BEEN VERIFIED IN ACCORDANCE WITH SECTIONS 2315 & 2314 RESPECTIVELY OF THE ABOVE MENTIONED CODE, AS PER FENESTRATION TESTING LAB. REPORTS #2749 & 2780.
2. ALL ALUMINUM EXTRUSIONS SHALL BE 6063-T6 ALLOY (UNLESS OTHERWISE NOTED).
3. ALL SCREWS TO BE STAINLESS STEEL 304 OR 316 SERIES W/50 ksi YIELD POINT AND 90 ksi TENSILE STRENGTH.
4. BOLTS TO BE 2024-T4 ALUMINUM ALLOY, GALVANIZED OR STAINLESS STEEL WITH 36 ksi MINIMUM YIELD POINT.
5. STORM BARS AT FLOOR OR CEILING MOUNTING INSTALLATIONS MAY BE REMOVABLE AT NON HURRICANE CONDITIONS. HOWEVER, EACH STORM BAR SHALL BEAR A PERMANENT LABEL IN A VISIBLE PLACE WITH A WARNING NOTE INSTRUCTING THE TENANT OR OWNER THAT STORM BARS MUST BE INSTALLED WITH CORRESPONDING HARDWARE DURING PERIODS OF HURRICANE WARNING AND THAT ROLL UP SHUTTERS WILL NOT OFFER HURRICANE PROTECTION UNLESS ALL STORM BARS ARE INSTALLED AS DIRECTED.
6. REMOVABLE STORM BARS SHALL BE STORED IN A CONSPICUOUS PLACE WITH EASY AND IMMEDIATE ACCESS SO THAT THEY CAN BE REACHED AND INSTALLED ANY TIME (HURRICANE CONDITIONS OR NOT) SLATS ARE ROLLED DOWN. THE EFFECT OF THE SLATS ROLLED DOWN WITHOUT STORM BARS IS; THOSE SLATS WILL SLIP OUT OF TRACK DUE TO THE DEFLECTION CAUSED BY WIND FORCES.
7. ANCHORS TO WALL FOR SIDE RAILS & BOX CONNECTION SHALL BE AS FOLLOWS: (UNLESS OTHERWISE NOTED)
   (A) TO EXISTING POURED CONCRETE:
   -1/4" ø TAPCON ANCHORS AS MANUFACTURED BY I.T.W./BUILDEX OR ELCO TEXTRON.
   NOTES:
   A.1) MINIMUM EMBEDMENT OF TAPCON ANCHORS INTO POURED CONCRETE SHALL BE 1 3/4". NO EMBEDMENT INTO STUCCO SHALL BE CONSIDERED AS PART OF THE REQUIRED EMBEDMENT.
   A.2) IN CASE THAT PRECAST STONE, PRECAST CONCRETE PANELS, OR PAVERS BE FOUND ON THE EXISTING WALL OR FLOOR, ANCHORS SHALL BE LONG ENOUGH TO REACH THE MAIN STRUCTURE BEHIND SUCH PANELS.
   (B) TO EXISTING CONCRETE BLOCK WALL:
   -1/4" ø TAPCON ANCHORS, AS MANUFACTURED BY I.T.W./BUILDEX OR ELCO TEXTRON.
   NOTES:
   B.1) MINIMUM EMBEDMENT OF TAPCON ANCHORS, INTO THE CONCRETE BLOCK UNIT SHALL BE 1 1/4".
   B.2) IN CASE THAT PRECAST STONE OR PRECAST CONCRETE PANELS BE FOUND ON THE EXISTING WALL, ANCHORS SHALL BE LONG ENOUGH TO REACH THE MAIN STRUCTURE BEHIND SUCH PANELS.
   (C) ANCHORS SHALL BE INSTALLED FOLLOWING ALL OF THE RECOMMENDATIONS AND SPECIFICATIONS OF THE ANCHOR'S MANUFACTURER.
   (D) ANCHORS REQUIRED FOR STORM BARS, HEADERS & MULLION CONNECTIONS SHALL BE AS SPECIFIED ON APPLICABLE SECTIONS SHOWN ON SHEETS 5, 5A, 6, & 7 OF 12 RESPECTIVELY.
   POWER BOLTS & CALK-IN ANCHORS TO BE AS MANUFACTURED BY POWERS RAWL FASTENING, INC.
   MINIMUM EDGE DISTANCE AND SPACING FOR ABOVE MENTIONED ANCHORS SHALL BE AS INDICATED BELOW OR AT ABOVE MENTIONED SHEETS, WHICHEVER IS LARGER (MORE CRITICAL).

ANCHOR	SPACING	EDGE DISTANCE
3/8"ø POWER BOLT	3 3/4"	4 1/2"
1/4"ø CALK-IN	2 1/2"	3"
1/4"ø TAPCON	3"	2 1/2"

8. IT SHALL BE THE RESPONSIBILITY OF THE CONTRACTOR TO VERIFY THE SOUNDNESS OF THE STRUCTURE WHERE SHUTTER IS TO BE ATTACHED TO INSURE PROPER ANCHORAGE.
9. SHUTTER MANUFACTURER'S STAMP SHALL BE PLACED ON THE EXPOSED SURFACE OF THE SIDE RAIL APPROXIMATELY 4" ABOVE THE BOTTOM OF SUCH RAIL.
   STAMP SHALL READ AS FOLLOWS:
   ALUTECH UNITED, INC.
   SELBYVILLE, DE. 19975
   MIAMI-DADE COUNTY PRODUCT CONTROL APPROVED.
10. ROLL-UP MECHANISM NOT PART OF THIS APPROVAL.

ANCHORS AS CONFORMING WITH THE
SOUTH FLORIDA BUILDING CODE
DATE FEB 14 2002
BY
PRODUCT CONTROL DIVISION
BUILDING CODE COMPLIANCE OFFICE
ACCEPTANCE NO. 01-1115.04

MIAMI-DADE COUNTY

11/9/01

TILTECO INC.
TILLIT TESTING & ENGINEERING COMPANY
6595 N.W. 36th. St., Ste. 217 - VIRGINIA GARDENS, FL 33166
Phone : (305)871-1530 . Fax : (305)871-1531
EB 0006719
WALTER A. TILLIT Jr., P. E.
FLORIDA Lic. # 44167

ASSA/40mm BERTHA ROLL-UP

ALUTECH UNITED, INC.
(ASSA #68)
15 DIXON ST.
SELBYVILLE, DE. 19975

REV. No	DESCRIPTION	DATE	REV. No	DESCRIPTION	DATE
1	-	-	3		
2	-	-	4		

AS SHOWN
SCALE

6/14/01
DATE

01-167
DRAWING No

SHEET 1 OF 12

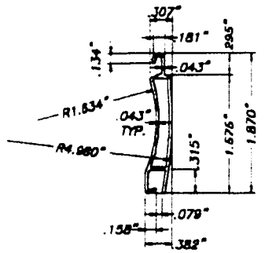

(A) TYPE 1 SLAT:
EXTRUDED ALUMINUM SLAT
6063-T6 ALUMINUM ALLOY
SCALE: 1/2" = 1"

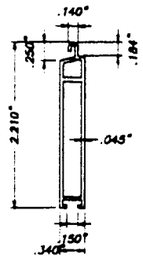

(B) TYPE 2 SLAT:
EXTRUDED ALUMINUM BOTTOM SLAT
6063-T6 ALUMINUM ALLOY
SCALE: 1/2" = 1"

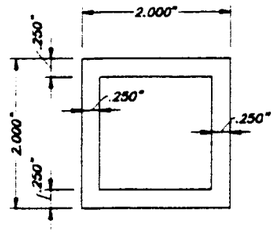

(C) TYPE 1 STORM BAR:
2" EXTRUDED STORM BAR
6063-T6 ALUMINUM ALLOY
SCALE: 1/2" = 1"

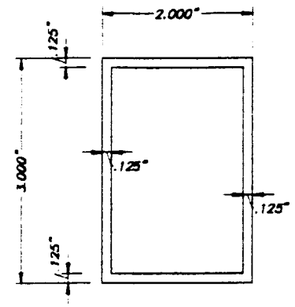

(D) TYPE 2 STORM BAR:
3" EXTRUDED STORM BAR
6063-T6 ALUMINUM ALLOY
SCALE: 1/2" = 1"

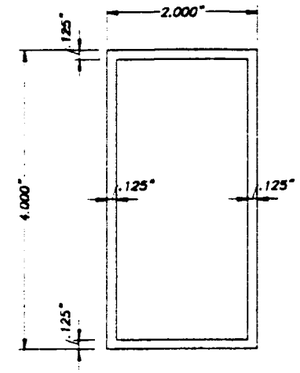

(E) TYPE 3 STORM BAR:
4" EXTRUDED STORM BAR
6063-T6 ALUMINUM ALLOY
SCALE: 1/2" = 1"

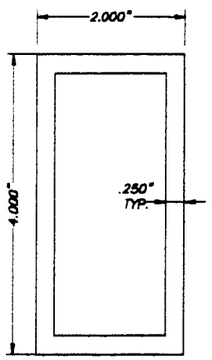

(F) TYPE 4 STORM BAR:
4" HEAVY EXTRUDED STORM BAR
6063-T6 ALUMINUM ALLOY
SCALE: 1/2" = 1"

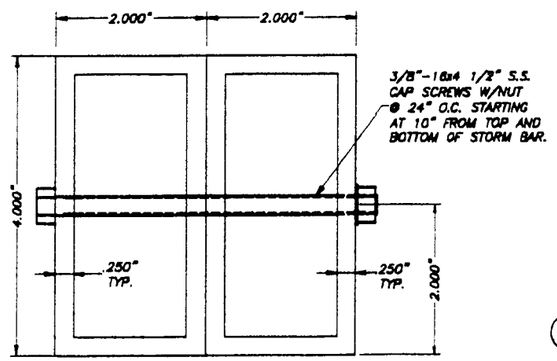

(F1) TYPE 5 STORM BAR:
4" HEAVY EXTRUDED STORM BAR
6063-T6 ALUMINUM ALLOY
SCALE: 1/2" = 1"

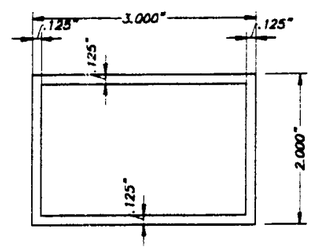

(G) HEADER TYPE 1:
6063-T6 ALUMINUM ALLOY
SCALE: 1/2" = 1"

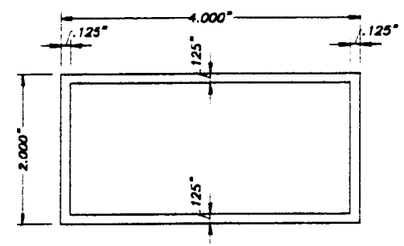

(H) HEADER TYPE 2:
6063-T6 ALUMINUM ALLOY
SCALE: 1/2" = 1"

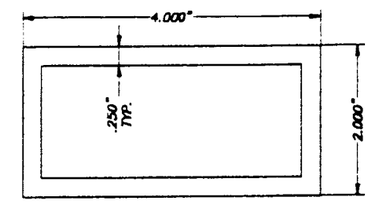

(I) HEADER TYPE 3:
6063-T6 ALUMINUM ALLOY
SCALE: 1/2" = 1"

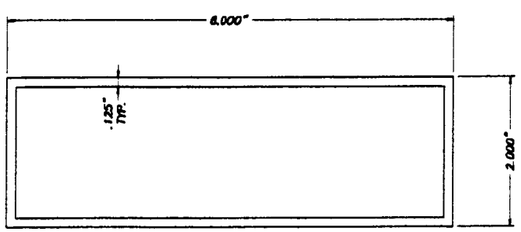

(J) HEADER TYPE 4:
6063-T6 ALUMINUM ALLOY
SCALE: 1/2" = 1"

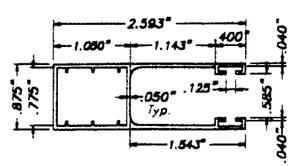

(K) TYPE 1 SIDE RAIL:
6063-T6 Alum. ALLOY
SCALE: 1/2" = 1"

DATE FEB 14 2002
BY
BUILDING CODE COMPLIANCE OFFICE
ACCEPTANCE NO. 01-1115.04
MIAMI-DADE COUNTY

11/9/01

TILTECO INC.
TILLIT TESTING & ENGINEERING COMPANY
6595 N.W. 36th. St., Ste. 217 - VIRGINIA GARDENS, FL 33166
Phone : (305)871-1530 . Fax : (305)871-1531
EB 0006719
WALTER A. TILLIT Jr., P. E.
FLORIDA Lic. # 44167

ASSA/40mm BERTHA ROLL-UP

ALUTECH UNITED, INC.
(ASSA #68)
15 DIXON ST.
SELBYVILLE, DE. 19975

REV. No	DESCRIPTION	DATE	REV. No	DESCRIPTION	DATE
1	-	-	3		
2	-	-	4		

AS SHOWN SCALE
6/14/01 DATE
01-167 DRAWING No
SHEET 2 OF 12

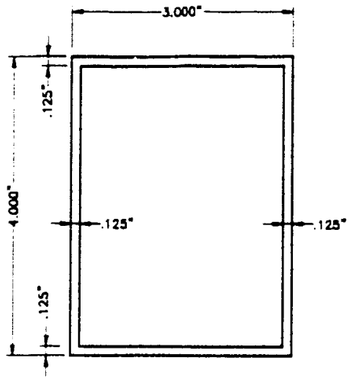

(N) TYPE 1 MULLION:
4" EXTRUDED MULLION
6063-T6 ALUMINUM ALLOY
SCALE: 1/2" = 1"

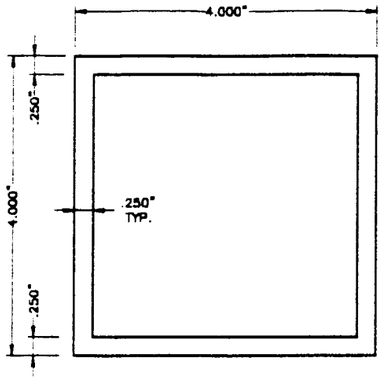

(O) TYPE 2 MULLION:
4" EXTRUDED MULLION
6063-T6 ALUMINUM ALLOY
SCALE: 1/2" = 1"

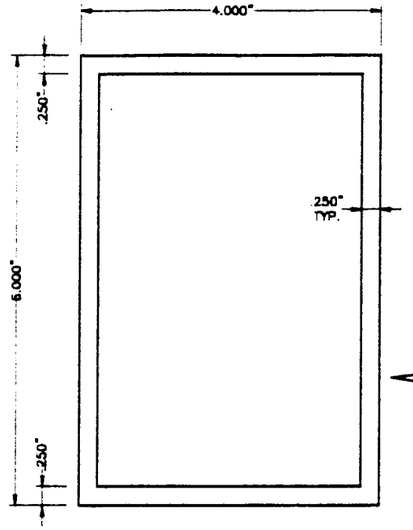

(P) TYPE 3 MULLION:
6" EXTRUDED MULLION
6063-T6 ALUMINUM ALLOY
SCALE: 1/2" = 1"

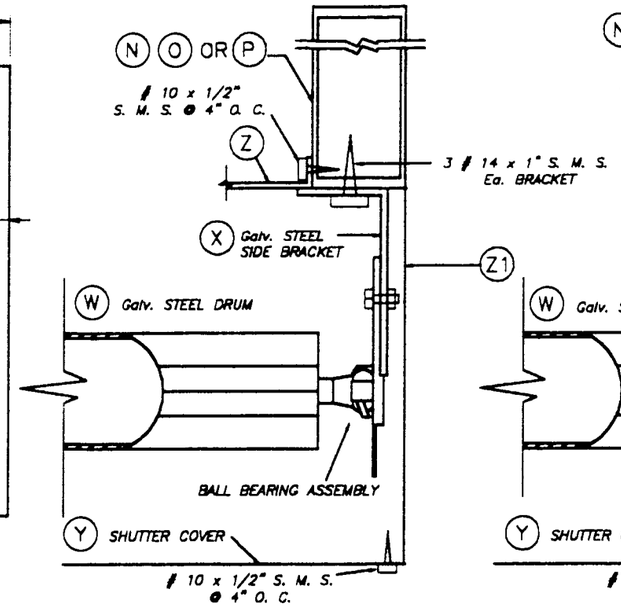

BRACKET DETAIL 1A

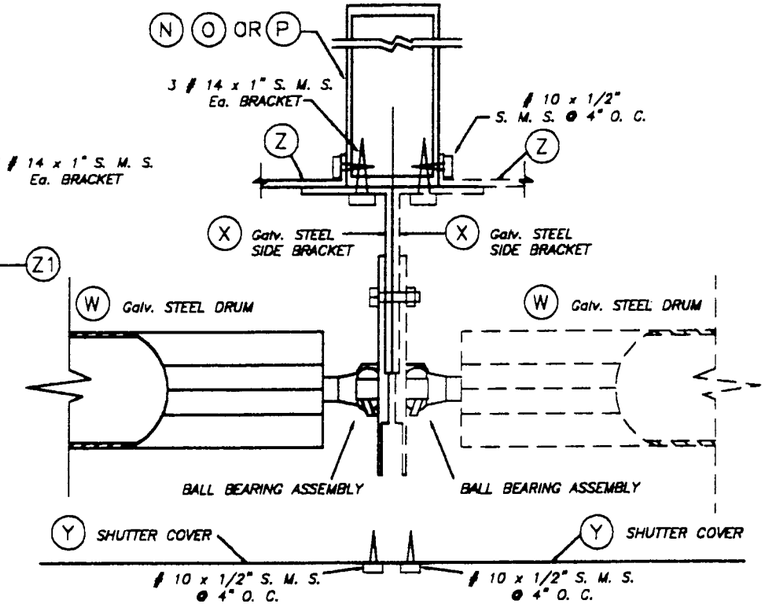

BRACKET DETAIL 2

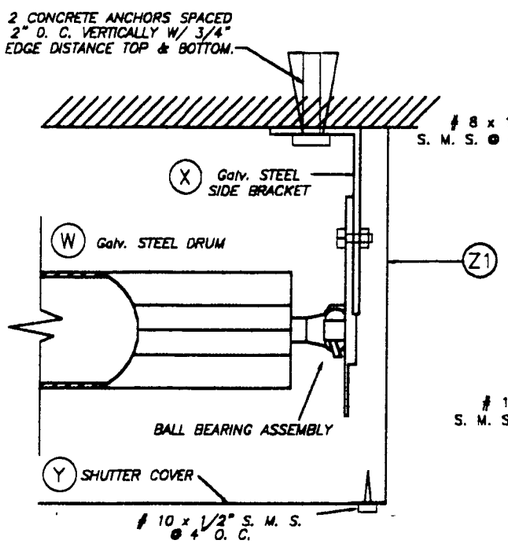

BRACKET DETAIL 1

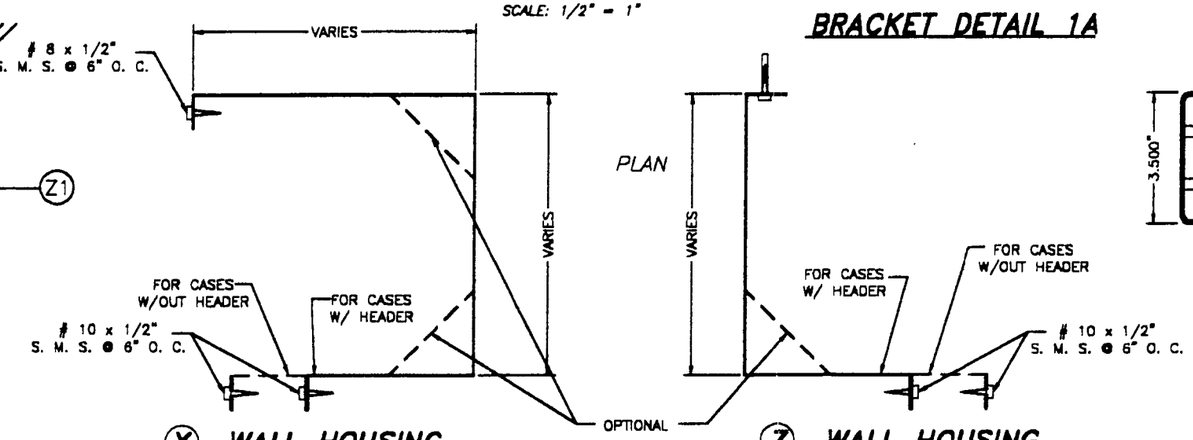

(Y) WALL HOUSING
SCALE: 3/16" = 1"
3105-H14 ALUMINUM ALLOY
THICKNESS: .032"

(Z) WALL HOUSING
SCALE: 3/16" = 1"
3105-H14 ALUMINUM ALLOY
THICKNESS: .032"

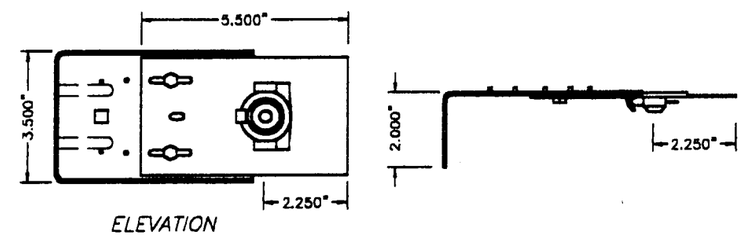

(X) SIDE BRACKET SCALE: 1/4" = 1"
1010 ELITE ROLLED STEEL F. E.
P. O. 1 Z 200 DESIGNATION
Ftu= 410 NW/MM2. % OF STRETCH
MINIMAL ON TEST. BAR OF 80 MM: 24 %
G-90 GALVANIZED COATING Thk.: .060"

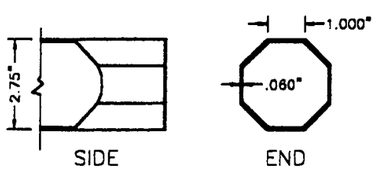

(W) DRUM SCALE: 1/4" = 1"
1010 ELITE ROLLED STEEL F. E.
P. O. 1 Z 200 DESIGNATION
Ftu= 410 NW/MM2. % OF STRETCH
MINIMAL ON TEST. BAR OF 80 MM: 24 %
G-90 GALVANIZED COATING Thk.: .060"

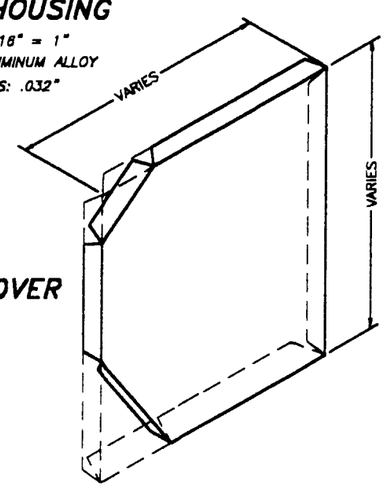

(Z1) SHUTTER SIDE COVER
SCALE: 3/16" = 1"
3105-H14 ALUMINUM ALLOY
THICKNESS: .032"

11/9/01

APPROVED AS NOTED FOR USE
NORTH FLORIDA BUILDING CODE
DATE FEB 14 2002
BY
PROJECT MANAGER
BUILDING CODE COMPLIANCE OFFICE
APPROVAL NO. 01-1115.09

MIAMI-DADE COUNTY

TILTECO INC.
TILLIT TESTING & ENGINEERING COMPANY
8585 N.W. 38th. St., Ste. 217 - VIRGINIA GARDENS, FL 33166
Phone : (305)871-1530 . Fax : (305)871-1531
EB 0006719
WALTER A. TILLIT Jr., P. E.
FLORIDA Lic. # 44167

ASSA/40mm BERTHA ROLL-UP

ALUTECH UNITED, INC.
(ASSA #68)
15 DIXON ST.
SELBYVILLE, DE. 19975

REV. No	DESCRIPTION	DATE	REV. No	DESCRIPTION	DATE
1	-	-	3		
2	-	-	4		

AS SHOWN
SCALE
6/14/01
DATE
01-167
DRAWING No
SHEET 3 OF 12

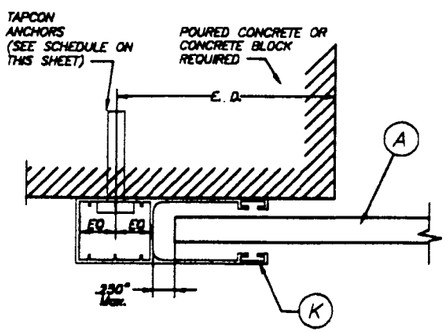

SECTION P – P (1) : WALL MOUNT

SCALE: 1/2" = 1"

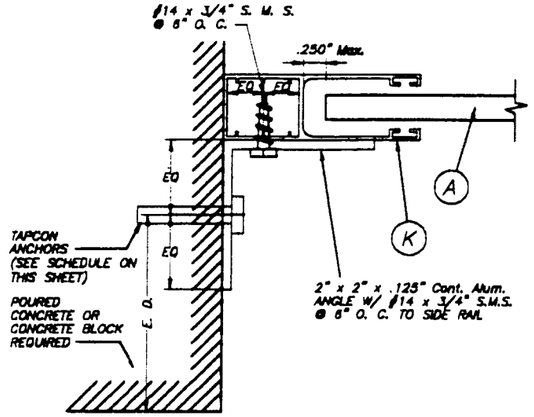

SECTION P – P (2) : INSIDE MOUNT

SCALE: 1/2" = 1"

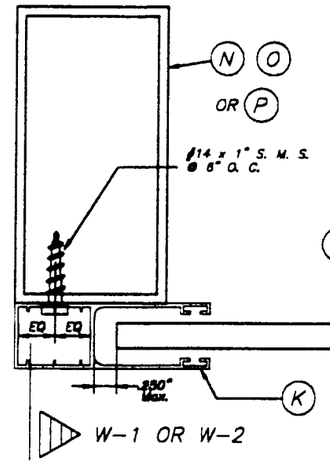

SECTION Q – Q : MULLION MOUNT (FACE MOUNT)

SCALE: 1/2" = 1"

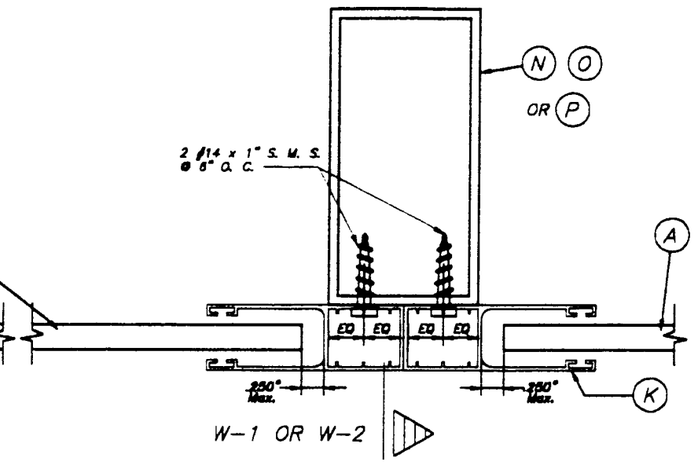

SECTION R – R : MULLION MOUNT (FACE MOUNT)

SCALE: 1/2" = 1"

SIDE RAIL ANCHOR SCHEDULE

MAXIMUM DESIGN PRESSURE RATING "W" (p. s. f.) AND CORRESPONDING MAXIMUM ANCHOR SPACING(in)* FOR SIDE RAILS (K) CONNECTION TO C. B. S.

(USE NEGATIVE PRESSURE VALUES AS PER ASCE 7–88)

MAXIMUM DESIGN LOAD "W" (p.s.f.)	SIDE RAIL (K)		
	WALL MOUNT	INSIDE MOUNT	BUILD–OUT MOUNT
80.0 OR LESS	6"	6"	6"
	6"	6"	6"
>80.0 TO 100.0	5"	5"	6"
	6"	6"	6"

MASONRY
POURED CONCRETE

SUBSTRATE LEGEND

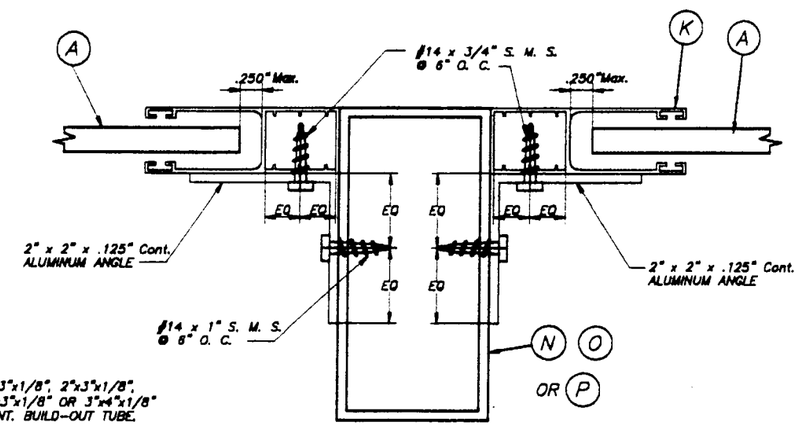

SECTION R – R : MULLION MOUNT (INSIDE MOUNT)

SCALE: 1/2" = 1"

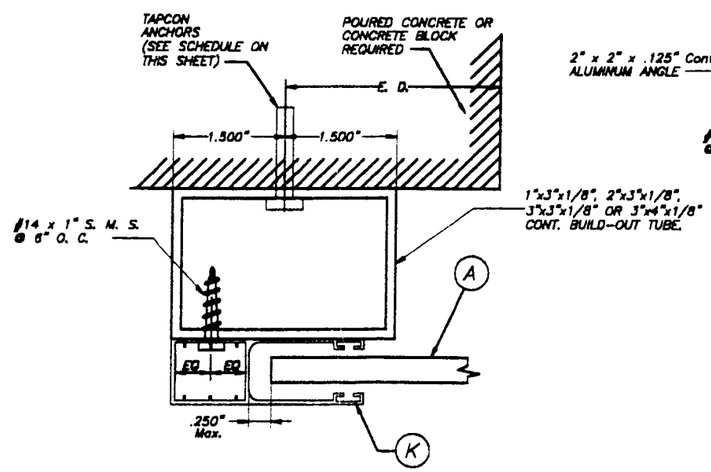

SECTION P – P (3) : BUILD–OUT MOUNT

SCALE: 1/2" = 1"

* MAXIMUM ANCHOR SPACING (in.) AT SIDE RAILS VERSUS EDGE DISTANCE = E. D.

MAXIMUM SIDE RAILS ANCHOR SPACINGS SHOWN ON THIS SHEET ARE VALID FOR 3 1/2" EDGE DISTANCE.
FOR E. D. LESS THAN 3 1/2", REDUCE ANCHOR SPACING BY MULTIPLYING SPACINGS SHOWN ON ABOVE INDICATED SCHEDULE BY THE FOLLOWING FACTORS.

ACTUAL E. D.= EDGE DISTANCE	FACTOR
3"	.86
2 1/2"	.71
2"	.50

11/9/01

APPROVED AS CORRECTED FOR THE SOUTH FLORIDA BUILDING CODE
DATE FEB 14 2002
BY
MIAMI-DADE COUNTY
APPROVAL NO. 01-1115.04
MIAMI-DADE COUNTY

TILTECO INC.
TILLIT TESTING & ENGINEERING COMPANY
6585 N.W. 36th. St., Ste. 217 – VIRGINIA GARDENS, FL 33166
Phone : (305)871-1530 . Fax : (305)871-1531
EB 0006719
WALTER A. TILLIT Jr., P. E.
FLORIDA Lic. # 44167

ASSA/40mm BERTHA ROLL–UP

ALUTECH UNITED, INC.
(ASSA #68)
15 DIXON ST.
SELBYVILLE, DE. 19975

REV. No	DESCRIPTION	DATE	REV. No	DESCRIPTION	DATE
1	–	–	3		
2	–	–	4		

AS SHOWN SCALE

6/14/01 DATE

01–167 DRAWING No

SHEET 4 OF 12

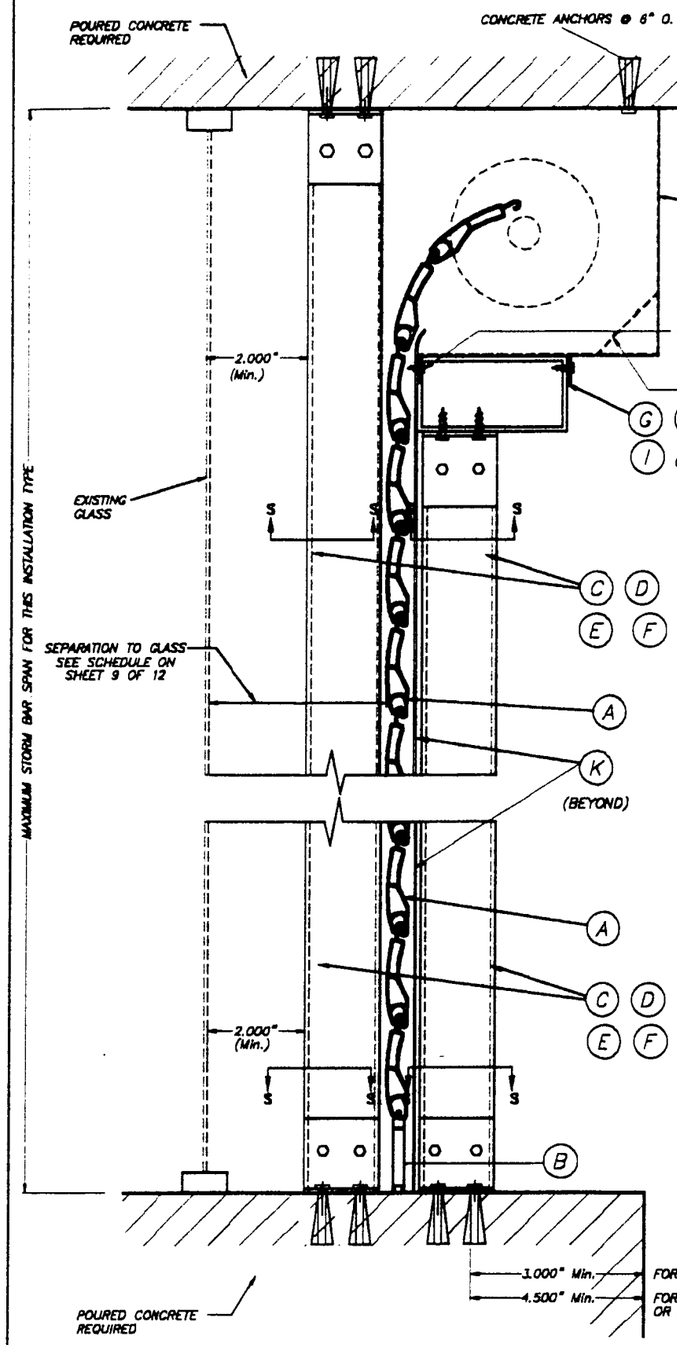

CEILING & FLOOR MOUNTING INSTALLATION W/ FIXED OR REMOVABLE STORM BARS W/CONCRETE ANCHORS

(SEE SECTION "S" FOR ANCHOR TYPE REQUIREMENT)

SCALE : 1/4" = 1"

SINGLE SPAN SECTIONS AND DETAILS ARE SIMILAR TO ABOVE SHOWN WITHOUT STORM BAR & HEADERS.

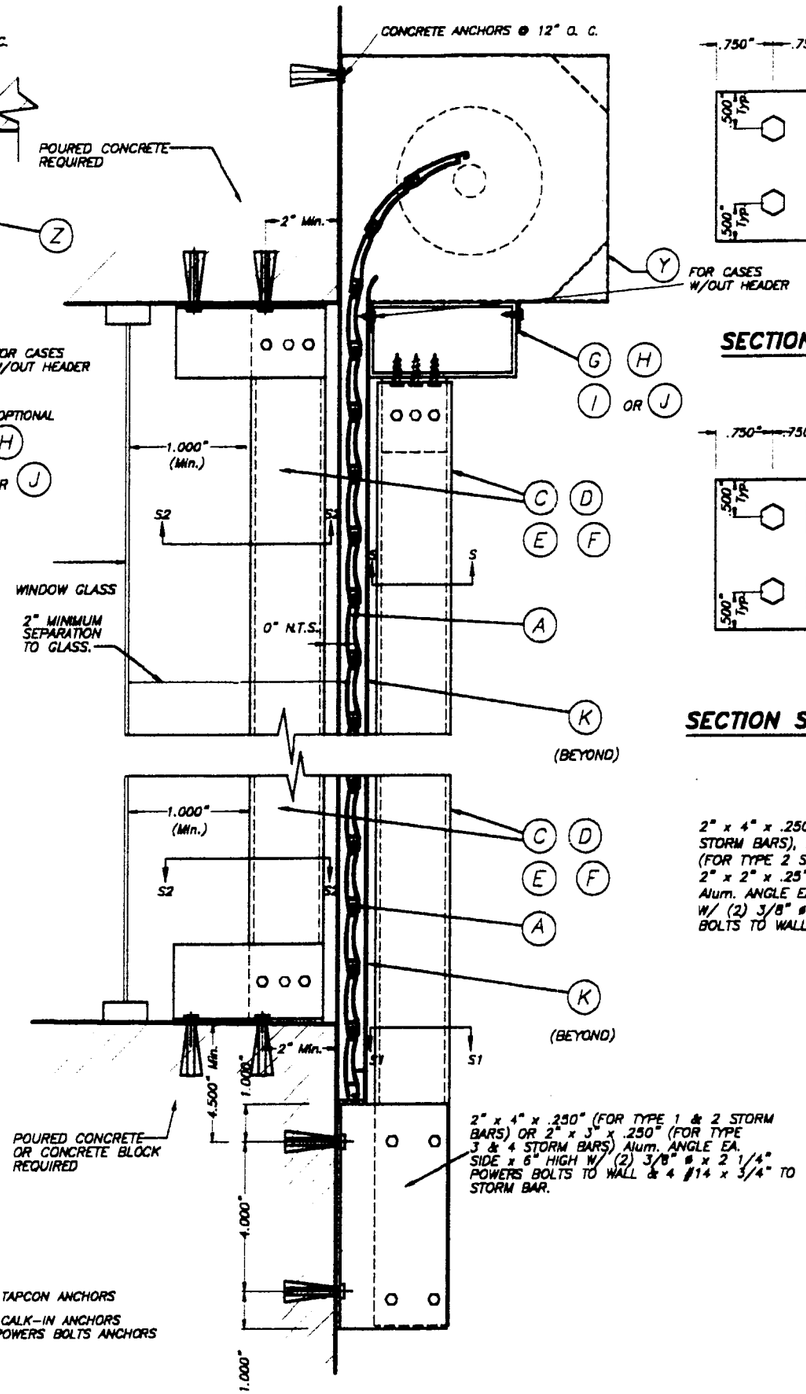

WALL MOUNTING INSTALLATION W/FIXED STORM BARS W/CONCRETE ANCHORS

SCALE : 1/4" = 1"

SECTIONS V – V

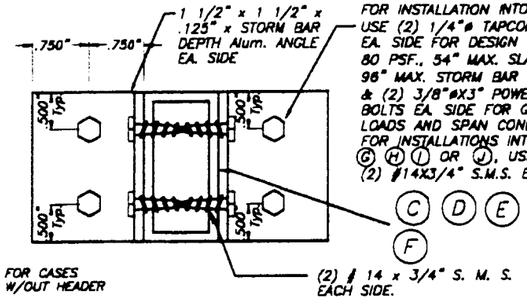

SECTION S – S (FOR FIXED STORM BAR)

SCALE : 1/2" = 1"

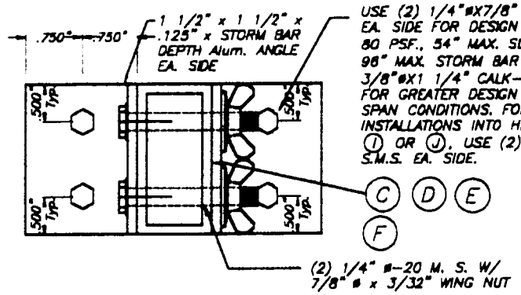

SECTION S – S (FOR REMOVABLE STORM BAR)

SCALE : 1/2" = 1"

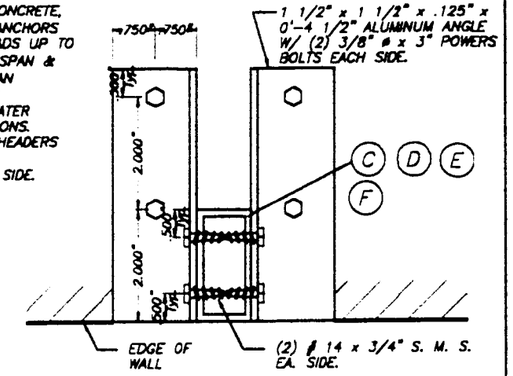

SECTION S2 – S2

SCALE : 1/4" = 1"

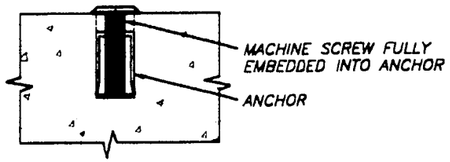

DETAIL A

SCALE : 1/2" = 1"

1/4" ø-20 OR 3/8" ø-16 MACHINE SCREWS USED JOINTLY W/ 1/4" ø x 7/8" OR 3/8" ø x 1 1/4" CALK-IN ANCHORS RESPECTIVELY SHALL BE LEFT TOGETHER W/ ANCHORS AT THE TIME STORM BARS ARE REMOVED. (SEE DET. A).

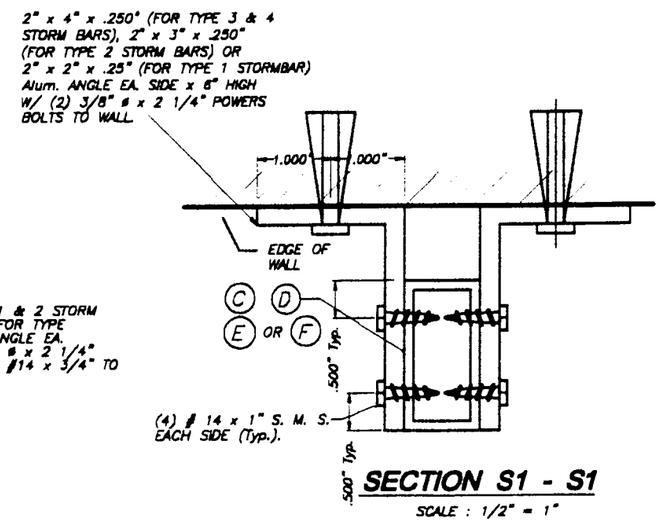

SECTION S1 - S1

SCALE : 1/2" = 1"

FEB 14 2002

BUILDING CODE COMPLIANCE OFFICE

APPROVAL NO. 01-1115.04

MIAMI-DADE COUNTY

11/9/01

TILTECO INC.

TILLIT TESTING & ENGINEERING COMPANY

8595 N.W. 38th. St., Ste. #17 – VIRGINIA GARDENS, FL 33166

Phone : (305)871-1530 . Fax : (305)871-1531

EB 0006719

WALTER A. TILLIT Jr., P. E.

FLORIDA Lic. # 44167

ASSA/40mm BERTHA ROLL-UP

ALUTECH UNITED, INC.

(ASSA #68)

15 DIXON ST.

SELBYVILLE, DE. 19975

REV. No	DESCRIPTION	DATE	REV. No	DESCRIPTION	DATE
1	–	–	3		
2	–	–	4		

AS SHOWN SCALE

6/14/01 DATE

01-167 DRAWING No

SHEET 5 OF 12

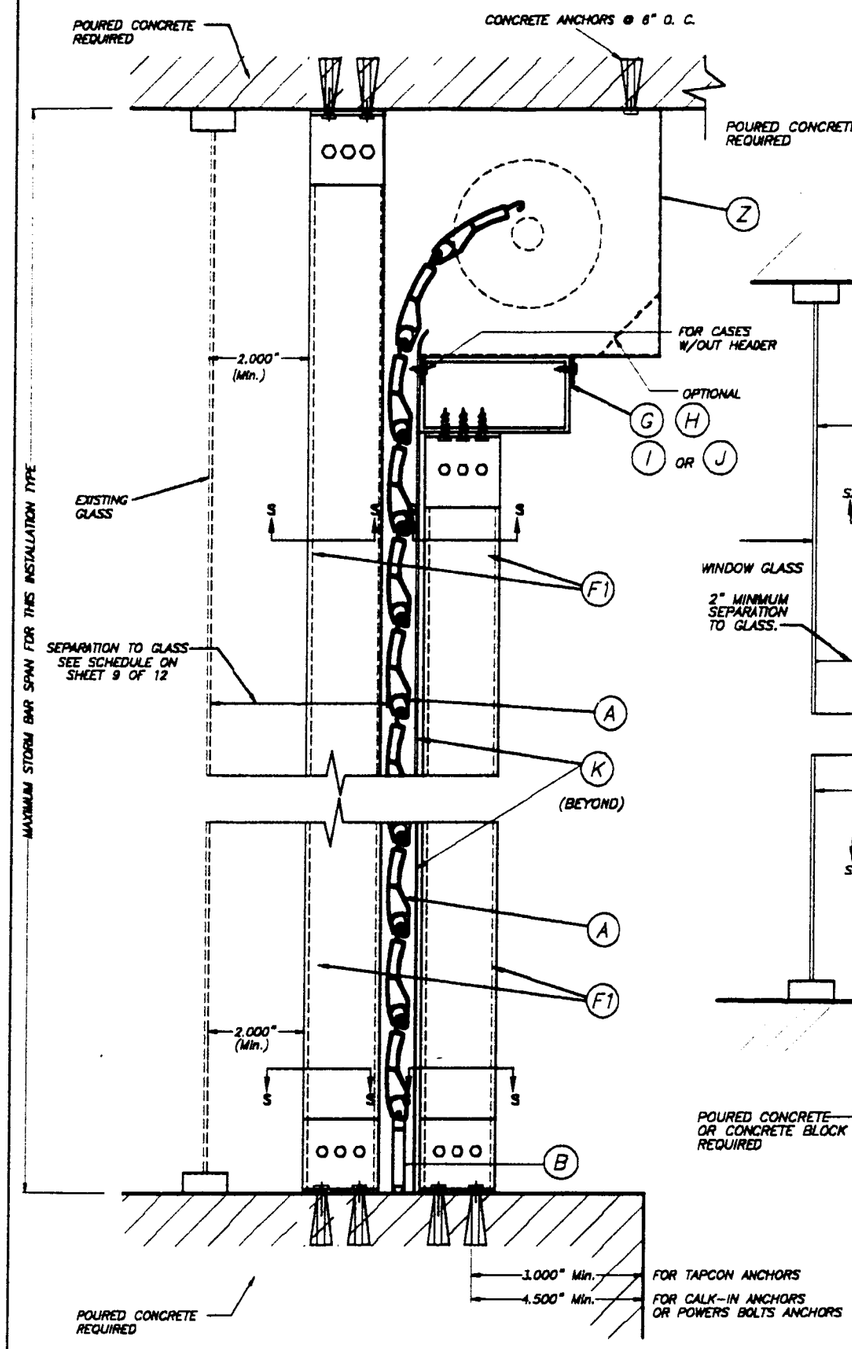

CEILING & FLOOR MOUNTING INSTALLATION W/ FIXED OR REMOVABLE STORM BARS W/CONCRETE ANCHORS

(SEE SECTION "S" FOR ANCHOR TYPE REQUIREMENT)

SCALE : 1/4" = 1"

SINGLE SPAN SECTIONS AND DETAILS ARE SIMILAR TO ABOVE SHOWN WITHOUT STORM BAR & HEADERS.

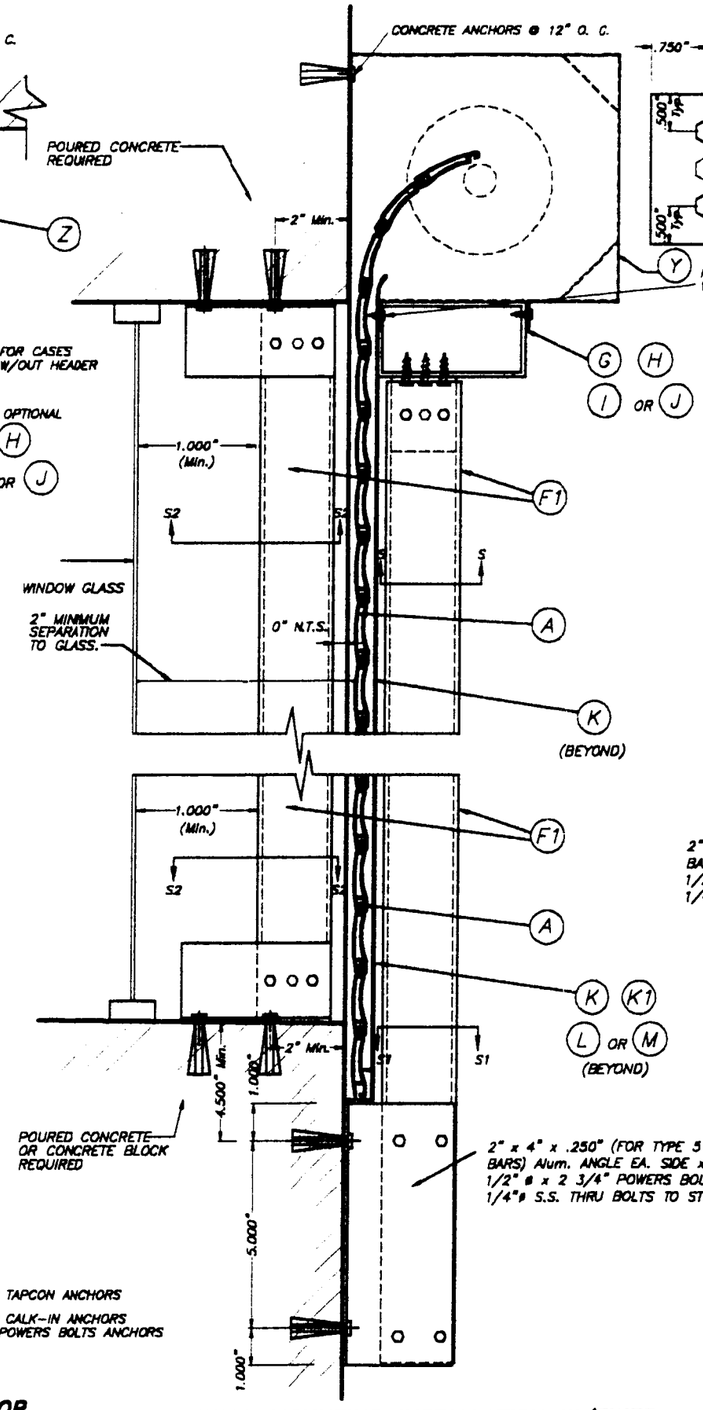

2" x 4" x .250" (FOR TYPE 5 STORM BARS) Alum. ANGLE EA. SIDE x 7" HIGH W/ (2) 1/2" ø x 2 3/4" POWERS BOLTS TO WALL & (4) 1/4"ø S.S. THRU BOLTS TO STORM BAR.

WALL MOUNTING INSTALLATION W/FIXED STORM BARS W/CONCRETE ANCHORS

SCALE : 1/4" = 1"

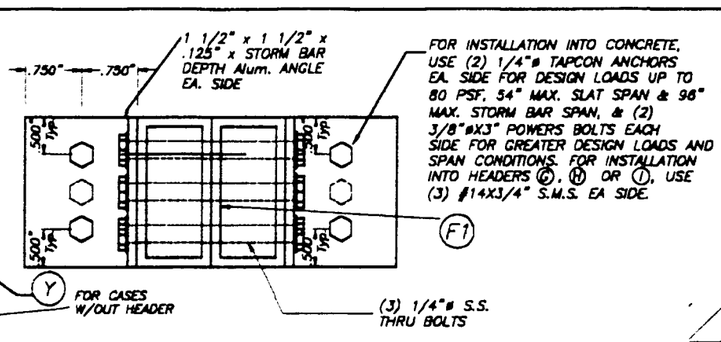

SECTION S - S (FOR FIXED STORM BAR)

SCALE : 1/2" = 1"

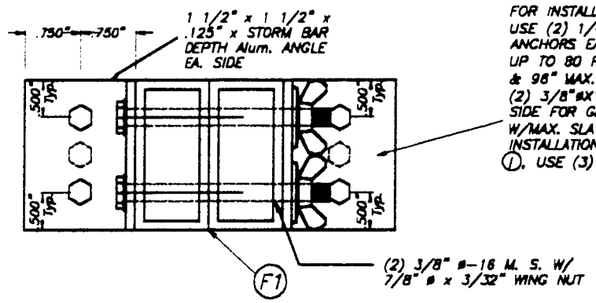

FOR INSTALLATION INTO CONCRETE USE (2) 1/4"øX7/8" CALK-IN * ANCHORS EA. SIDE FOR DESIGN LOADS UP TO 80 PSF., 54" MAX. SLAT SPAN & 96" MAX. STORM BAR SPAN, & (2) 3/8"øX1 1/4" CALK-INS * EA. SIDE FOR GREATER DESIGN LOADS AND W/MAX. SLAT SPAN OF 36". FOR INSTALLATIONS INTO HEADERS G H OR I, USE (3) #14X3/4" S.M.S. EA. SIDE.

SECTION S - S (FOR REMOVABLE STORM BAR)

SCALE : 1/2" = 1"

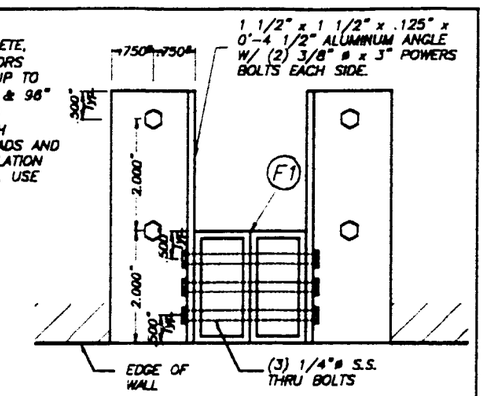

SECTION S2 - S2

SCALE : 1/4" = 1"

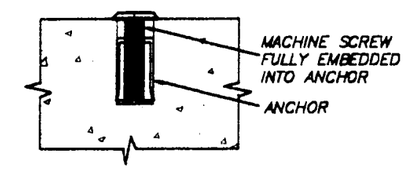

DETAIL A

SCALE : 1/2" = 1"

1/4" ø-20 OR 3/8" ø-16 MACHINE SCREWS USED JOINTLY W/ 1/4" ø x 7/8" OR 3/8" ø x 1 1/4" CALK-IN ANCHORS RESPECTIVELY SHALL BE LEFT TOGETHER W/ ANCHORS AT THE TIME STORM BARS ARE REMOVED. (SEE DET. A).

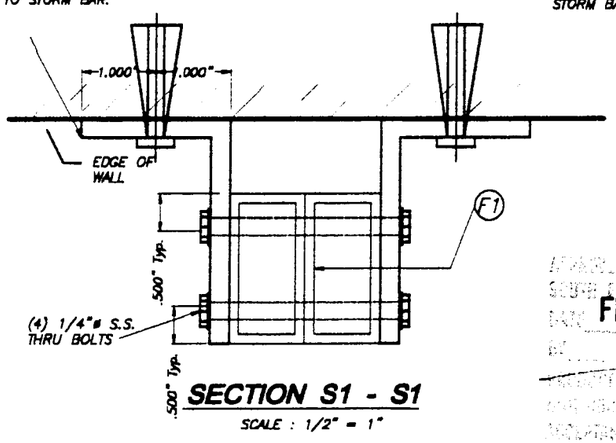

SECTION S1 - S1

SCALE : 1/2" = 1"

FEB 14 2002

MIAMI-DADE COUNTY

SECTIONS V - V

11/9/01

TILTECO INC.
TILLIT TESTING & ENGINEERING COMPANY
8585 N.W. 38th. St., Ste. 217 - VIRGINIA GARDENS, FL 33166
Phone : (305)871-1530 . Fax : (305)871-1531
EB 0006719
WALTER A. TILLIT Jr., P. E.
FLORIDA Lic. # 44167

ASSA/40mm BERTHA ROLL-UP

ALUTECH UNITED, INC.
(ASSA #68)
15 DIXON ST.
SELBYVILLE, DE. 19975

REV. No	DESCRIPTION	DATE	REV. No	DESCRIPTION	DATE
1	-	-	3		
2	-	-	4		

AS SHOWN SCALE

8/14/01 DATE

01-167 DRAWING No

SHEET 5A OF 12

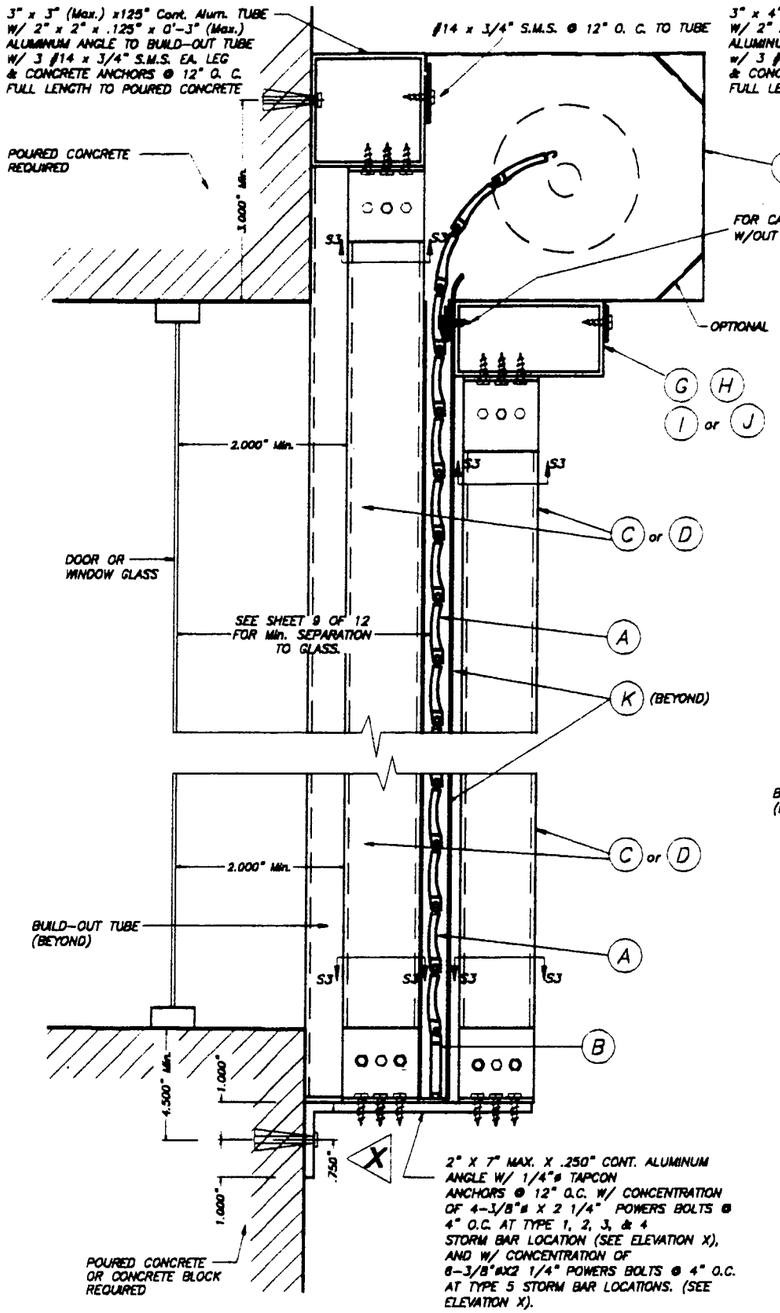

CASE I

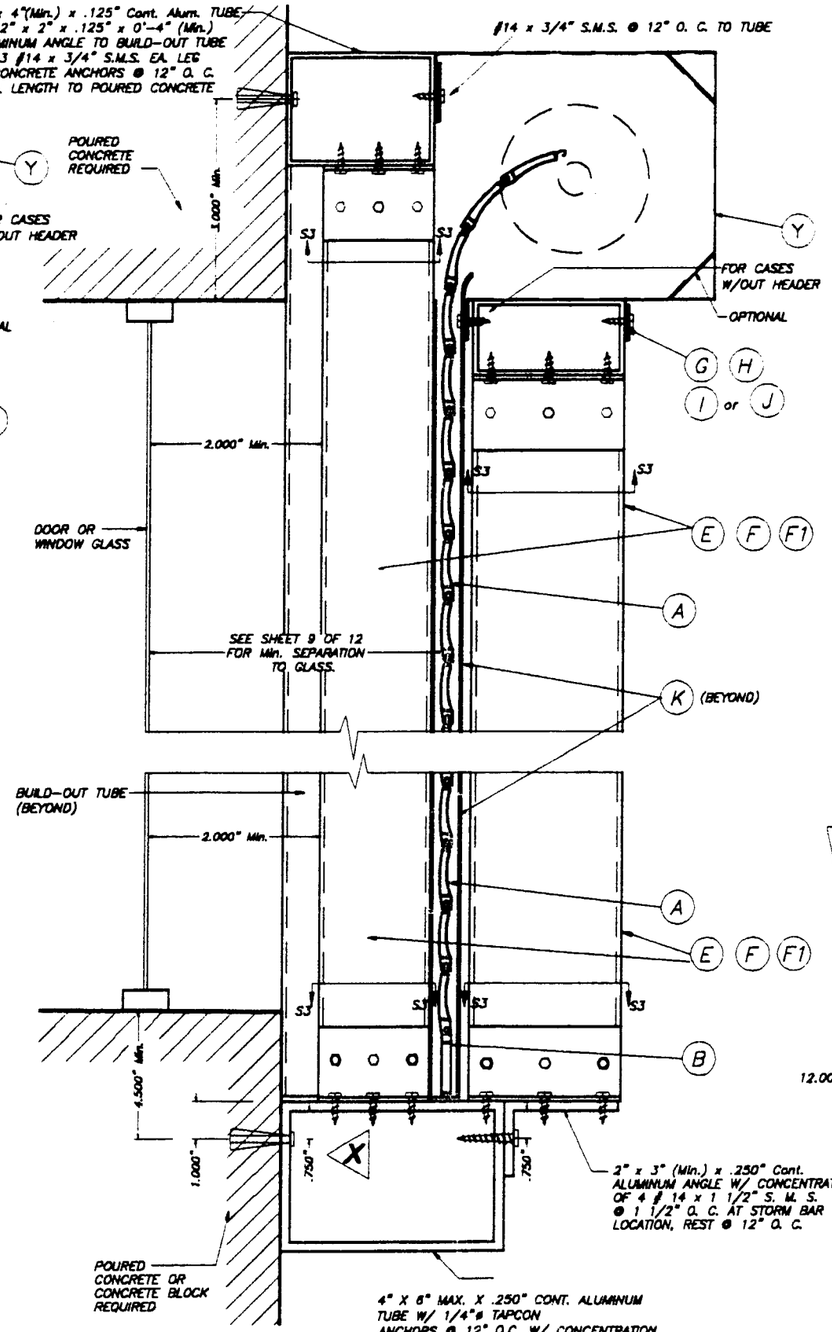

CASE II

FIXED STORM BAR CONNECTION AT BUILD-OUT INSTALLATIONS W/SHEET METAL SCREWS

SCALE : 1/4" = 1"

NOTE:
SINGLE SPAN SECTIONS AND DETAILS ARE SIMILAR TO ABOVE SHOWN WITHOUT STORM BAR & HEADERS.

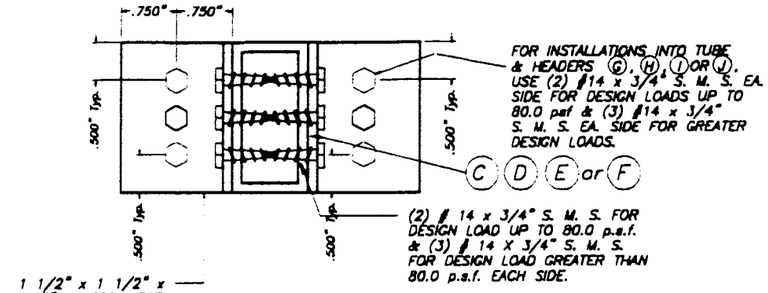

SECTION S3 - S3

SCALE : 1/2" = 1"

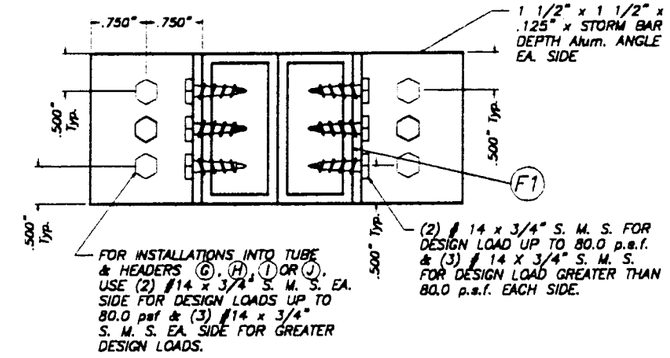

SECTION S3 - S3

SCALE : 1/2" = 1"

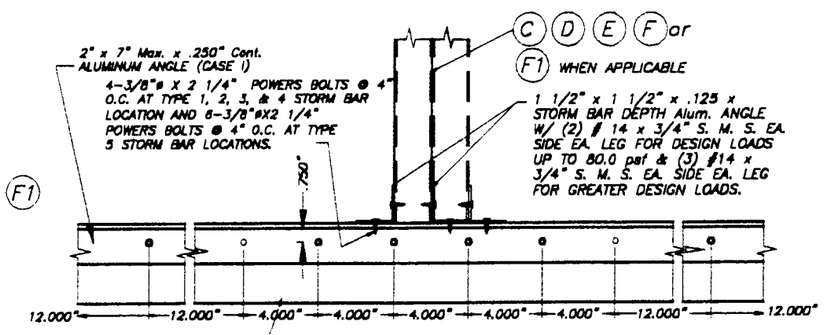

ELEVATION X

SCALE : 1/8" = 1"

APPROVED AS OF PLANS UNDER THE SOUTH FLORIDA BUILDING CODE
DATE FEB 14 2002
BY
PRODUCT CONTROL EXPERT
PRODUCT CONTROL COMPLIANCE OFFICE
APPROVAL No. 01-1115.04

MIAMI-DADE COUNTY

SECTIONS V - V

11/9/01

TILTECO INC.
TILLIT TESTING & ENGINEERING COMPANY
6595 N.W. 36th. St., Ste. 217 - VIRGINIA GARDENS, FL 33166
Phone : (305)871-1530 . Fax : (305)871-1531
EB 0006719
WALTER A. TILLIT Jr., P. E.
FLORIDA Lic. # 44167

ASSA/40mm BERTHA ROLL-UP

ALUTECH UNITED, INC.
(ASSA #68)
15 DIXON ST.
SELBYVILLE, DE. 19975

REV. No	DESCRIPTION	DATE	REV. No	DESCRIPTION	DATE
1	-	-	3		
2	-	-	4		

AS SHOWN SCALE

6/14/01 DATE

01-167 DRAWING No

SHEET 8 OF 12

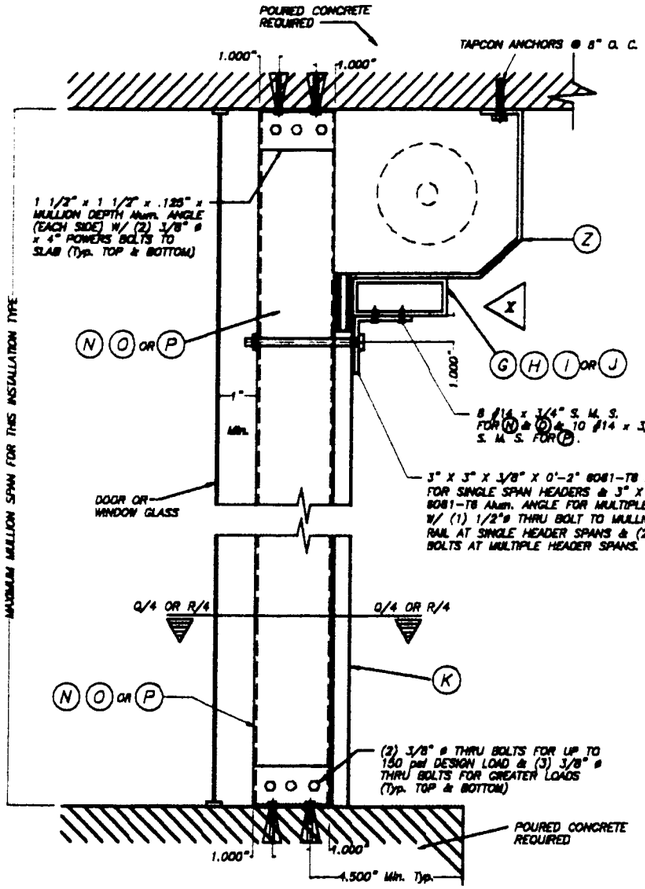

FLOOR/CEILING MOUNTING : SECTION W-W (1), W/O HEADER SECTION W-W (2), W/HEADER

SCALE : 1/8" = 1"

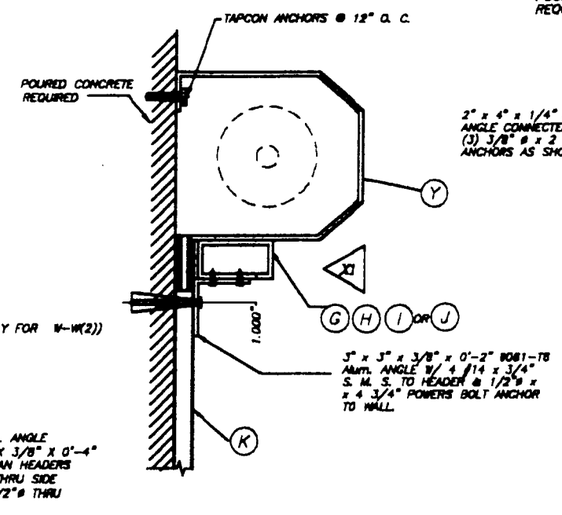

WALL MOUNTING : SECTION W-W (3)

SCALE : 1/8" = 1"

NOTE :
THIS INSTALLATION IS ONLY VALID FOR STORM BARS WITH Max. SPAN = 8'-0", HEADERS WITH 12'-0" Max. SINGLE SPAN & 80 p.s.f. MAXIMUM DESIGN LOAD. OR STORM BARS WITH MAX. SPAN = 6'-0", HEADERS WITH 15'-0" SINGLE & 80 p.s.f. MAXIMUM DESIGN LOAD.

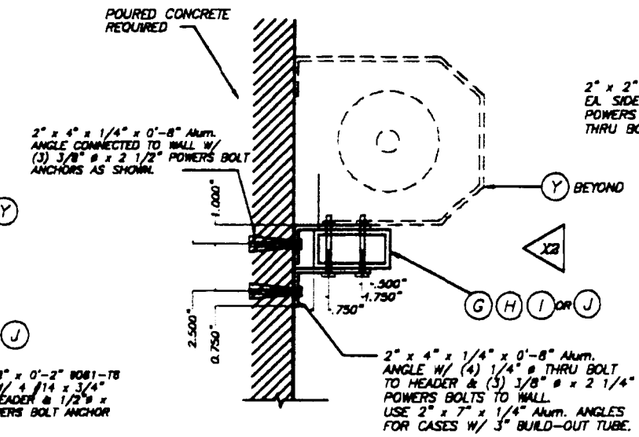

WALL MOUNTING : SECTION W-W(3)

SCALE : 1/8" = 1"

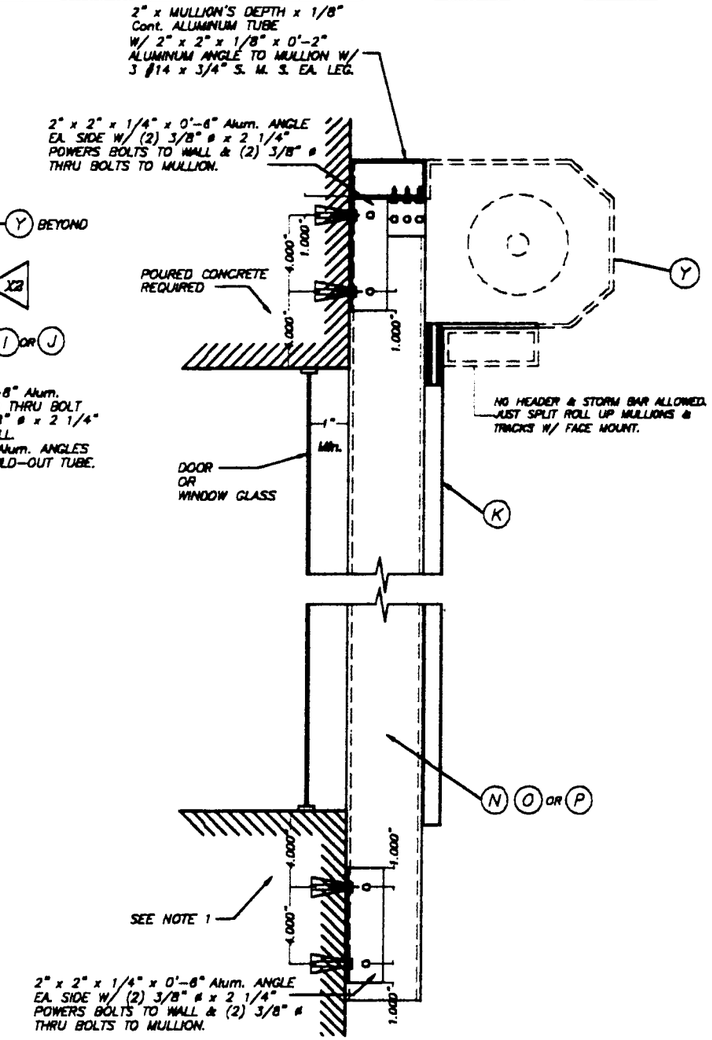

WALL MOUNTING : MULLION CONNECTION AT TOP & BOTTOM : SECTION W-W (1)

SCALE : 1/8" = 1"

NOTE 1 :
EXISTING WALL MAY BE POURED CONCRETE OR CONCRETE BLOCK FOR DESIGN LOADS UP TO 150.0 psf AND SHALL BE POURED CONCRETE OR CONCRETE FILLED BLOCKS FOR GREATER LOADS.

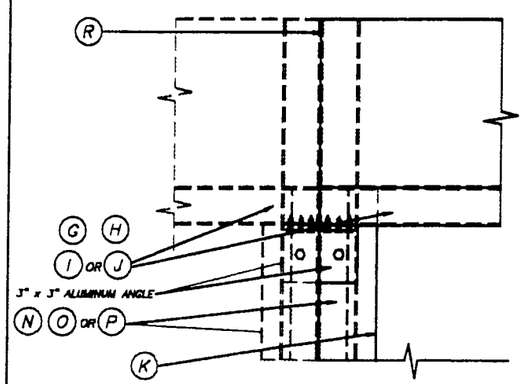

ELEVATION X

SCALE : 1/8" = 1"

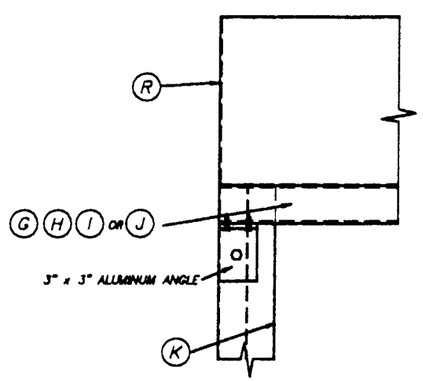

ELEVATION X1

SCALE : 1/8" = 1"

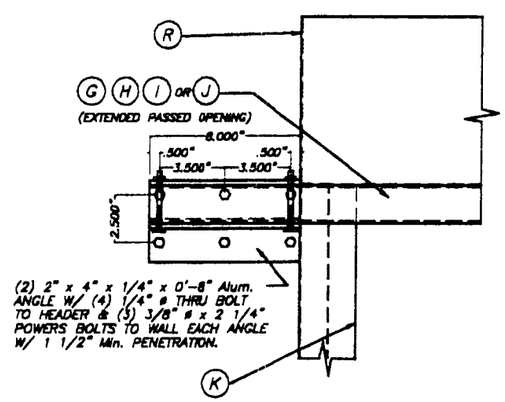

ELEVATION X2

SCALE : 1/8" = 1"

TYPICAL HEADER CONNECTION AT ENDS: SECTIONS W-W

11/9/01

FEB 14 2002

COMPLIANCE OFFICE
ASSURANCE No 01-1115.09

MIAMI-DADE COUNTY

TILTECO INC.
TILLIT TESTING & ENGINEERING COMPANY
8395 N.W. 38th. St., Ste. 217 - VIRGINIA GARDENS, FL 33166
Phone : (305)871-1530 . Fax : (305)871-1531
EB 0008719
WALTER A. TILLIT Jr., P. E.
FLORIDA Lic. # 44167

ASSA/40mm BERTHA ROLL-UP

AS SHOWN SCALE

ALUTECH UNITED, INC.
(ASSA #68)
15 DIXON ST.
SELBYVILLE, DE. 19975

6/14/01 DATE

01-167 DRAWING No

REV. No	DESCRIPTION	DATE	REV. No	DESCRIPTION	DATE
1	-	-	4		
2	-	-	4		

SHEET 7 OF 12

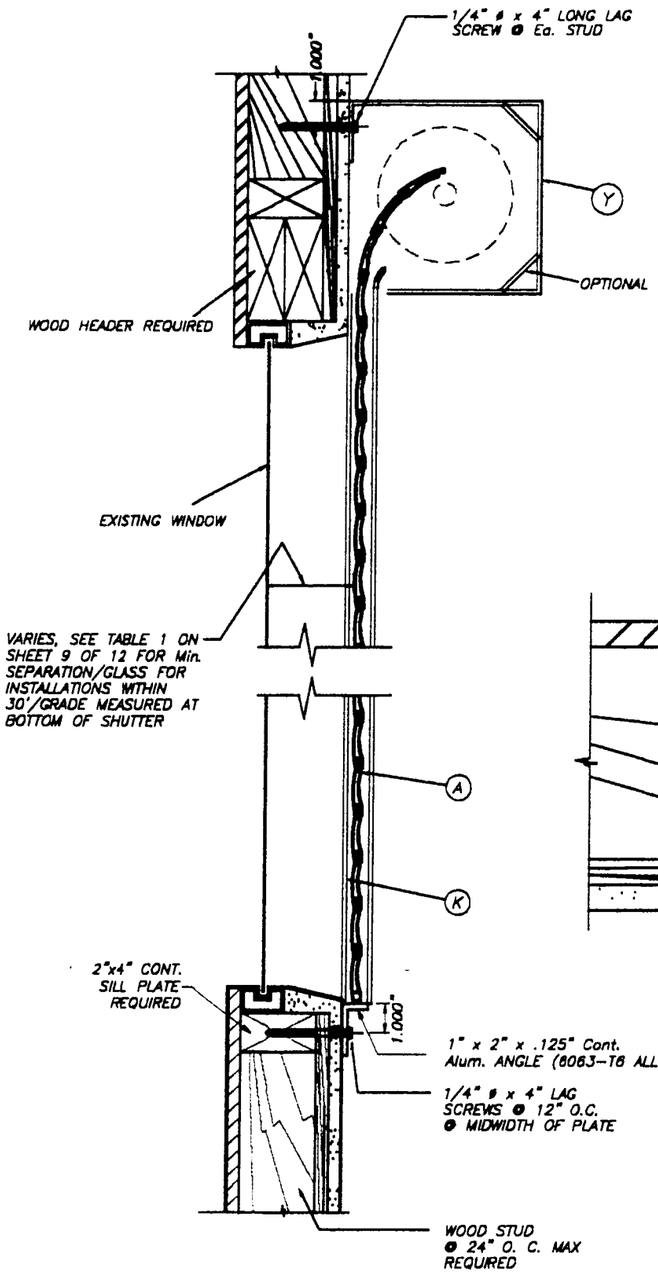

WALL MOUNTING INSTALLATION

SINGLE SPAN CONDITION

N. T. S.

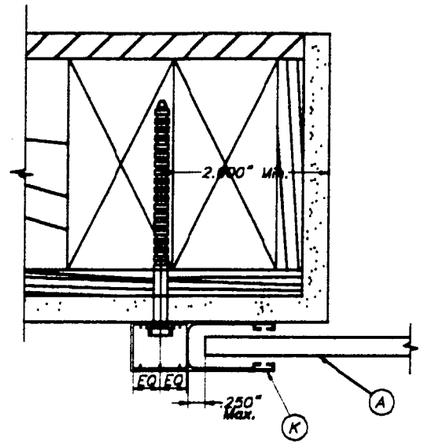

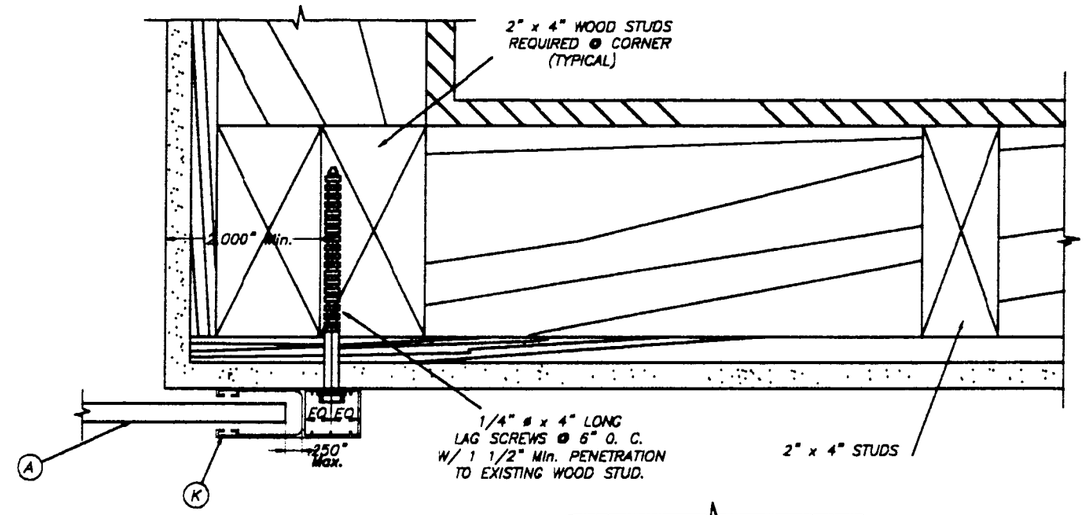

PLAN A (SECTION)

WALL MOUNT

SCALE : 3/8" = 1"

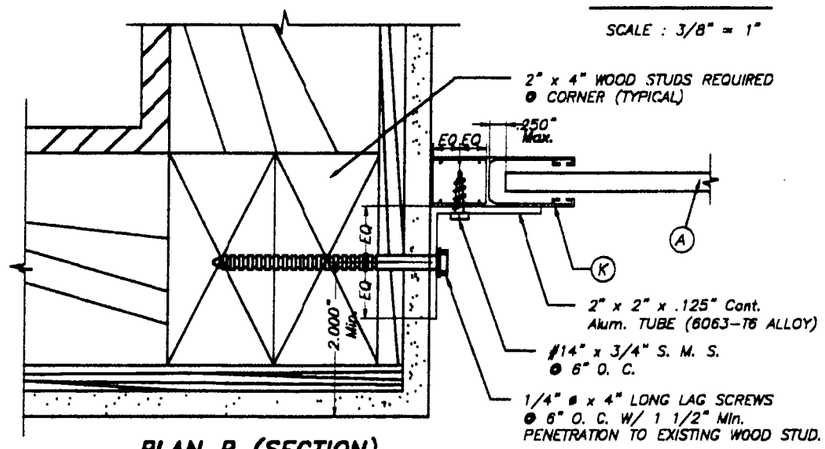

PLAN B (SECTION)

INSIDE MOUNT

SCALE : 3/8" = 1"

NOTES:

1. INSTALLATIONS ARE ONLY VALID FOR BUILDINGS WITH DESIGN LOADS UP TO 75.0 psf.
2. FOR NEW FRAME CONSTRUCTION: WOOD MEMBER TO BE SOUTHERN PINE No. 2 W/ SPECIFIC DENSITY OF 0.55 OR EQUAL.
3. MINIMUM PENETRATION OF LAG SCREWS INTO WOOD MEMBER TO BE 1 1/2".

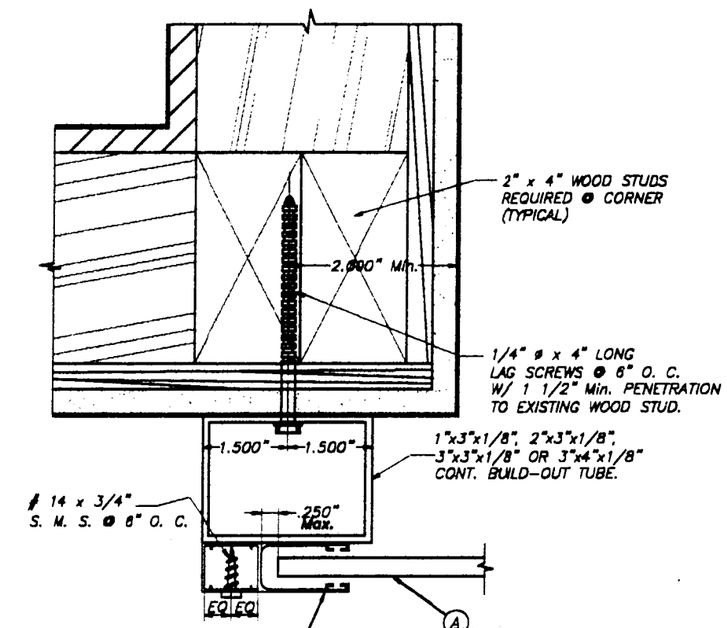

PLAN C (SECTION)

BUILD-OUT

SCALE : 3/8" = 1"

FEB 14 2002

COMPLIANCE OFFICE

ACCEPTANCE NO. 01-1115.09

MIAMI-DADE COUNTY

11/9/01

TILTECO INC.

TILLIT TESTING & ENGINEERING COMPANY

6595 N.W. 36th. St., Ste. 217 - VIRGINIA GARDENS, FL 33166

Phone : (305)871-1530 . Fax : (305)871-1531

EB 0006719

WALTER A. TILLIT Jr., P. E.

FLORIDA Lic. # 44167

ASSA/40mm BERTHA ROLL-UP

ALUTECH UNITED, INC.

(ASSA #68)

15 DIXON ST.

SELBYVILLE, DE. 19975

REV. No	DESCRIPTION	DATE	REV. No	DESCRIPTION	DATE
1	–	–	3		
2	–	–	4		

AS SHOWN SCALE

6/14/01 DATE

01-167 DRAWING No

SHEET 8 OF 12

SLAT PERFORMANCE CHART
MAXIMUM NEGATIVE DESIGN PRESSURE RATING "W" (p. s. f.) AND CORRESPONDING MAXIMUM SLAT SPAN "L" FOR TYPE 1 SLAT

(USE NEGATIVE PRESSURE VALUES AS PER ASCE 7-88)

SLAT TYPE / Max. DESIGN LOAD "W" (p.s.f.)	MAXIMUM SLAT SPAN	MINIMUM SEPARATION TO GLASS	
	SINGLE & MULTIPLE UNIT *	SINGLE & MULTIPLE UNIT **	SINGLE & MULTIPLE UNIT ***
40.0	4'-2"	2 3/4"	2 3/4"
45.0	4'-0"	2 5/8"	2 5/8"
50.0	3'-11"	2 5/8"	2 5/8"
55.0	3'-9"	2 1/2"	2 1/2"
60.0	3'-8"	2 1/2"	2 1/2"
65.0	3'-6"	2 1/2"	2 1/2"
70.0	3'-5"	2 3/8"	2 3/8"
75.0	3'-3"	2 3/8"	2 3/8"
80.0	3'-2"	2 3/8"	2 3/8"
85.0	3'-1"	2 1/4"	2 1/4"
90.0	3'-0"	2 1/4"	2 1/4"
95.0	2'-11"	2 1/4"	2 1/4"
100.0	2'-10"	2 1/4"	2 1/4"

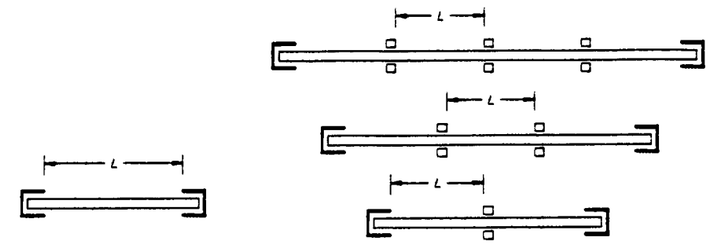

SINGLE SPAN

MULTIPLE SPAN

SPAN LAYOUT

* SPANS VALID FOR EVERY INSTALLATION LOCATED AT ANY ELEVATION OF BUILDING MEASURED AT BOTTOM OF SHUTTER. MINIMUM SEPARATION TO GLASS FOR SINGLE AND MULTIPLE UNITS SHALL BE MEASURED FROM BACK OF SLAT TO GLASS.

** MINIMUM SEPARATION TO GLASS FOR SHUTTERS INSTALLED WITHIN THE FIRST 30'-0" ELEVATION OF BUILDING AND MAXIMUM SPAN. SEE TABLE 1 FOR Min. SEPARATION TO GLASS FOR SPANS LESS THAN THE Max. ALLOWED.

*** MINIMUM SEPARATION TO GLASS FOR SHUTTERS INSTALLED ABOVE 30'-0" ELEVATION OF BUILDING, MEASURED AT BOTTOM OF SHUTTER.

TABLE 1:

SLAT SPAN (ft.)	MINIMUM SEPARATION TO GLASS
36" OR LESS	2 1/4"
> 36" TO 48"	2 5/8"
> 48" TO 50"	2 3/4"

APPROVED AS CONFORMING WITH THE SOUTH FLORIDA BUILDING CODE
DATE FEB 14 2002
BY
PRODUCT CONTROL DIVISION
BUILDING CODE COMPLIANCE OFFICE
ACCEPTANCE NO. 01-1115.04

MIAMI-DADE COUNTY

11/9/01

TILTECO INC.
TILLIT TESTING & ENGINEERING COMPANY
6595 N.W. 36th. St., Ste. 217 - VIRGINIA GARDENS, FL 33166
Phone : (305)871-1530 . Fax : (305)871-1531
EB 0006719
WALTER A. TILLIT Jr., P. E.
FLORIDA Lic. # 44167

ASSA/40mm BERTHA ROLL-UP

ALUTECH UNITED, INC.
(ASSA #68)
15 DIXON ST.
SELBYVILLE, DE. 19975

REV. No	DESCRIPTION	DATE	REV. No	DESCRIPTION	DATE
1	-	-	3		
2	-	-	4		

AS SHOWN SCALE

6/14/01 DATE

01-167 DRAWING No

SHEET 9 OF 12

STORM BAR LOADING CHART

MAXIMUM DESIGN PRESSURE RATING "W" (p. s. f.) AND CORRESPONDING MAXIMUM SPAN "L" FOR A GIVEN TYPE OF STORM BAR AND STORM BAR SPACING.

(USE NEGATIVE PRESSURE VALUES AS PER ASCE 7-88)

MAX. SPAN FOR STORM BARS W/REGULAR CONCRETE ANCHORS

MAXIMUM DESIGN LOAD "W" (p.s.f.)	TYPE 1 STORM BAR 2" x 2" x .250"		TYPE 2 STORM BAR 2" x 3" x .125"		TYPE 3 STORM BAR 2" x 4" x .125"		TYPE 4 STORM BAR 2" x 4" x .250"		TYPE 5 STORM BAR (2) 2" x 4" x .250"	
	STORM BAR SPACING *		STORM BAR SPACING *		STORM BAR SPACING *		STORM BAR SPACING *		STORM BAR SPACING *	
	≤ 3'-0"	3' TO 4'	≤ 3'-0"	3' TO 4'	≤ 3'-0"	3' TO 4'	≤ 3'-0"	3' TO 4'	≤ 3'-0"	3' TO 4'
40	7'-7"	7'-1"	8'-0"	8'-0"	10'-0"	9'-6"	11'-10"	11'-0"	14'-1"	13'-1"
45	7'-5"	6'-11"	8'-0"	7'-9"	10'-0"	9'-3"	11'-6"	10'-8"	13'-8"	12'-9"
50	7'-3"	6'-9"	8'-0"	7'-7"	9'-8"	9'-0"	11'-2"	10'-5"	13'-4"	12'-5"
55	7'-0"	6'-7"	7'-11"	7'-5"	9'-6"	8'-10"	10'-11"	10'-2"	13'-0"	12'-1"
60	6'-11"	6'-5"	7'-9"	7'-3"	9'-3"	8'-7"	10'-8"	10'-0"	12'-9"	11'-10"
65	6'-9"	6'-3"	7'-7"	7'-1"	9'-1"	8'-5"	10'-6"	9'-9"	12'-6"	11'-7"
70	6'-8"	6'-2"	7'-6"	6'-10"	8'-11"	8'-3"	10'-4"	9'-7"	12'-3"	11'-5"
75	6'-6"	6'-1"	7'-4"	6'-7"	8'-9"	8'-1"	10'-1"	9'-5"	12'-0"	11'-2"
80	6'-5"	6'-0"	7'-3"	6'-5'	8'-7"	7'-10"	9'-11"	9'-3"	11'-10"	11'-0"
85	6'-4"	5'-11"	7'-1"	6'-2"	8'-6"	7'-7"	9'-10"	9'-2"	11'-8"	10'-10"
90	6'-3"	5'-10"	6'-11"	6'-0"	8'-4"	7'-5"	9'-8"	9'-0"	11'-6"	10'-8"
95	6'-2"	5'-8"	6'-9"	5'-10"	8'-3"	7'-2"	9'-6"	8'-10"	11'-4"	10'-7"
100	6'-1"	5'-6"	6'-7"	5'-9"	8'-1"	7'-0"	9'-5"	8'-9"	11'-2"	10'-5"

* STORM BAR SPACING SHALL BE SUCH THAT MAXIMUM SLAT SPAN SHALL NOT BE EXCEEDED.

FEB 14 2002

BUILDING CODE COMPLIANCE OFFICE

APPROVAL NO. 01-1115.04

MIAMI-DADE COUNTY

11/9/01

TILLECO INC.

TILLIT TESTING & ENGINEERING COMPANY

6595 N.W. 36th. St., Ste. 217 – VIRGINIA GARDENS, FL 33166

Phone : (305)871-1530 . Fax : (305)871-1531

EB 0006719

WALTER A. TILLIT Jr., P. E.

FLORIDA Lic. # 44167

ASSA/40mm BERTHA ROLL-UP

ALUTECH UNITED, INC.

(ASSA #68)

15 DIXON ST.

SELBYVILLE, DE. 19975

REV. No	DESCRIPTION	DATE	REV. No	DESCRIPTION	DATE
1	–	–	3		
2	–	–	4		

AS SHOWN SCALE

6/14/01 DATE

01-167 DRAWING No

SHEET 10 OF 12

HEADER LOADING CHART
MAXIMUM NEGATIVE DESIGN PRESSURE RATING "W" (p. s. f.) AND CORRESPONDING MAXIMUM SPAN "L" FOR A GIVEN TYPE OF HEADER.

(USE NEGATIVE PRESSURE VALUES AS PER ASCE 7-88)

MAXIMUM DESIGN LOAD "W" (p.s.f.)	TYPE 1 HEADER 2" x 3" X .125"		TYPE 2 HEADER 2" x 4" X .125"			TYPE 3 HEADER 2" x 4" X .250"					TYPE 4 HEADER 2" x 6" X .125"				
	STORM BAR HEIGHT		STORM BAR HEIGHT			STORM BAR HEIGHT					STORM BAR HEIGHT				
	≤ 5'-0"	5' TO 7'	≤ 5'-0"	5' TO 8'	8' TO 10'	≤ 6'-0"	6' TO 8'	8' TO 10'	10' TO 12'	12' TO 14'	≤ 6'-0"	6' TO 8'	8' TO 10'	10' TO 12'	12' TO 14'
40.0	11'-4"	9'-8"	13'-6"	11'-2"	10'-0"	14'-11"	13'-10"	13'-1"	12'-2"	11'-3"	16'-8"	15'-2"	13'-7"	12'-5"	11'-6"
45.0	10'-9"	9'-1"	13'-1"	10'-6"	9'-5"	14'-5"	13'-5"	12'-6"	11'-5"	10'-7"	16'-2"	14'-4"	12'-9"	11'-8"	10'-10"
50.0	10'-3"	8'-8"	12'-7"	10'-0"	8'-11"	14'-1"	13'-1"	11'-11"	10'-10"	10'-1"	15'-8"	13'-7"	12'-2"	11'-1"	10'-3"
55.0	9'-9"	8'-3"	12'-0"	9'-6"	8'-6"	13'-9"	12'-8"	11'-4"	10'-4"	9'-7"	14'-11"	12'-11"	11'-7"	10'-7"	9'-9"
60.0	9'-4"	7'-11"	11'-6"	9'-1"	8'-2"	13'-5"	12'-2"	10'-10"	9'-11"	9'-2"	14'-4"	12'-5"	11'-1"	10'-1"	9'-4"
65.0	8'-11"	7'-7"	11'-1"	8'-9"	7'-10"	13'-2"	11'-8"	10'-5"	9'-6"	8'-10"	13'-9"	11'-11"	10'-8"	9'-9"	9'-0"
70.0	8'-8"	7'-4"	10'-8"	8'-5"	7'-6"	12'-11"	11'-3"	10'-1"	9'-2"	8'-6"	13'-3"	11'-6"	10'-3"	9'-4"	8'-8"
75.0	8'-4"	7'-1"	10'-3"	8'-2"	7'-3"	12'-6"	10'-10"	9'-9"	8'-10"	8'-3"	12'-9"	11'-1"	9'-11"	9'-0"	8'-4"
80.0	8'-1"	6'-10"	10'-0"	7'-10"	7'-1"	12'-2"	10'-6"	9'-5"	8'-7"	7'-11"	12'-5"	10'-9"	9'-7"	8'-9"	8'-1"
85.0	7'-10"	6'-7"	9'-8"	7'-8"	6'-10"	11'-9"	10'-2"	9'-1"	8'-4"	7'-9"	12'-0"	10'-5"	9'-4"	8'-6"	7'-10"
90.0	7'-7"	6'-5"	9'-5"	7'-5"	6'-8"	11'-5"	9'-11"	8'-10"	8'-1"	7'-6"	11'-8"	10'-1"	9'-0"	8'-3"	7'-8"
95.0	7'-5"	6'-3"	9'-2"	7'-3"	6'-6"	11'-2"	9'-8"	8'-8"	7'-11"	7'-4"	11'-4"	9'-10"	8'-10"	8'-0"	7'-5"
100.0	7'-3"	6'-1"	8'-11"	7'-1"	6'-4"	10'-10"	9'-5"	8'-5"	7'-8"	7'-1"	11'-1"	9'-7"	8'-7"	7'-10"	7'-3"

ACCEPTED AS CONFORMING WITH THE
DADE FLORIDA BUILDING CODE
DATE FEB 14 2002
BY
PROJECT CONTROL DIVISION
BUILDING CODE COMPLIANCE OFFICE
ACCEPTANCE NO. 01-1115.04

MIAMI-DADE COUNTY

11/9/01

TILTECO INC.
TILLIT TESTING & ENGINEERING COMPANY
6595 N.W. 36th. St., Ste. 217 - VIRGINIA GARDENS, FL 33166
Phone : (305)871-1530 . Fax : (305)871-1531
EB 0006719
WALTER A. TILLIT Jr., P. E.
FLORIDA Lic. # 44167

ASSA/40mm BERTHA ROLL-UP

ALUTECH UNITED, INC.
(ASSA #68)
15 DIXON ST.
SELBYVILLE, DE. 19975

REV. No	DESCRIPTION	DATE	REV. No	DESCRIPTION	DATE
1	-	-	3		
2	-	-	4		

AS SHOWN SCALE
6/14/01 DATE
01-167 DRAWING No
SHEET 11 OF 12

MULLION LOADING CHART

MAXIMUM DESIGN PRESSURE RATING "W" (p. s. f.) AND CORRESPONDING MAXIMUM SPAN "L"(Ft) FOR A GIVEN TYPE OF MULLION AND MULLION SPACING (Ft.).

(USE NEGATIVE PRESSURE VALUES AS PER ASCE 7-88)

MAXIMUM DESIGN LOAD "W" (p.s.f.)	TYPE 1 MULLION 3" x 4" x .125"				TYPE 2 MULLION 4" x 4" x .250"				TYPE 3 MULLION 4" x 6" x .250"					
	MULLION SPACING				MULLION SPACING				MULLION SPACING					
	≤ 4'-0"	4' TO 5'	5' TO 6'	6' TO 8'	≤ 4'-0"	4' TO 5'	5' TO 6'	6' TO 8'	≤ 4'-0"	4' TO 5'	5' TO 6'	6' TO 8'	8' TO 10'	10' TO 12
40.0	9'-0"	8'-4"	7'-10"	8'-2"	11'-9"	10'-11"	10'-3"	10'-9"	16'-4"	15'-2"	14'-3"	14'-10"	13'-10"	13'-0"
45.0	8'-8"	8'-0"	7'-7"	7'-10'	11'-4"	10'-6"	9'-11"	10'-4"	15'-8"	14'-7"	13'-8"	14'-4"	13'-3"	12'-6"
50.0	8'-4"	7'-9"	7'-3"	7'-7"	10'-11"	10'-2"	9'-7"	9'-10"	15'-2"	14'-1"	13'-3"	13'-10"	12'-10"	12'-1"
55.0	8'-1"	7'-6"	7'-1"	7'-4"	10'-7"	9'-10"	9'-3"	9'-8"	14'-8"	13'-7"	12'-10"	13'-4"	12'-5"	11'-8"
60.0	7'-10"	7'-3"	6'-10"	7'-2"	10'-3"	9'-7"	9'-0"	9'-5"	14'-3"	13'-3"	12'-5"	13'-0"	12'-1"	11'-4"
65.0	7'-8"	7'-1"	6'-8"	7'-0"	10'-0"	9'-4"	8'-9"	9'-2"	13'-11"	12'-11"	12'-2"	12'-8"	11'-9"	11'-1"
70.0	7'-5"	6'-11"	6'-6"	6'-10"	9'-9"	9'-1"	8'-6"	8'-11"	13'-7"	12'-7"	11'-10"	12'-4"	11'-5"	10'-9"
75.0	7'-3"	6'-9"	6'-4"	6'-8"	9'-6"	8'-10"	8'-4"	8'-8"	13'-3"	12'-3"	11'-7"	12'-1"	11'-2"	10'-8"
80.0	7'-2"	6'-7"	6'-3"	6'-6"	9'-4"	8'-8"	8'-2"	8'-6"	12'-11"	12'-0"	11'-4"	11'-10"	10'-11"	10'-4"
85.0	7'-0"	6'-6"	6'-1"	6'-4"	9'-2"	8'-6"	8'-0"	8'-4"	12'-8"	11'-9"	11'-1"	11'-7"	10'-9"	10'-1"
90.0	6'-10"	6'-4"	6'-0"	6'-3"	8'-11"	8'-4"	7'-10"	8'-2"	12'-5"	11'-7"	10'-11"	11'-4"	10'-6"	9'-11"
95.0	6'-9"	6'-3"	5'-11"	6'-2"	8'-10"	8'-2"	7'-9"	8'-0"	12'-3"	11'-4"	10'-8"	11'-2"	10'-4"	9'-9"
100.0	6'-7"	6'-2"	5'-9"	6'-0"	8'-8"	8'-0"	7'-7"	7'-11"	12'-0"	11'-2"	10'-6"	10'-11"	10'-2"	9'-7"

NOTES : REFER TO ELEVATIONS ON SHEET 1 OF 12

1-. FOR MULLIONS INSTALLED W/O STORM BARS

A) MULLION SPACING SHALL BE SUCH THAT MAXIMUM SLAT SPAN SHALL NOT BE EXCEEDED

2-. FOR MULLIONS INSTALLED W/ STORM BARS & HEADERS

A) MULLION SPACING SHALL BE SUCH THAT MAXIMUM HEADER SPAN SHALL NOT BE EXCEEDED

B) STORM BAR SPACING SHALL BE SUCH THAT MAXIMUM SLAT SPAN SHALL NOT BE EXCEEDED

FILED AS BUILDING PLAN UNDER
SOUTH FLORIDA BUILDING CODE
DATE FEB 14 2002
BY
PRODUCT CONTROL DIVISION
MIAMI-DADE COMPLIANCE OFFICE
ACCEPTANCE NO. 01-1115.04
MIAMI-DADE COUNTY

11/9/01

TILTECO INC.
TILLIT TESTING & ENGINEERING COMPANY
6585 N.W. 38th. St., Ste. 217 - VIRGINIA GARDENS, FL 33166
Phone : (305)871-1530 . Fax : (305)871-1531
EB 0006719
WALTER A. TILLIT Jr., P. E.
FLORIDA Lic. # 44167

ASSA/40mm BERTHA ROLL-UP

ALUTECH UNITED, INC.
(ASSA #68)
15 DIXON ST.
SELBYVILLE, DE. 19975

REV. No	DESCRIPTION	DATE	REV. No	DESCRIPTION	DATE
1	-	-	3		
2	-	-	4		

AS SHOWN
SCALE

6/14/01
DATE

01-167
DRAWING No

SHEET 12 OF 12