MIAMI-DADE COUNTY, FLORIDA
METRO-DADE FLAGLER BUILDING

BUILDING CODE COMPLIANCE OFFICE
METRO-DADE FLAGLER BUILDING
140 WEST FLAGLER STREET, SUITE 1603
MIAMI, FLORIDA 33130-1563
(305) 375-2901 FAX (305) 375-2908

CONTRACTOR LICENSING SECTION
(305) 375-2527 FAX (305) 375-2558

CONTRACTOR ENFORCEMENT DIVISION
(305) 375-2966 FAX (305) 375-2908

PRODUCT CONTROL DIVISION
(305) 375-2902 FAX (305) 372-6339

PRODUCT CONTROL NOTICE OF ACCEPTANCE

Lawson Industries, Inc.
8501 NW 90 Street
Medley ,FL 33166

Your application for Notice of Acceptance (NOA) of:
Series 4000 Circle Top Aluminum Fixed Windows
under Chapter 8 of the Code of Miami-Dade County governing the use of Alternate Materials and Types of Construction, and completely described herein, has been recommended for acceptance by the Miami-Dade County Building Code Compliance Office (BCCO) under the conditions specified herein.

This NOA shall not be valid after the expiration date stated below. BCCO reserves the right to secure this product or material at any time from a jobsite or manufacturer's plant for quality control testing. If this product or material fails to perform in the approved manner, BCCO may revoke, modify, or suspend the use of such product or material immediately. BCCO reserves the right to revoke this approval, if it is determined by BCCO that this product or material fails to meet the requirements of the South Florida Building Code.

The expense of such testing will be incurred by the manufacturer.

ACCEPTANCE NO.: 01-1120.03
EXPIRES: 12/31/2006

Raul Rodriguez
Chief Product Control Division

THIS IS THE COVERSHEET, SEE ADDITIONAL PAGES FOR SPECIFIC AND GENERAL CONDITIONS
BUILDING CODE & PRODUCT REVIEW COMMITTEE

This application for Product Approval has been reviewed by the BCCO and approved by the Building Code and Product Review Committee to be used in Miami-Dade County, Florida under the conditions set forth above.

Francisco J. Quintana, R.A.
Director
Miami-Dade County
Building Code Compliance Office

APPROVED: 12/27/2001

NOTICE OF ACCEPTANCE: SPECIFIC CONDITIONS

1. SCOPE

1.1 This **renews** Notice of Acceptance (NOA) No. **98-0928.02**, which was issued on January 7, 1999. It renews the approval of n aluminum fixed window, as described in Section 2 of this NOA, designed to comply with the South Florida Building Code (SFBC), 1994 Edition for Miami-Dade County, for the locations where the pressure requirements, as determined by SFBC Chapter 23, do not exceed the Design Pressure Rating values indicated in the approved drawings.

2. PRODUCT DESCRIPTION

2.1 The **Series "4000" Circled Top Aluminum Fixed Window with and without True Muntin** and its components shall be constructed in strict compliance with the following document: Drawing No **W96-13**, Sheets 1 through 2 of 2, titled "Series 4000 Circle Top Window," prepared by Al Farooq Corporation, dated 4/15/96 and revised on 11/10/01, signed and sealed by Humayoun Farooq, P.E., bearing the Miami-Dade County Product Control renewal stamp with the NOA number and expiration date by the Miami-Dade County Product Control Division. This document shall hereinafter be referred to as the approved drawings.

3. LIMITATIONS

3.1 This approval applies to single unit applications only, as shown in approved drawings.

4. INSTALLATION

4.1 The aluminum fixed window and its components shall be installed in strict compliance with the approved drawings.

4.2 The installation of this product **will require** a hurricane protection system

5. LABELING

5.1 Each unit shall bear a permanent label with the manufacturer's name or logo, city, state and following statement: "Miami-Dade County Product Control Approved".

6. BUILDING PERMIT REQUIREMENTS

6.1 Application for building permit shall be accompanied by copies of the following:

6.1.1 This Notice of Acceptance

6.1.2 Duplicate copies of the approved drawings, as identified in Section 2 of this Notice of Acceptance, clearly marked to show the components selected for the proposed installation.

6.1.3 Any other documents required by the Building Official or the South Florida Building Code (SFBC) in order to properly evaluate the installation of this system.

Raul Rodriguez, Chief
Product Control Division

Lawson Industries, Inc.

ACCEPTANCE No.: **01-1120.03**

APPROVED: **December 27, 2001**

EXPIRES: **December 31, 2006**

NOTICE OF ACCEPTANCE: STANDARD CONDITIONS

1. Renewal of this Acceptance (approval) shall be considered after a renewal application has been filed and the original submitted documentation, including test supporting data, engineering documents, are no older than eight (8) years.

2. Any and all approved products shall be permanently labeled with the manufacturer's name, city, state, and the following statement: "Miami-Dade County Product Control Approved", or as specifically stated in the specific conditions of this Acceptance.

3. Renewals of Acceptance will not be considered if:
   a) There has been a change in the South Florida Building Code affecting the evaluation of this product and the product is not in compliance with the code changes;
   b) The product is no longer the same product (identical) as the one originally approved;
   c) If the Acceptance holder has not complied with all the requirements of this acceptance, including the correct installation of the product;
   d) The engineer who originally prepared, signed and sealed the required documentation initially submitted is no longer practicing the engineering profession.

4. Any revision or change in the materials, use, and/or manufacture of the product or process shall automatically be cause for termination of this Acceptance, unless prior written approval has been requested (through the filing of a revision application with appropriate fee) and granted by this office.

5. Any of the following shall also be grounds for removal of this Acceptance:
   a) Unsatisfactory performance of this product or process.
   b) Misuse of this Acceptance as an endorsement of any product, for sales, advertising or any other purpose.

6. The Notice of Acceptance number preceded by the words Miami-Dade County, Florida, and followed by the expiration date may be displayed in advertising literature. If any portion of the Notice of Acceptance is displayed, then it shall be done in its entirety.

7. A copy of this Acceptance as well as approved drawings and other documents, where it applies, shall be provided to the user by the manufacturer or its distributors and shall be available for inspection at the job site at all time. The engineer need not reseal the copies.

8. Failure to comply with any section of this Acceptance shall be cause for termination and removal of Acceptance.

9. This Notice of Acceptance consists of pages 1, 2 and this last page 3.

END OF THIS ACCEPTANCE

Raul Rodriguez, Chief
Product Control Division

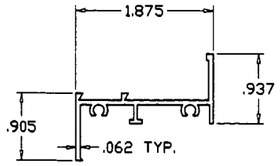

FRAME
6063-T5

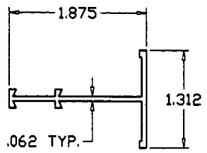

MUNTIN FRAME
6063-T5

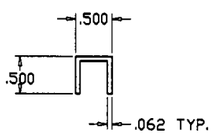

GLAZING CHANNEL
6063-T5

DESIGN LOAD CAPACITY - PSF							
WINDOW DIMS.		DSB - ANNEALED		3/16" - ANNEALED		3/16"-ANN. (TRUE MUNTIN)	
WIDTH	HEIGHT	EXT. (+)	INT. (-)	EXT. (+)	INT. (-)	EXT. (+)	INT. (-)
37"	18-1/2"	59.5	59.5	93.3	93.3	61.0	61.0
48"	24"	35.6	35.6	70.4	70.4	61.0	61.0
53-1/8"	26-9/16"	30.7	30.7	56.3	56.3	61.0	61.0
60"	30"	-	-	43.2	43.2	61.0	61.0
74"	37"	-	-	29.0	29.0	61.0	61.0
96"	48"	-	-	-	-	53.1	53.1

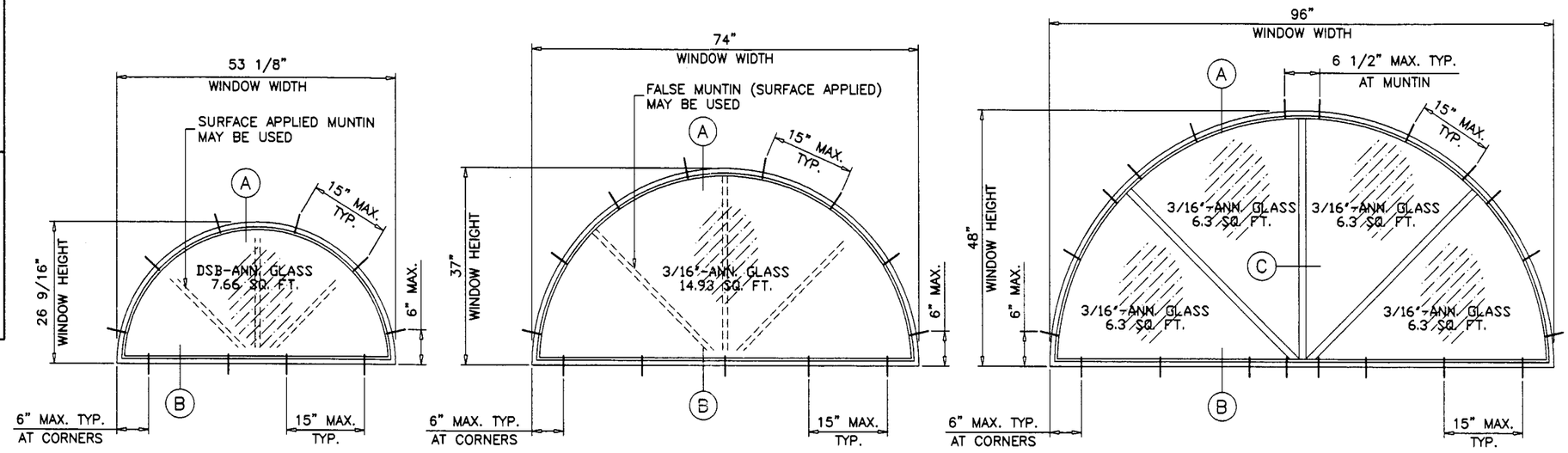

TYPICAL ELEVATIONS
TESTED UNITS

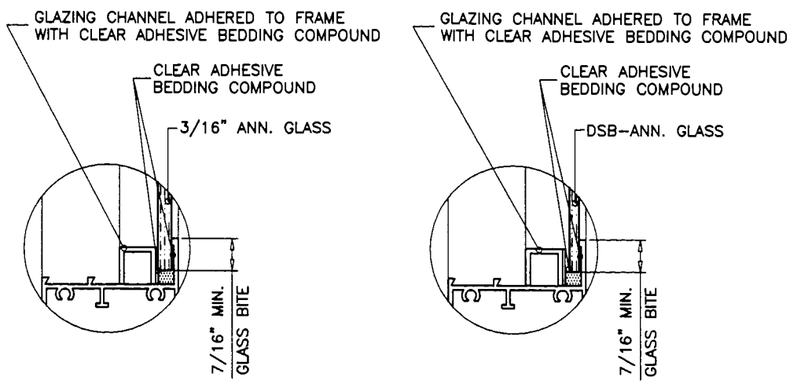

GLAZING OPTIONS

NOTES:

1. THIS STRUCTURE IS DESIGNED AS PER THE SOUTH FLORIDA BUILDING CODE 1994 EDITION FOR DADE COUNTY. ALSO FOR WIND LOADS AS PER ASCE 7 USING CORRESPONDING LOADS.
2. WOOD BUCKS BY OTHERS, MUST BE ANCHORED PROPERLY TO TRANSFER LOADS TO THE STRUCTURE.
3. ANCHORS SHALL BE AS LISTED, SPACED AS SHOWN ON DETAILS. ANCHOR EMBEDMENT TO BASE MATERIAL SHALL BE BEYOND WALL DRESSING OR STUCCO.

WINDOWS TO BE PROTECTED WITH DADE COUNTY APPROVED IMPACT RESISTANT SHUTTERS

Engr: DR. HUMAYOUN FAROOQ
STRUCTURES
FLA. PE # 16557

PRODUCT RENEWED

ACCEPTANCE No. 01-1120.03

EXPIRATION DATE December 31, 2006

By

PRODUCT CONTROL DIVISION
BUILDING CODE COMPLIANCE OFFICE

AL-FAROOQ CORPORATION
ENGINEERS, PLANNERS & PRODUCT DESIGN
1235 SW 87 AVE
MIAMI, FLORIDA 33174
TEL. (305) 264-8100 FAX. (305) 262-6978
COMP-ANL\W96-13J

SERIES 4000 CIRCLE TOP WINDOW

LAWSON INDUSTRIES
8501 N.W. 90TH STREET
MEDLEY, FL. 33166
TEL. (305) 696-8660 FAX. (305) 696-6006

revisions:

no	date	by	description
A	6.24.96	H	GLASS W/ MUNTIN ADD.
B	11.28.98	H	GENERAL REVISION
C	11.10.01	H	CHART REV. PER ASTM E-1300

date: 04-15-96
scale: 1/2" = 1"
dr. by: HAMID
chk. by:

drawing no.
W96-13

sheet 1 of 2

WOOD BUCKS NOT BY LAWSON IND., MUST SUSTAIN LOADS IMPOSED BY GLAZING SYSTEM AND TRANSFER THEM TO THE BUILDING STRUCTURE.

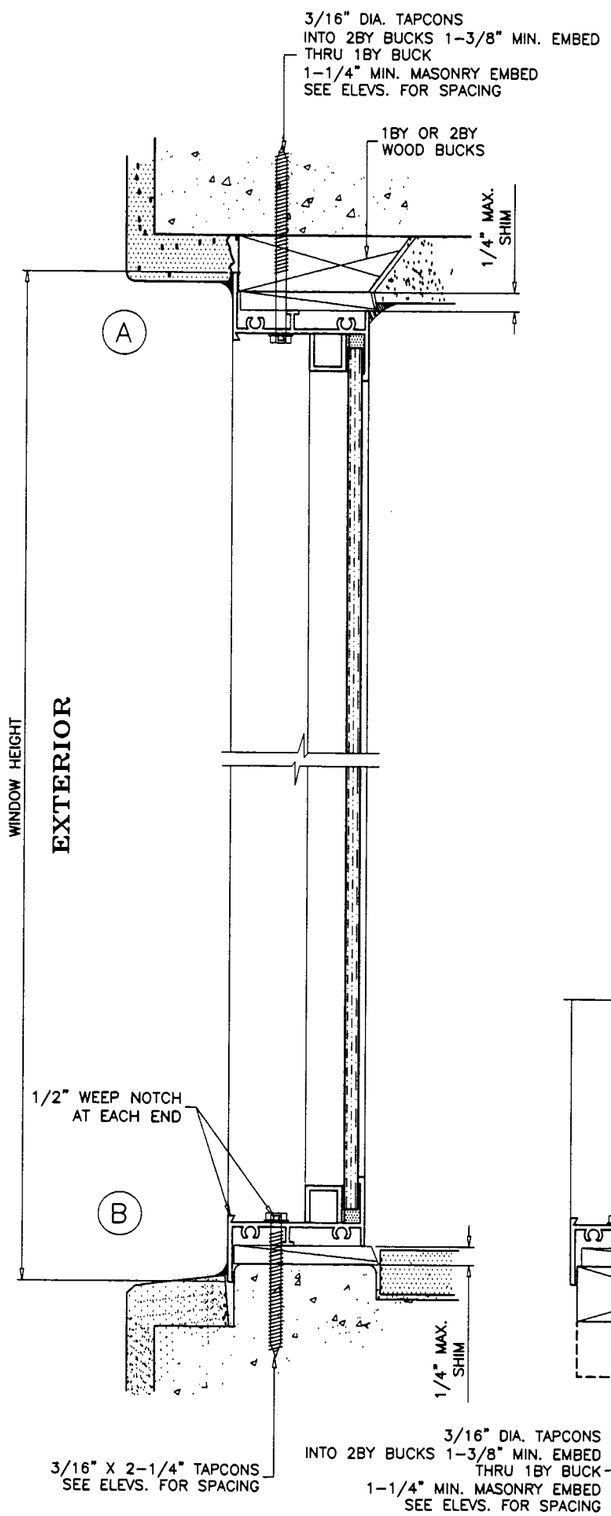

SEALANT:

FRAME CORNERS, PERIMETER OF GLAZING BEAD AND INSTALLATION SCREWS SEALED WITH ALUMINUM COLORED SEALANT.

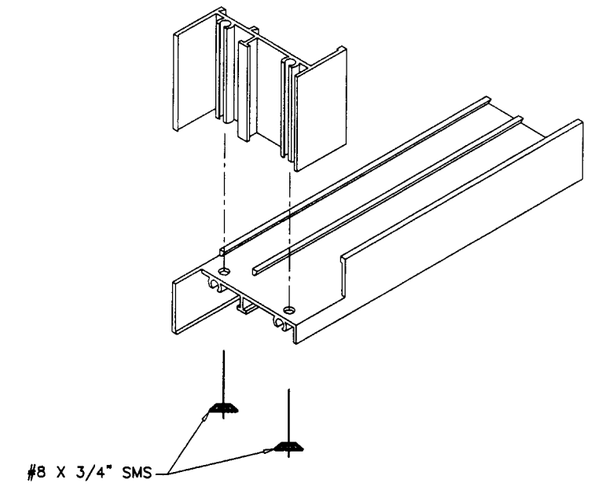

FRAME CORNER

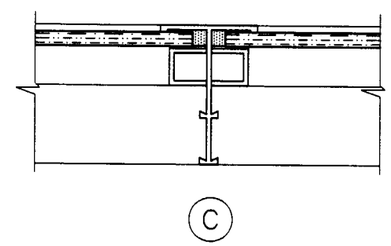

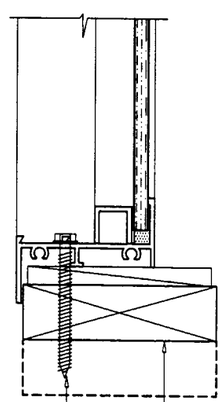

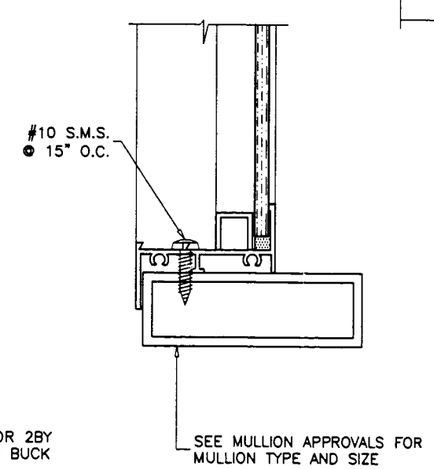

Engr: DR. HUMAYOUN FAROOQ
STRUCTURES
FLA. PE # 16557

PRODUCT RENEWED

ACCEPTANCE No. 01-1120.03

EXPIRATION DATE December 31, 2006

By

PRODUCT CONTROL DIVISION
BUILDING CODE COMPLIANCE OFFICE

AL-FAROOQ CORPORATION
ENGINEERS, PLANNERS & PRODUCT DESIGN
1235 SW 87 AVE
MIAMI, FLORIDA 33174
TEL. (305) 264-8100 FAX. (305) 262-6978
COMP-ANL\W96-13LI

SERIES 4000 CIRCLE TOP WINDOW

LAWSON INDUSTRIES
8501 N.W. 90TH STREET
MEDLEY, FL. 33166
TEL. (305) 696-8660 FAX. (305) 696-6006

revisions:			
no	date	by	description

date: 04-15-96
scale: 1/2" = 1"
dr. by: HAMID
chk. by:

drawing no. W96-13

sheet 2 of 2