MIAMI-DADE

BUILDING CODE COMPLIANCE OFFICE (BCCO)
PRODUCT CONTROL DIVISION

MIAMI-DADE COUNTY, FLORIDA
METRO-DADE FLAGLER BUILDING
140 WEST FLAGLER STREET, SUITE 1603
MIAMI, FLORIDA 33130-1563
(305) 375-2901 FAX (305) 375-2908

NOTICE OF ACCEPTANCE (NOA)

YKK AP America, Inc.
5630 Gwaltney Drive,
Atlanta, Georgia 30336

SCOPE:
This NOA is being issued under the applicable rules and regulations governing the use of construction materials. The documentation submitted has been reviewed by Miami-Dade County Product Control Division and accepted by the Board of Rules and Appeals (BORA) to be used in Miami Dade County and other areas where allowed by the Authority Having Jurisdiction (AHJ).

This NOA shall not be valid after the expiration date stated below. The Miami-Dade County Product Control Division (In Miami Dade County) and/or the AHJ (in areas other than Miami Dade County) reserve the right to have this product or material tested for quality assurance purposes. If this product or material fails to perform in the accepted manner, the manufacturer will incur the expense of such testing and the AHJ may immediately revoke, modify, or suspend the use of such product or material within their jurisdiction. BORA reserves the right to revoke this acceptance, if it is determined by Miami-Dade County Product Control Division that this product or material fails to meet the requirements of the applicable building code.

This product is approved as described herein, and has been designed to comply with the High Velocity Hurricane Zone of the Florida Building Code.

DESCRIPTION: Series "YHC-300 I G " Aluminum Curtain Wall System

APPROVAL DOCUMENT: Drawing No. **YHC300 IG-130S**, titled "Series YHC300 I. G. 130psf Hurricane C. W. ", sheets 1 through 19 of 19, prepared by manufacturer, dated 08-22-01 and last revised on 01-22-02, bearing the Miami-Dade County Product Control Approval stamp with the Notice of Acceptance number and approval date by the Miami-Dade County Product Control Division.

MISSILE IMPACT RATING: Small Missile Impact Resistant

LABELING: Each unit shall bear a permanent label with the manufacturer's name or logo, city, state and following statement: "Miami-Dade County Product Control Approved", unless otherwise noted herein.

RENEWAL of this NOA shall be considered after a renewal application has been filed and there has been no change in the applicable building code negatively affecting the performance of this product.

TERMINATION of this NOA will occur after the expiration date or if there has been a revision or change in the materials, use, and/or manufacture of the product or process. Misuse of this NOA as an endorsement of any product, for sales, advertising or any other purposes shall automatically terminate this NOA. Failure to comply with any section of this NOA shall be cause for termination and removal of NOA.

ADVERTISEMENT: The NOA number preceded by the words Miami-Dade County, Florida, and followed by the expiration date may be displayed in advertising literature. If any portion of the NOA is displayed, then it shall be done in its entirety.

INSPECTION: A copy of this entire NOA shall be provided to the user by the manufacturer or its distributors and shall be available for inspection at the job site at the request of the Building Official.
This NOA **01-1120.05** and consists of this page 1 as well as approval document mentioned above.
The submitted documentation was reviewed by **Ishaq I. Chanda, P. E.**

PRODUCT CONTROL ACCEPTED

REV.	DESCRIPTION	BY	DATE
A	AS PER DADE CO. REVIEW	RTB	1/22/02

INDEX OF DRAWINGS

TYPES	CONTENTS	SHEET #
GENERAL	COVER SHT. & GENERAL NOTES	1
ELEVATIONS	ELEVATIONS KEYED TO SINGLE GLAZING DETAILS	2
GEN. DETAILS	TYPICAL GENERAL DETAILS	3
DETAILS FOR SINGLE GLAZING	VERTICAL DETAILS	4
	TYPICAL DETAILS	5
SECTION & ANCHOR DETAILS	HEAD ANCHOR OPTIONS	6
	SILL ANCHOR OPTIONS	7
	SPLICE & ANCHOR CLIP	8,9,10
	MID-ANCHOR CLIP	11,12,13
MATERIAL LIST	BILL OF MATERIALS FOR SINGLE GLAZING	14
BOLT SELECTION GUIDE	NOTES & INSTRUCTIONS ON GUIDE	15
	CHARTS GUIDE FOR 'F' ANCHOR IN CONCRETE	16
	CHARTS GUIDE FOR 'F' ANCHOR IN STEEL	17
	CHARTS GUIDE FOR 'T' ANCHOR IN CONCRETE	18
	CHARTS GUIDE FOR 'T' ANCHOR IN STEEL	19

YHC-300 IG HURRICANE CURTAIN WALL

SMALL MISSILE IMPACT RATED @ 130 PSF DESIGN PRESSURE.

(SEE SEPARATE NOA FOR LARGE MISSILE AND/OR LOWER PRESSURE RATINGS.)

GENERAL NOTES:

1. REFER TO ANCHOR SCHEDULE ON ELEVATION SHEETS FOR ANCHOR TYPE IDENTIFICATION.
2. (A) MAXIMUM DESIGN PRESSURE RATING IS +130 PSF, -130 PSF.
3. THE SYSTEM AS SHOWN HEREIN MEETS THE SMALL IMPACT PROJECTION REQUIREMENTS PER THE SOUTH FLORIDA BUILDING CODE AND NO SHUTTERS ARE REQUIRED FOR INSTALLATIONS ABOVE 30 FT. FROM GRADE (SEE SEPARATE LARGE MISSILE NOA FOR INSTALLATIONS UP TO 30 FT. OF GRADE.)
4. ALUMINUM ALLOY ON ALL STRUCTURAL MEMBERS SHALL BE 6063-T5 WITH A MINIMUM YIELD STRENGTH OF 23KSI. ALL PRODUCTS WITH THE MARKING "YKK AP AMERICA" AND "DADE COUNTY PRODUCT APPROVED" ARE IN COMPLIANCE WITH THIS SPECIFICATION FOR STRUCTURAL MEMBERS.
5. (A) MAXIMUM GLASS SIZE SHALL NOT EXCEED 58 1/2" IN WIDTH OR 96" IN HEIGHT. ALL GLASS TYPE LISTED BELOW MUST COMPLY WITH ASTM E-1300-98. TO DETERMINE IF HEAT STRENGTHENED, OR TEMPERED GLASS IS REQUIRED, BASED ON AREA OF GLASS AND APPLICABLE WIND LOAD, PLEASE REFER TO TABLES ASTM E-1300-98. HOWEVER, OTHER CONSIDERATIONS OF THE BUILDING CODE, REGARDING THE USE OF SAFETY GLASS, ETC. SHALL BE APPLIED AS NECESSARY. ALSO, GLASS MANUFACTURERS SHALL BE CONSULTED FOR THEIR RECOMMENDATIONS.
6. SHOP DRAWINGS PREPARED, BASED ON THIS APPROVAL AND TAKING INTO ACCOUNT THE SPECIFIC JOB CONDITIONS, SHALL BE SUBMITTED TO THE BUILDING OFFICIAL AS PART OF THE PERMIT DOCUMENTS.
7. GLASS TO METAL ADHESIVE SHALL BE DOW 795 AS SHOWN ON DETAILS
8. (A) STRUCTURAL STEEL NOTED ON THESE DRAWINGS AS "STEEL BY OTHERS" MUST WITHSTAND THE LOADS IMPOSED BY THE CURTAIN WALL SYSTEM.
9. (A) ALL STEEL IN CONTACT WITH ALUMINUM TO BE PAINTED OR PLATED.

GLAZING DETAILS FOR ACCEPTED GLASS CONFIGURATIONS:

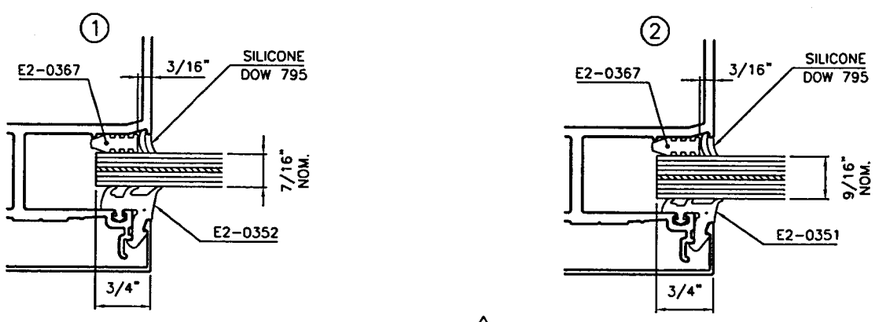

EXTERIOR (A)

ALL GLASS TYPES TO BE USED WITH THIS PRODUCT MUST COMPLY W/ASTM E1300-98 (A)

(SEE NOTE 5 ABOVE)

GLASS TYPE	DESCRIPTION	OVERALL NOMINAL THICKNESS	GLASS THICKNESS PER ASTM E-1300	GLAZING DETAIL	GLASS STR. QUALIFIED
O	7/16" LAMINATED (3/16" GLASS + 0.060"PVB* + 3/16" GLASS)	7/16"	3/8"	1	HEAT STR. TEMPERED
P	9/16" LAMINATED (1/4" GLASS + 0.060"PVB* + 1/4" GLASS)	9/16"	1/2"	2	HEAT STR. TEMPERED

(*) SPECIFIC PVB COMPONENT ACCEPTED: "BUTACIDE" BY DU PONT AND "SAFLEX" BY SOLUTIA.

Approved as complying with the Florida Building Code
Date APRIL 25, 2002
NOA# 01-1120.05
Miami Dade Product Control Division
By Shaq I. Chaudc

RESERVED FOR METRO-DADE USE ONLY

YKK AP America
YKK AP AMERICA, INC.
5630 GWALTNEY DRIVE
ATLANTA, GEORGIA 30336

SYSTEM	SCALE
YHC 300 I.G. 130PSF C.W.	NONE

DESCRIPTION: TABLE OF CONTENTS & NOTES

DRAWING NUMBER	REV.
YHC300 IG-130S	A

APPROVED BY	DRAWN BY	DATE	SHEET NO.
JIA	RTB	8/22/01	1 of 19

G:\SYSDWGS\YHC300IG\DADE\130PSF\C300I130S01.DWG

REV.	DESCRIPTION	BY	DATE
A	AS PER DADE CO. REVIEW	RTB	1/22/02

YHC 300 IG SYSTEM (130psf) SMALL MISSILE

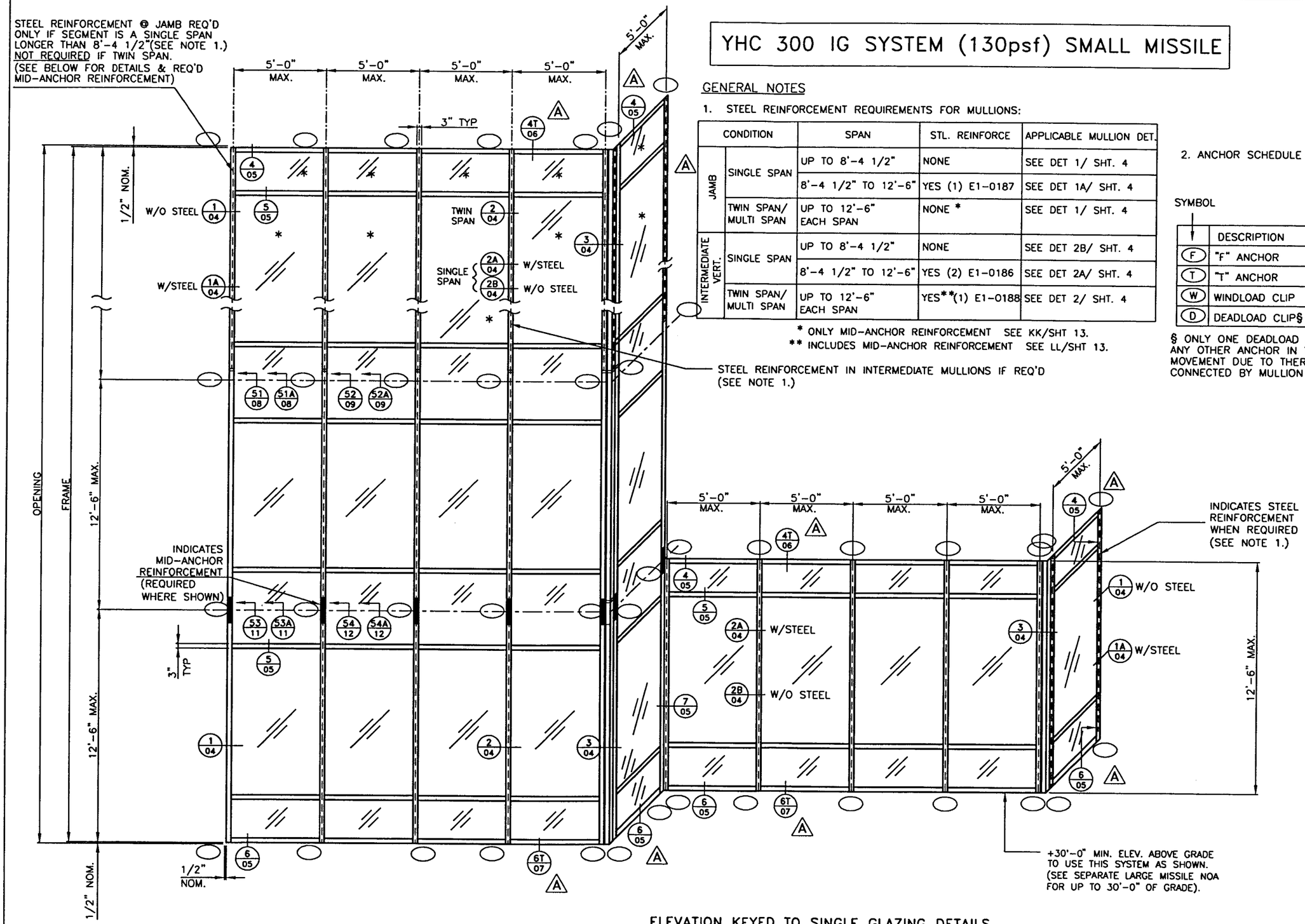

ELEVATION KEYED TO SINGLE GLAZING DETAILS

SCALE 3/16" = 1' - 0"

GENERAL NOTES

1. STEEL REINFORCEMENT REQUIREMENTS FOR MULLIONS:

CONDITION		SPAN	STL. REINFORCE	APPLICABLE MULLION DET.
JAMB	SINGLE SPAN	UP TO 8'-4 1/2"	NONE	SEE DET 1/ SHT. 4
		8'-4 1/2" TO 12'-6"	YES (1) E1-0187	SEE DET 1A/ SHT. 4
	TWIN SPAN/ MULTI SPAN	UP TO 12'-6" EACH SPAN	NONE *	SEE DET 1/ SHT. 4
INTERMEDIATE VERT.	SINGLE SPAN	UP TO 8'-4 1/2"	NONE	SEE DET 2B/ SHT. 4
		8'-4 1/2" TO 12'-6"	YES (2) E1-0186	SEE DET 2A/ SHT. 4
	TWIN SPAN/ MULTI SPAN	UP TO 12'-6" EACH SPAN	YES**(1) E1-0188	SEE DET 2/ SHT. 4

* ONLY MID-ANCHOR REINFORCEMENT SEE KK/SHT 13.
** INCLUDES MID-ANCHOR REINFORCEMENT SEE LL/SHT 13.

2. ANCHOR SCHEDULE

SYMBOL	DESCRIPTION	SILL @ JAMB	SILL @ MULLION	HEAD @ JAMB	HEAD @ MULLION	INTERM. FLOOR @ JAMB	INTERM. FLOOR @ MULLION	REF. DET'S
F	"F" ANCHOR	•		•				BB/6, DD/7
T	"T" ANCHOR		•		•			CC/6, EE/7
W	WINDLOAD CLIP			•(1)	•(2)	•(1)	•(2)	51/8, 52/9 53A/11, 54A.12
D	DEADLOAD CLIP§					•(1)	•(2)	51A/8, 52A/9 53/11, 54/12

§ ONLY ONE DEADLOAD APPLICATION PER MULLION/JAMB SEGMENT, ANY OTHER ANCHOR IN THE SAME SEGMENT SHALL ALLOW FREE MOVEMENT DUE TO THERMAL EXPANSION. SEGMENTS SHALL BE CONNECTED BY MULLION SPLICE AS SHOWN ON SHEETS 8-10.

Approved as complying with the Florida Building Code
Date APRIL 25, 2002
NOA# 01-1125.05
Miami Dade Product Control Division
By Ishaq I. Chanda

RESERVED FOR METRO-DADE USE ONLY

YKK AP America
YKK AP AMERICA, INC.
5630 GWALTNEY DRIVE
ATLANTA, GEORGIA 30336

SYSTEM	SCALE
YHC 300 I.G. (130psf)	1/2
DESCRIPTION: ELEVATION	
DRAWING NUMBER: YHC 300 I.G.-130S	REV. A

APPROVED BY	DRAWN BY	DATE	SHEET NO.
J.I.A.	B.C.M.	8/22/01	2 of 19

G:\SYSDWGS\YHC300IG\DADE\130PSF\C300I130S02.DWG

REV.	DESCRIPTION	BY	DATE
A	AS PER DADE CO. REVIEW	RTB	1/22/02

TYPICAL CONNECTION DETAIL

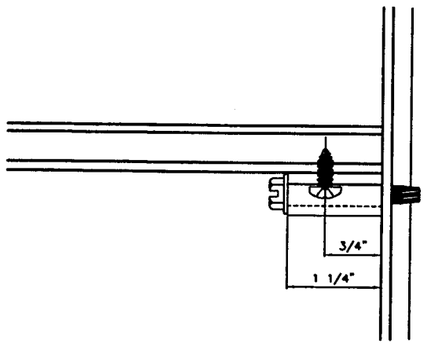

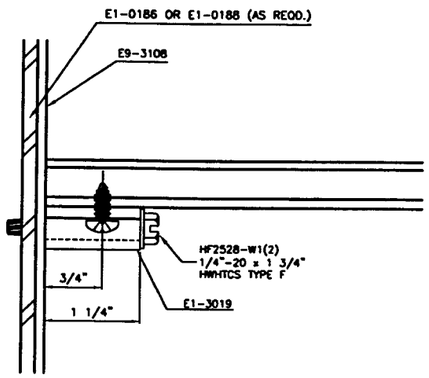

SECTION (A-A)

EXTERIOR (A)

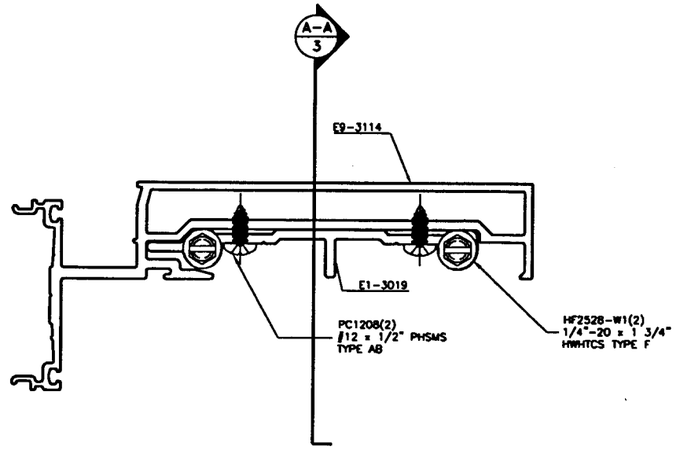

SECTION
CONNECTION "HORIZ.-VERT."

TYPICAL SEALING DETAILS

EXTERIOR (A)

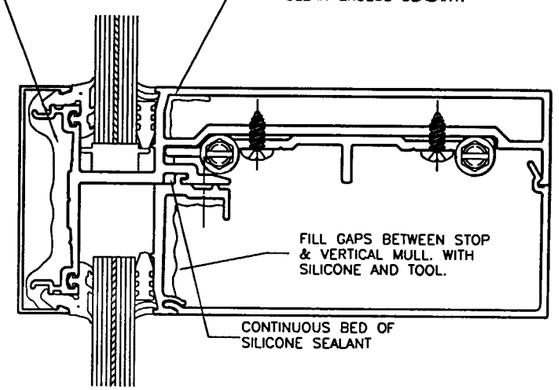

HORIZONTAL TO VERTICAL

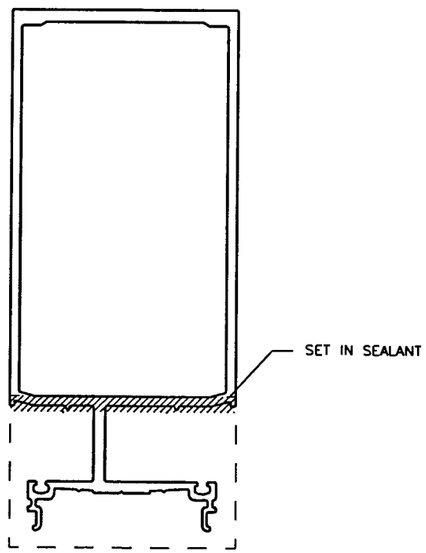

MULLION END CAP

(APPLY BEFORE MULLION ERECTION.)

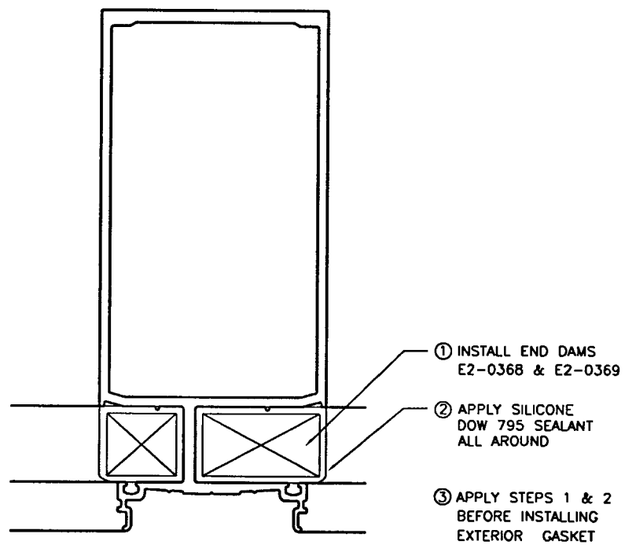

END DAM @ END OF
HORIZ. HEAD & SILL

Approved as complying with the
Florida Buiding Code
Date APRIL 25, 2002
NOA# 01-1120.05
Miami Dade Product Control
Division
By Ishaq I. Chanda

YKK AP America

SYSTEM	SCALE
YHC300 IG (130psf)	1/2

DESCRIPTION: TYPICAL GENERAL DETAILS

DRAWING NUMBER	REV.
YHC 300 IG-130S	A

APPROVED BY	DRAWN BY	DATE	SHEET NO.
JIA	RTB	8/22/01	3 OF 19

G:\SYSDWGS\YHC300IG\DADE\130PSF\C300I130S03.DWG

REV.	DESCRIPTION	BY	DATE
A	AS PER DADE CO. REVIEW	RTB	1/22/02

SECTION 1

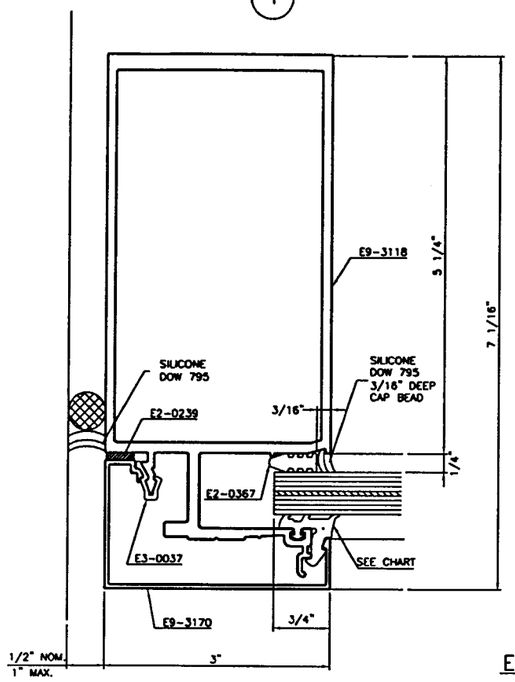

SECTION 2

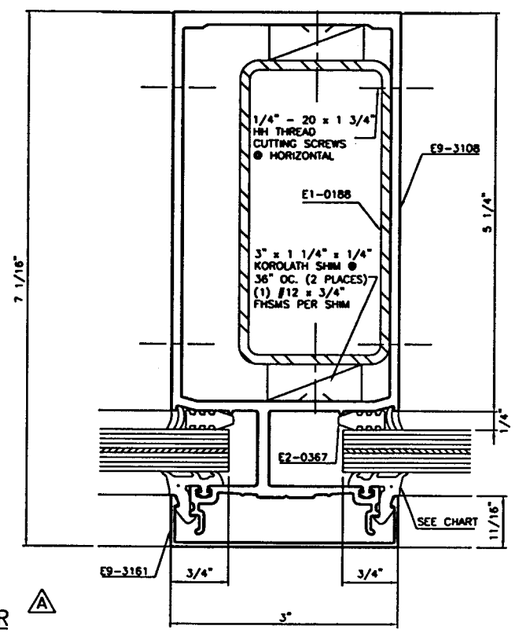

EXTERIOR (A)

SECTION 1A

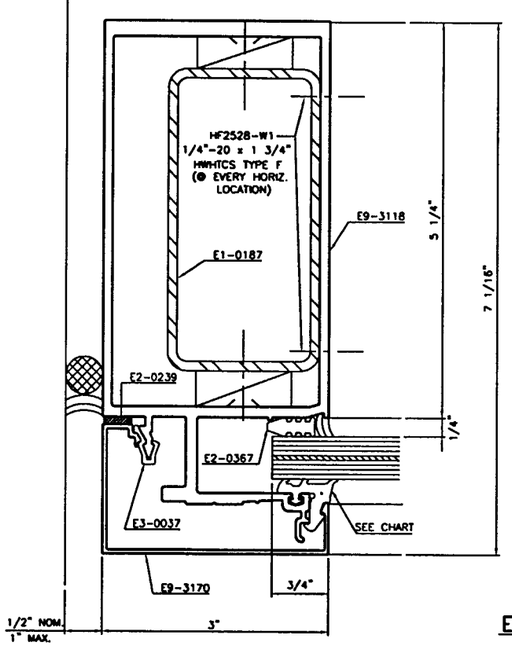

SECTION 2A

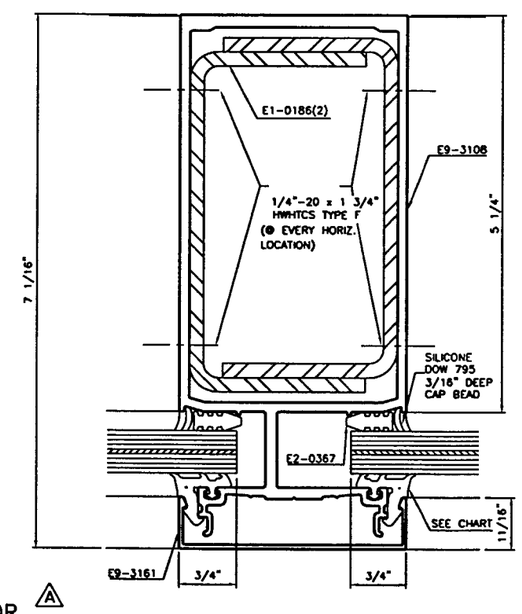

EXTERIOR (A)

SECTION 3

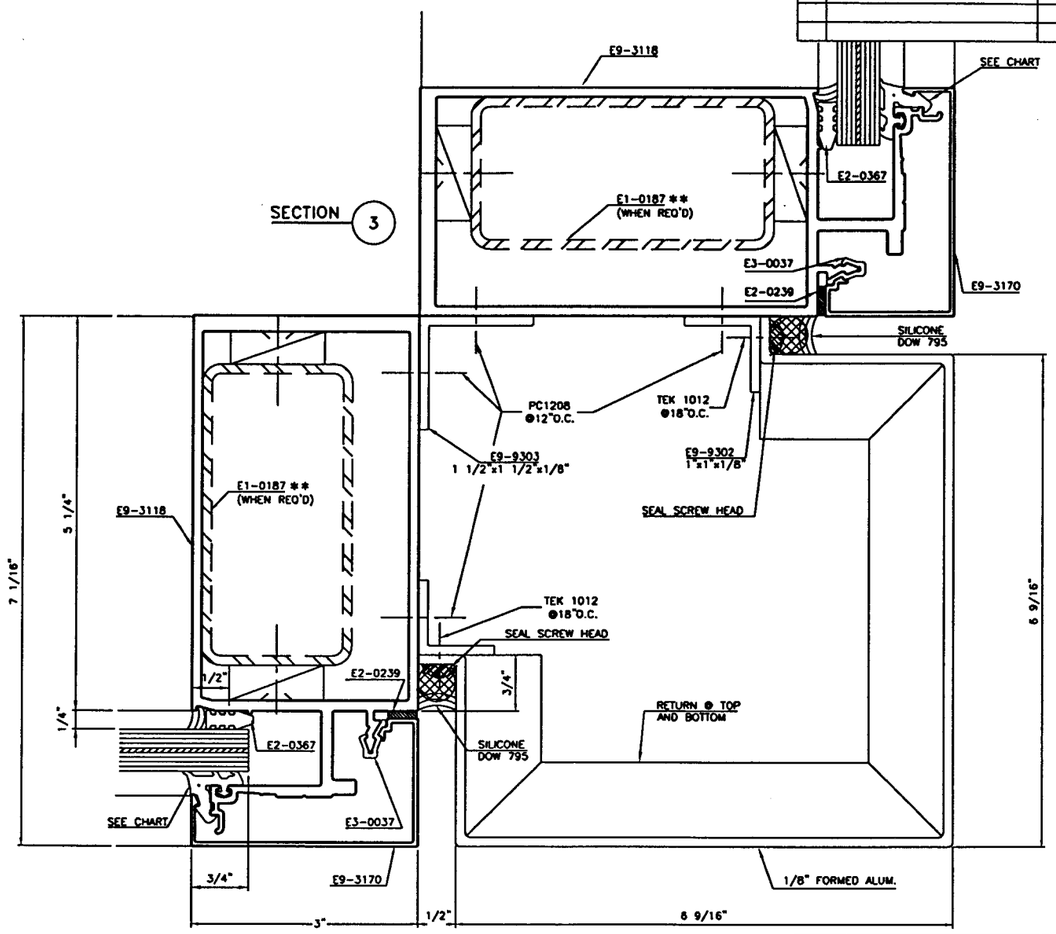

EXTERIOR (A)

SECTION 2B

SAME AS SECTION 2A BUT W/O STEEL REINFORCING.

NOTES:

1. EXTERIOR GASKET CHART:

NOM. THICKNESS	USE:
7/16" GLASS	E2-0352
9/16" GLASS	E2-0351

** 2. REINFORCEMENT E1-0187 IN CORNER DETAIL (3) REQUIRED ONLY FOR SINGLE SPAN INSTALLATION TALLER THAN 8'-4 1/2".

Approved as complying with the Florida Building Code
Date APRIL 25, 2002
NOA# 01-1120.05
Miami Dade Product Control Division
By Ishay I. Chandra

RESERVED FOR METRO-DADE USE ONLY

YKK AP America

YKK AP AMERICA, INC.
5630 GWALTNEY DRIVE
ATLANTA, GEORGIA 30336

SYSTEM	SCALE
YHC 300 I.G. (130psf)	1/2

DESCRIPTION: VERTICAL DETAILS

DRAWING NUMBER	REV.
YHC 300 IG-130S	A

APPROVED BY	DRAWN BY	DATE	SHEET NO.
JIA	RTB	8/22/01	4 of 19

G:\SYSDWGS\YHC300IG\DADE\130PSF\C300I130S04.DWG

REV.	DESCRIPTION	BY	DATE
A	AS PER DADE CO. REVIEW	RTB	1/22/02

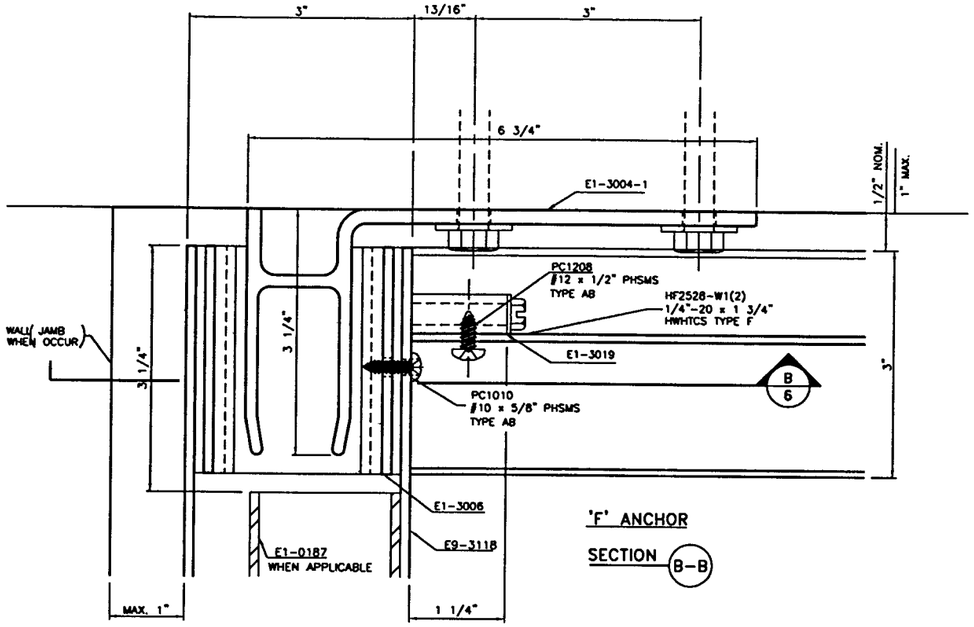

'F' ANCHOR

SECTION B-B

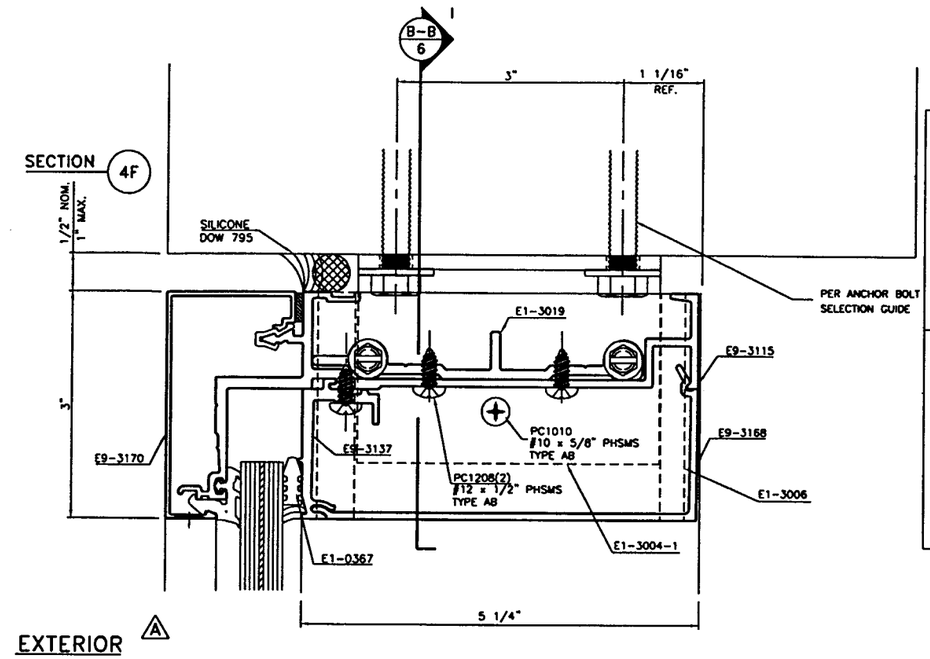

EXTERIOR A

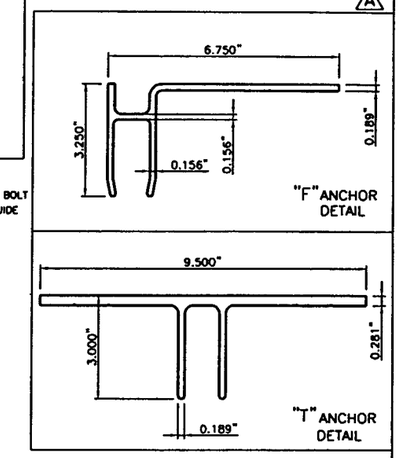

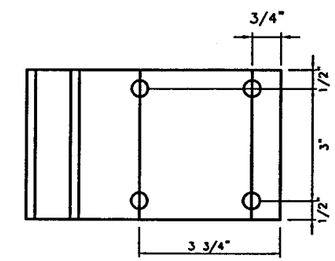

'F' ANCHOR

SECTION B

SCALE 1/4

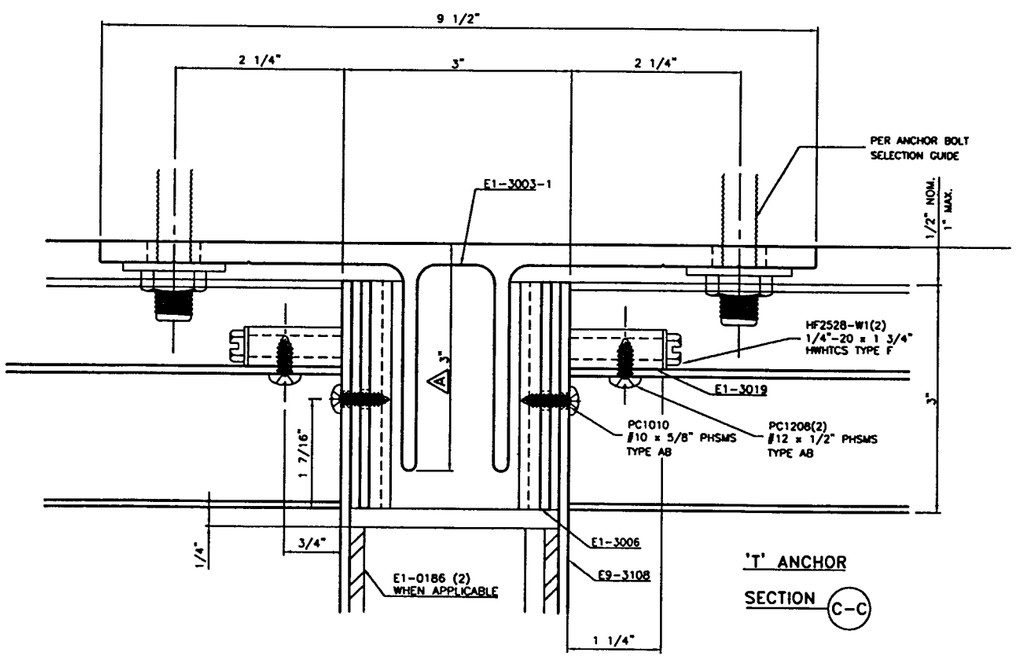

'T' ANCHOR

SECTION C-C

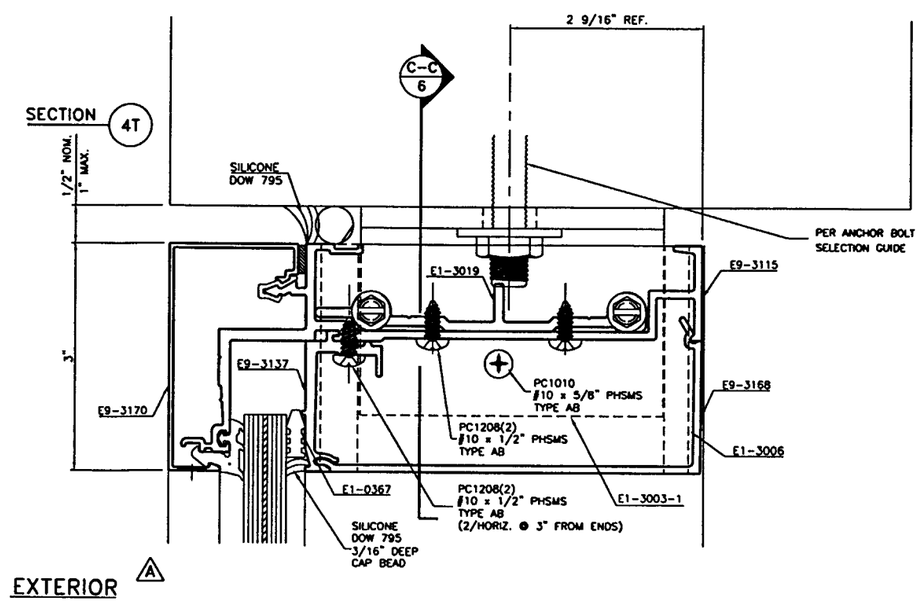

EXTERIOR A

Approved as complying with the
Florida Buiding Code
Date APRIL 25, 2002
NOA# 01-1128.05
Miami Dade Product Control
Division
By Ishaq I. Chanda

RESERVED FOR METRO-DADE USE ONLY

YKK AP AMERICA, INC.
5630 GWALTNEY DRIVE
ATLANTA, GEORGIA 30336

SYSTEM	SCALE
YHC 300 I.G. (130psf)	1/2

DESCRIPTION: HEAD ANCHOR DETAILS

DRAWING NUMBER	REV.
YHC 300 IG-130S	A

APPROVED BY	DRAWN BY	DATE	SHEET NO.
JIA	RTB	8/22/01	6 of 19

G:\SYSDWGS\YHC300IG\DADE\130PSF\C300I130S06.DWG

REV.	DESCRIPTION	BY	DATE
A	AS PER DADE CO. REVIEW	RTB	1/22/02

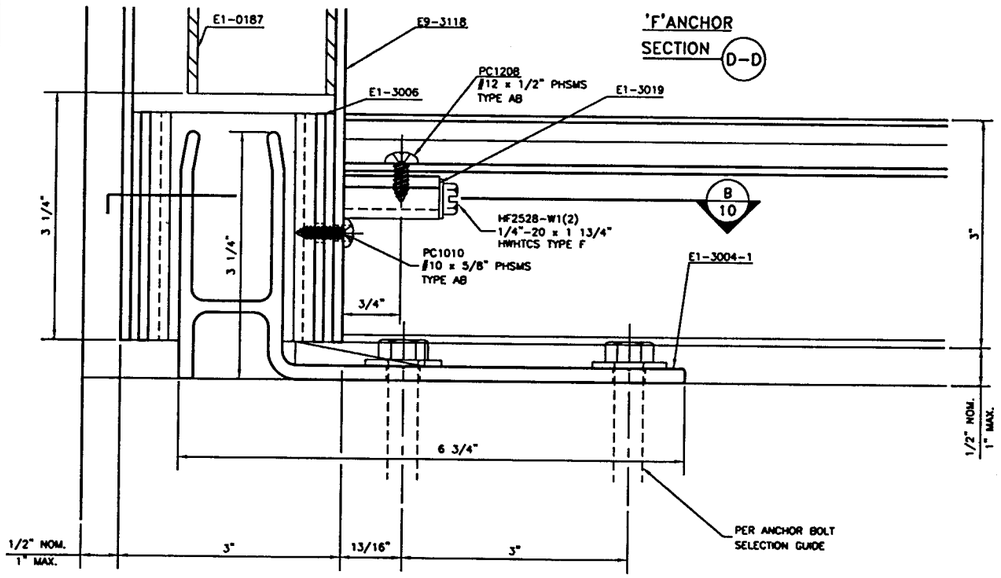

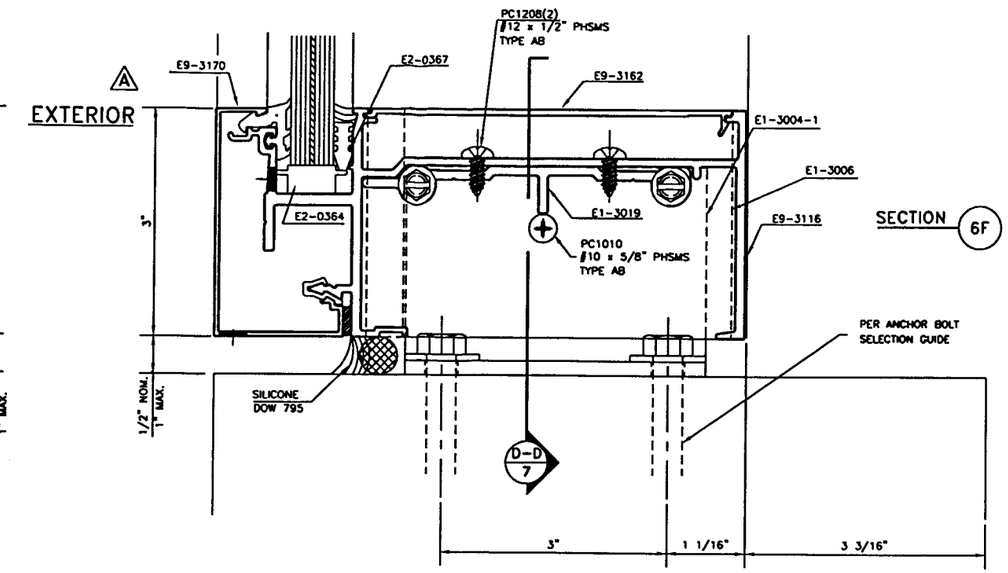

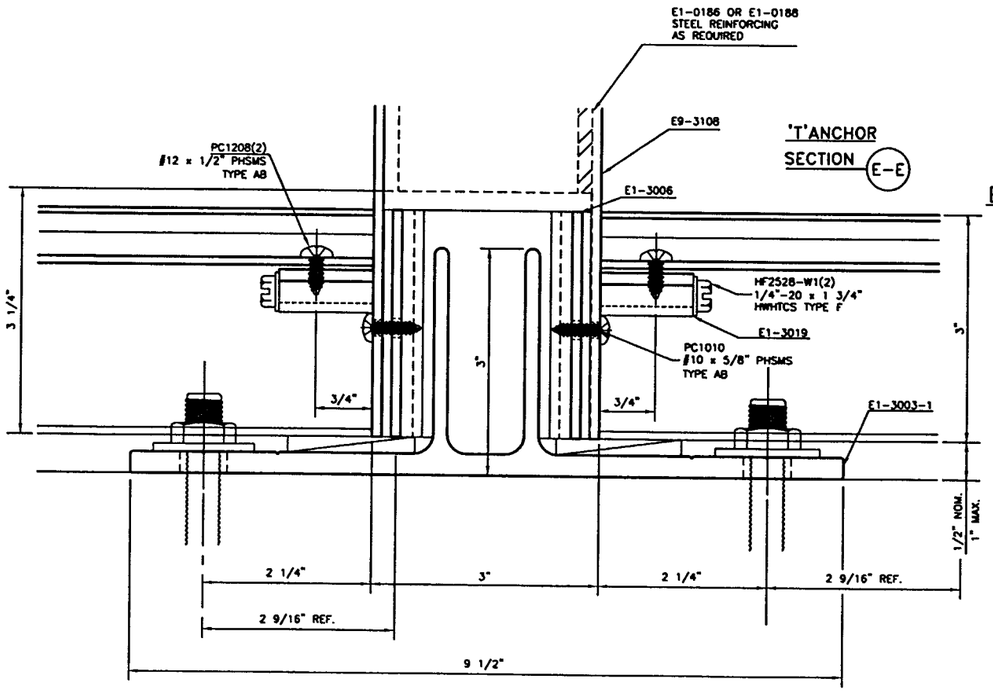

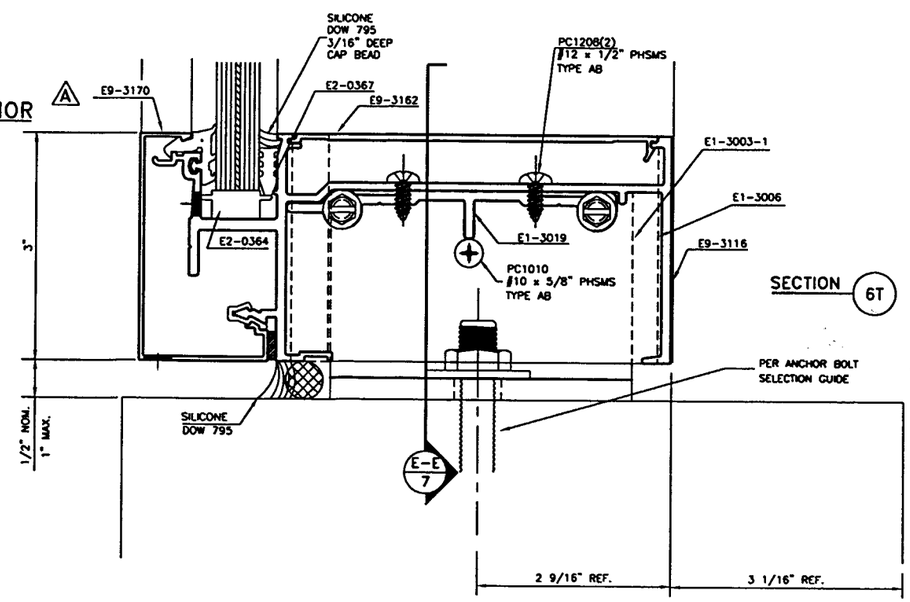

Approved as complying with the Florida Building Code
Date APRIL 25, 2002
NOA# 01-1125.05
Miami Dade Product Control Division
By Shaq I. Chanda

RESERVED FOR METRO-DADE USE ONLY

YKK AP America
YKK AP AMERICA, INC.
5630 GWALTNEY DRIVE
ATLANTA, GEORGIA 30336

SYSTEM	SCALE
YHC300 I.G. (130psf)	1/2

DESCRIPTION: BOTTOM 'F' & 'T' ANCHOR DETAILS

DRAWING NUMBER	REV.
YHC 300 IG-130S	A

APPROVED BY	DRAWN BY	DATE	SHEET NO.
JIA	RTB	8/22/01	7 OF 19

G:\SYSDWGS\YHC300IG\DADE\130PSF\C300I130S07.DWG

REV.	DESCRIPTION	BY	DATE
A	AS PER DADE CO. REVIEW	RTB	1/22/02

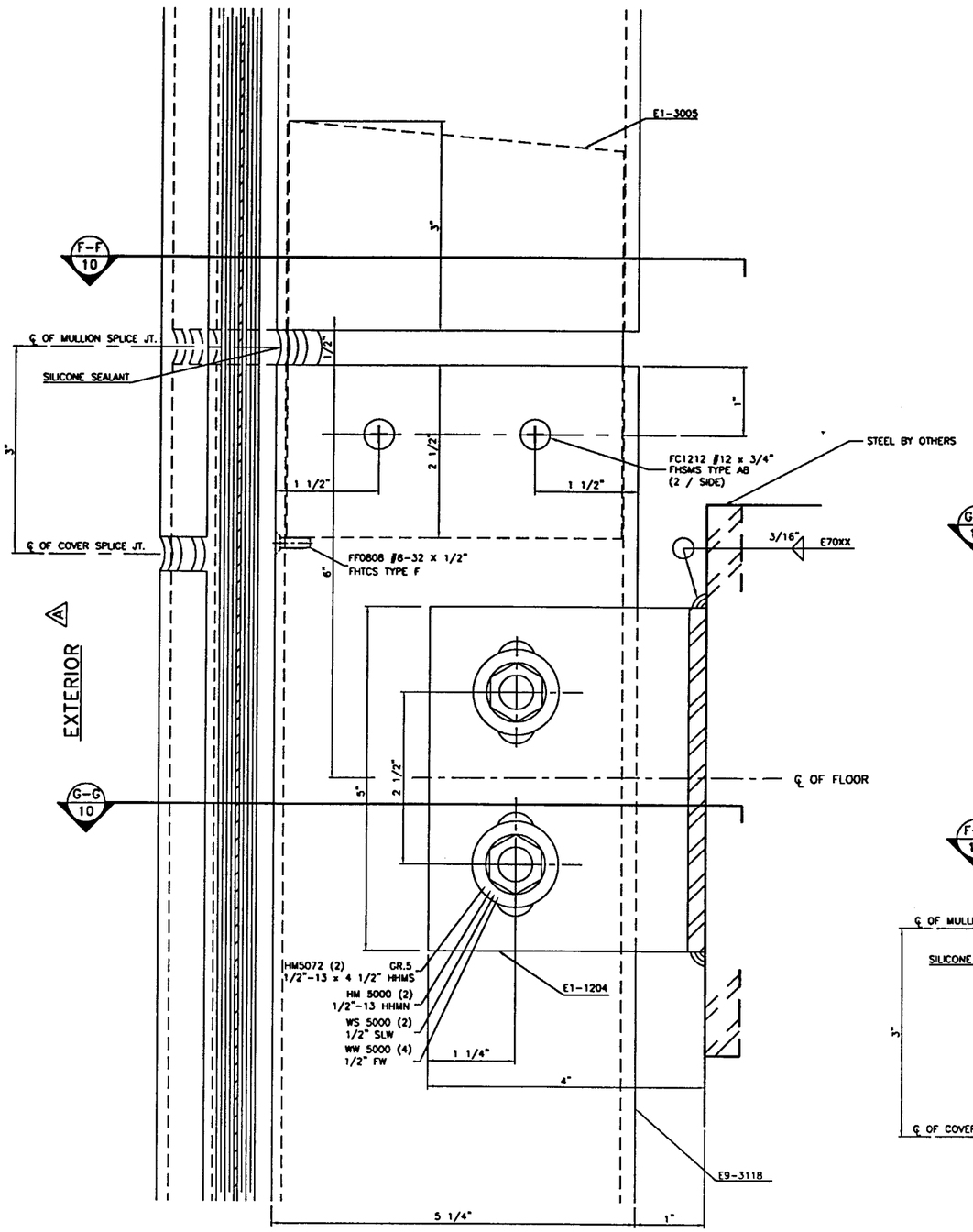

SPLICE & WINDLOAD ANCHOR CLIP

DETAIL 51
JAMB

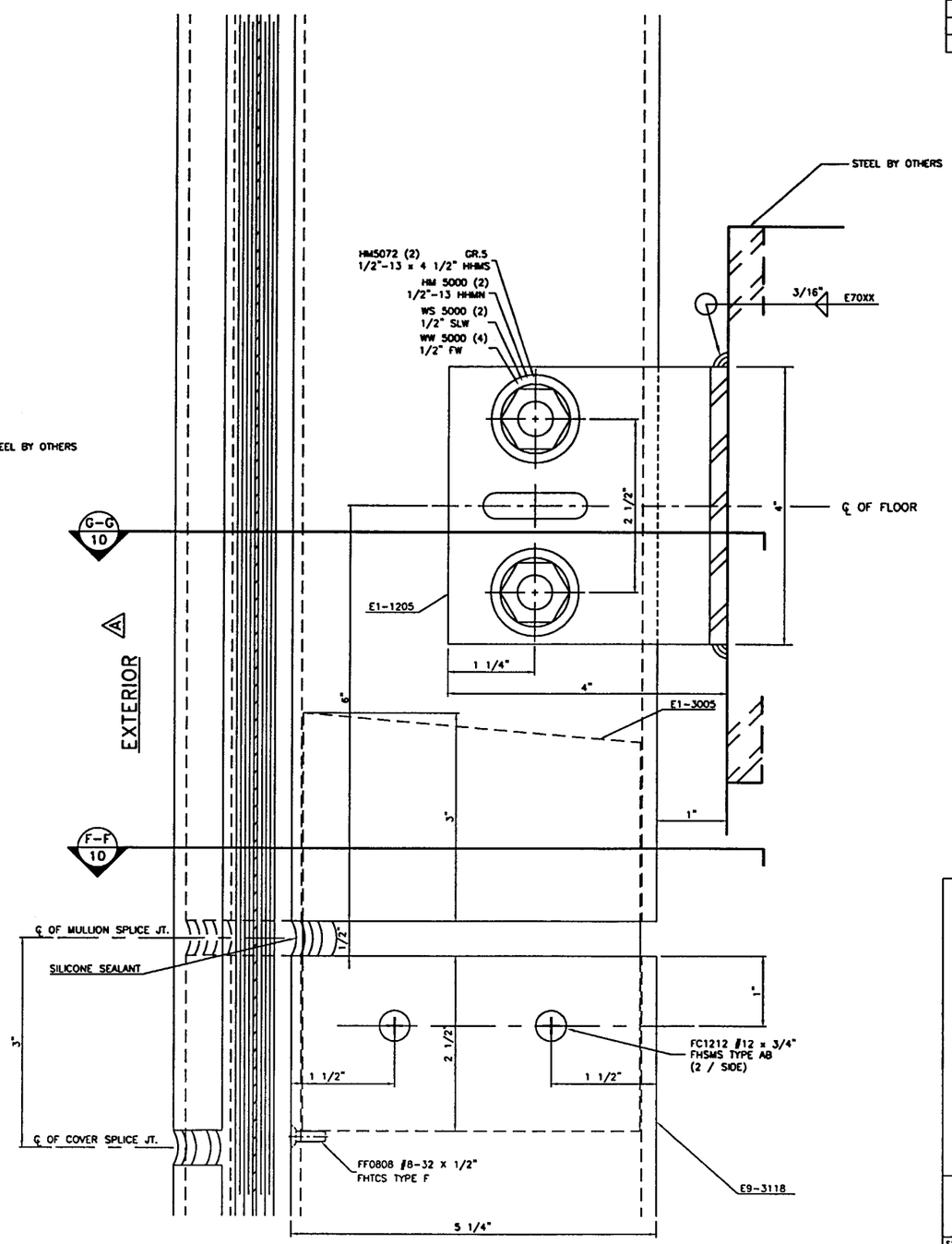

SPLICE & DEADLOAD ANCHOR CLIP

DETAIL 51A
JAMB

Approved as complying with the
Florida Building Code
Date APRIL 25, 2002
NOA# 01-1125.05
Miami Dade Product Control
Division
By Ishwar I. Chander

RESERVED FOR METRO-DADE USE ONLY

YKK AP America

YKK AP AMERICA, INC.
5630 GWALTNEY DRIVE
ATLANTA, GEORGIA 30336

SYSTEM	SCALE
YHC 300 I.G. (130psf)	1/2

DESCRIPTION: SPLICE & ANCHOR CLIP DETAILS

DRAWING NUMBER	REV.
YHC 300 IG-130S	A

APPROVED BY	DRAWN BY	DATE	SHEET NO.
JIA	RTB	8/22/01	8 OF 19

G:\SYSDWGS\YHC300IG\DADE\130PSF\C300I130S08.DWG

REV.	DESCRIPTION	BY	DATE
A	AS PER DADE CO. REVIEW	RTB	1/22/02

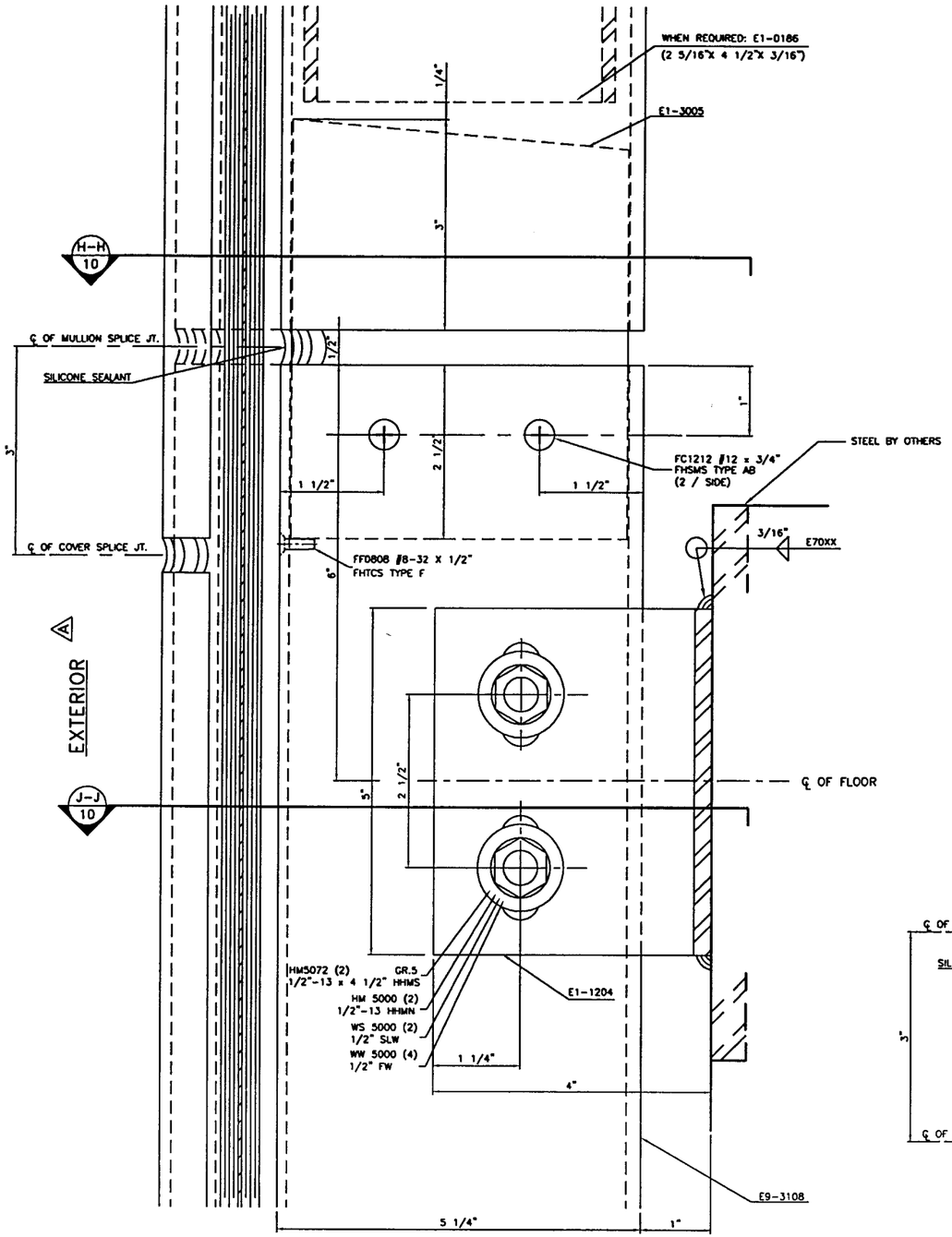

SPLICE & WINDLOAD ANCHOR CLIP

DETAIL 52
MULL.

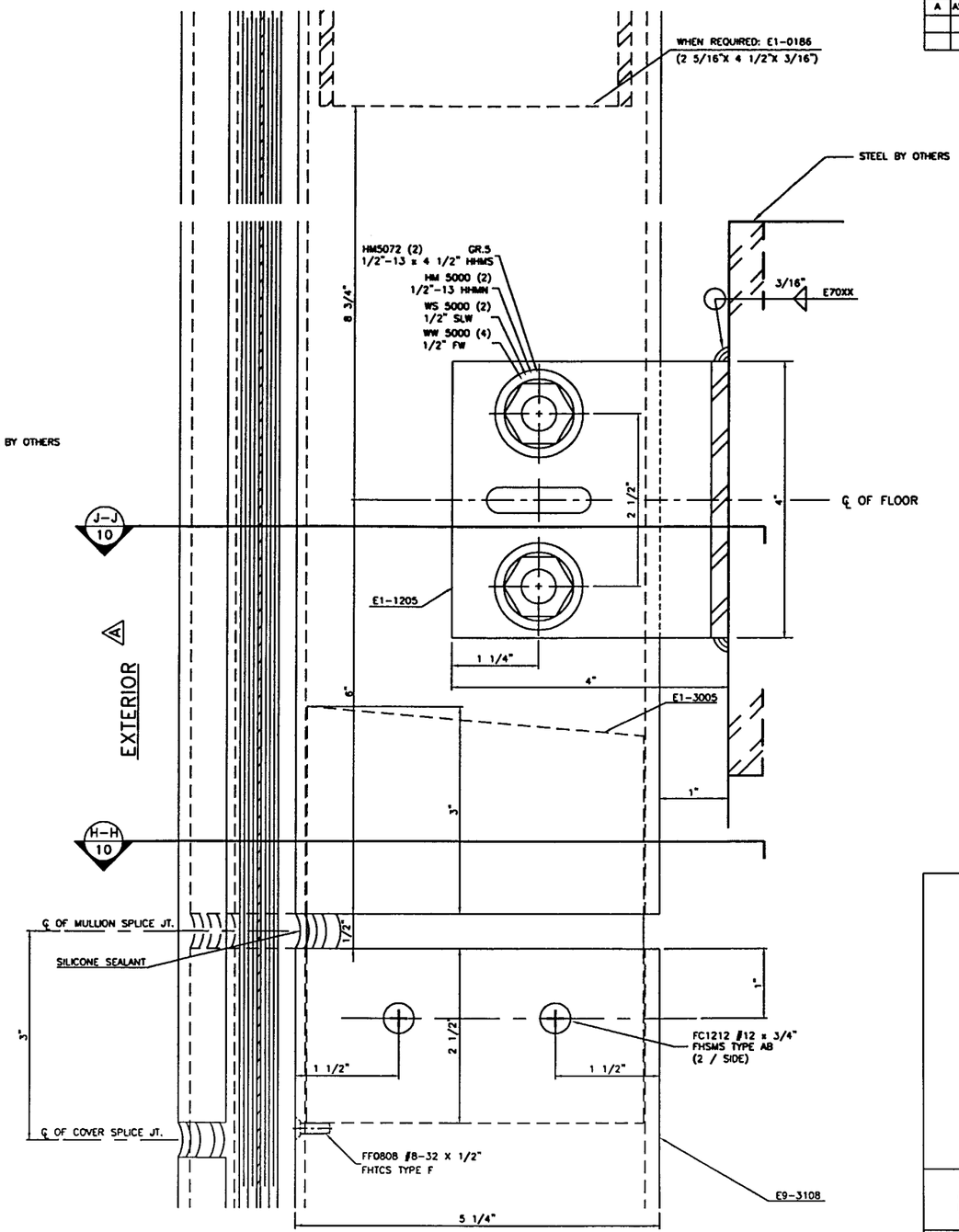

SPLICE & DEADLOAD ANCHOR CLIP

DETAIL 52A
MULL.

Approved as complying with the Florida Building Code
Date APRIL 25, 2002
NOA# 01-1129.05
Miami Dade Product Control Division
By Ishaq I. Chanda

RESERVED FOR METRO-DADE USE ONLY

YKK ap America

YKK AP AMERICA, INC.
5630 GWALTNEY DRIVE
ATLANTA, GEORGIA 30336

SYSTEM	SCALE
YHC 300 I.G. (130psf)	1/2

DESCRIPTION: SPLICE & ANCHOR CLIP DETAILS

DRAWING NUMBER	REV.
YHC 300 IG-130S	A

APPROVED BY	DRAWN BY	DATE	SHEET NO.
JIA	RTB	8/22/01	9 OF 19

G:\SYSDWGS\YHC300IG\DADE\130PSF\C300I130S09.DWG

REV.	DESCRIPTION	BY	DATE
A	AS PER DADE CO. REVIEW	RTB	1/22/02

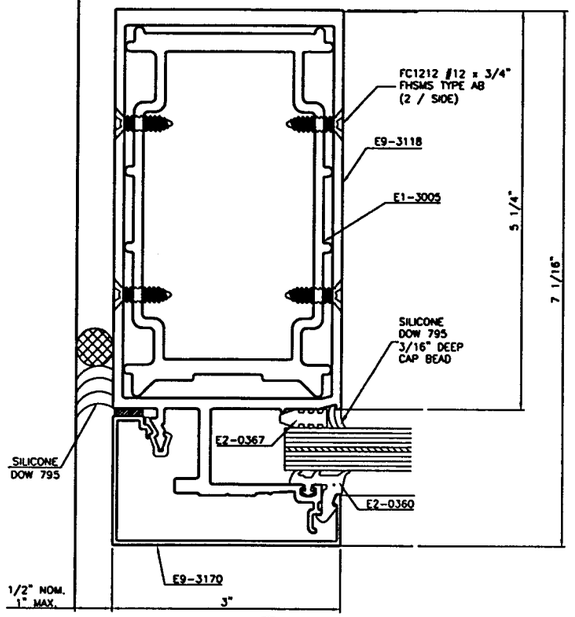

SECTION F-F

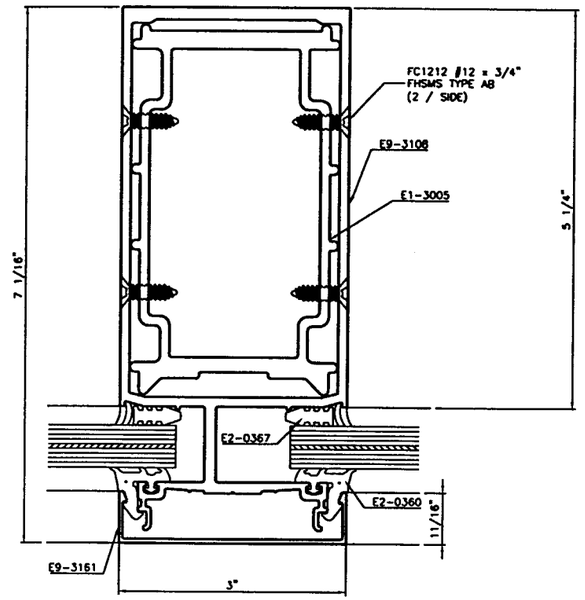

SECTION H-H

EXTERIOR A

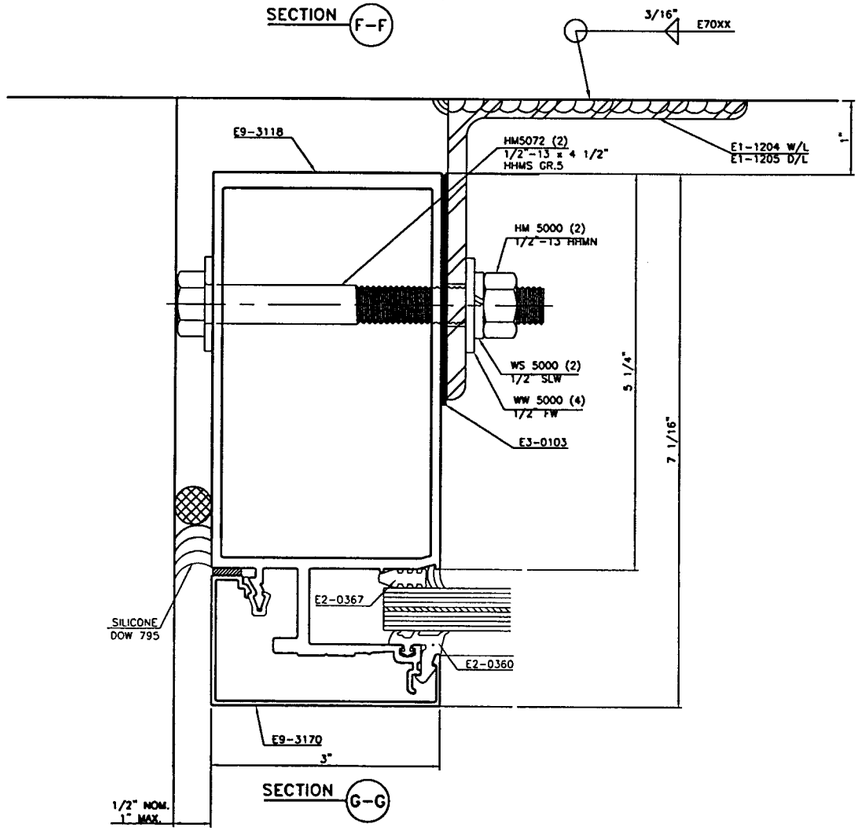

SECTION G-G

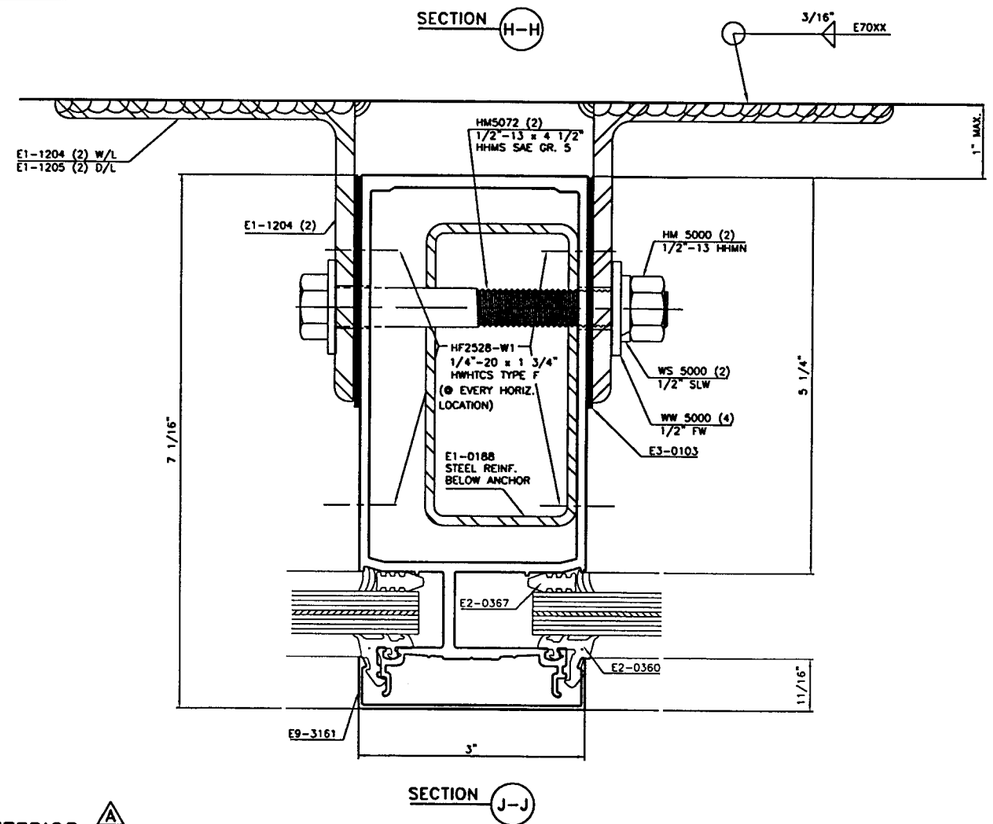

SECTION J-J

EXTERIOR A

Approved as complying with the Florida Building Code
Date APRIL 25, 2002
NOA# 01-1128.05
Miami Dade Product Control Division
By Ishaq I. Chanda

RESERVED FOR METRO-DADE USE ONLY

YKK AP America

YKK AP AMERICA, INC.
5630 GWALTNEY DRIVE
ATLANTA, GEORGIA 30336

SYSTEM	SCALE
YHC 300 I.G. (130psf)	1/2

DESCRIPTION: SPLICE AND ANCHOR CLIP DETAILS

DRAWING NUMBER	REV.
YHC 300 IG-130S	A

APPROVED BY	DRAWN BY	DATE	SHEET NO.
JIA	RTB	8/22/01	10 OF 19

G:\SYSDWGS\YHC300IG\DADE\130PSF\C300I130S10.DWG

REV.	DESCRIPTION	BY	DATE
A	AS PER DADE CO. REVIEW	RTB	1/22/02

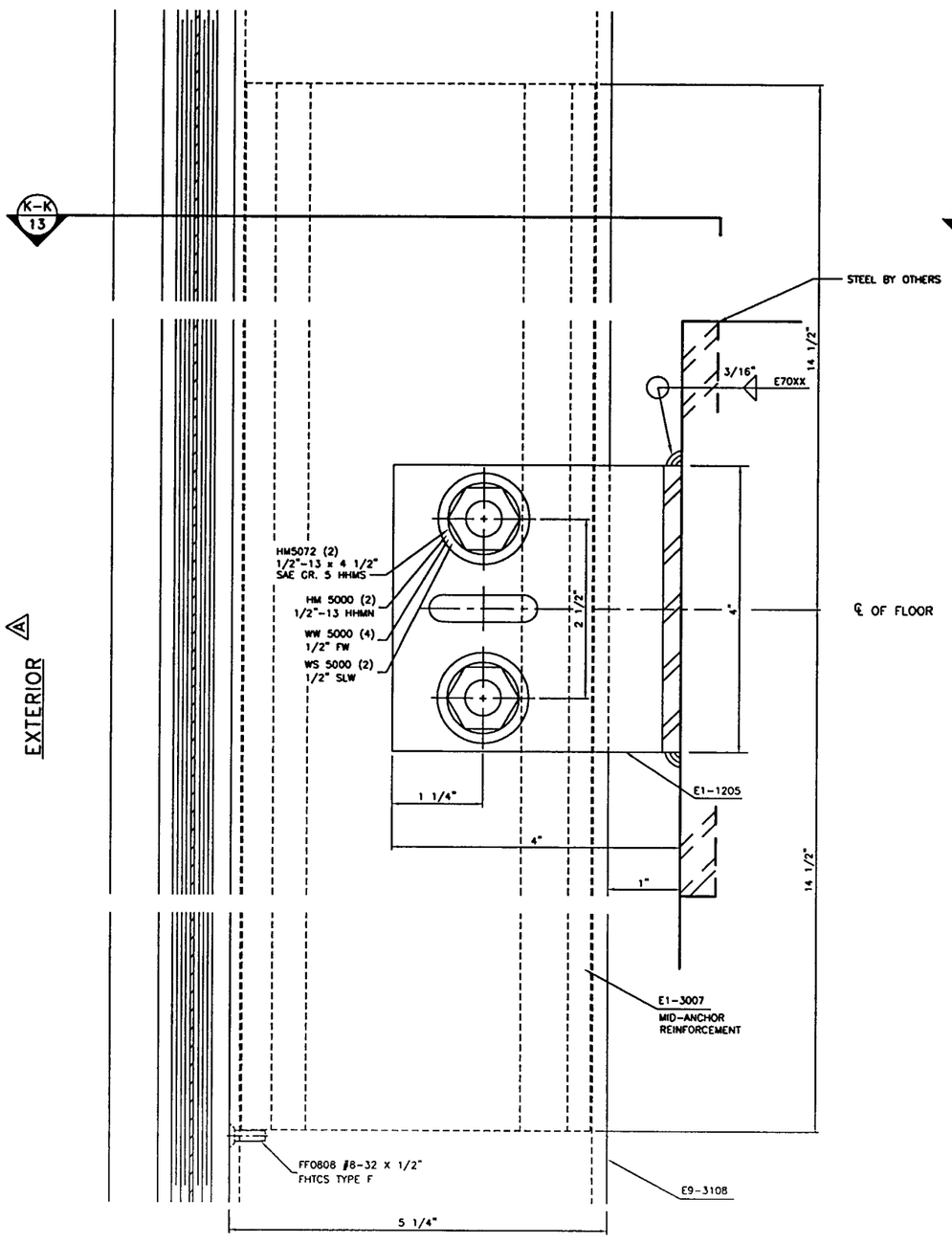

DEADLOAD ANCHOR CLIP

DETAIL 53

● JAMB

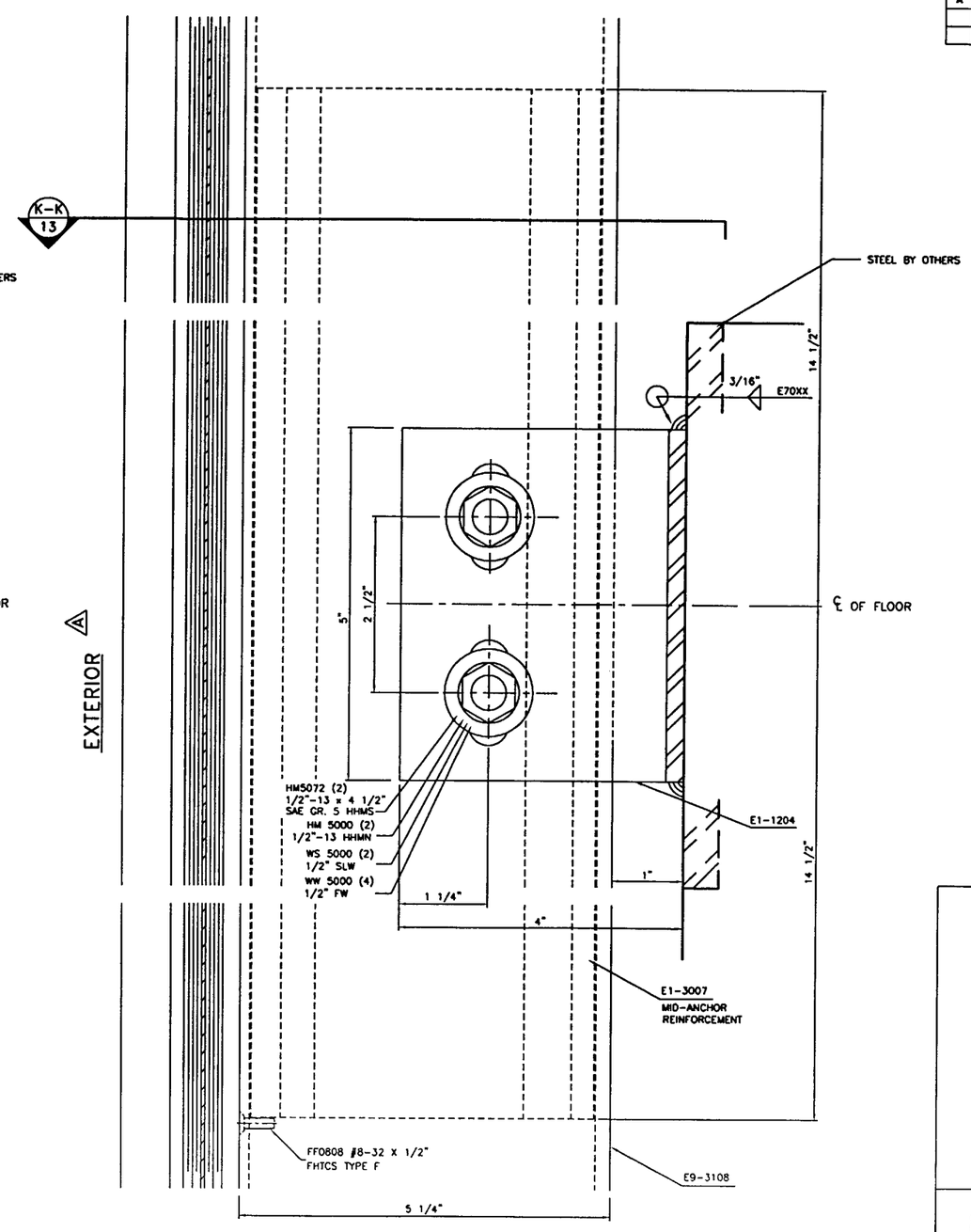

WINDLOAD ANCHOR CLIP

DETAIL 53A

● JAMB

Approved as complying with the Florida Building Code
Date APRIL 25, 2002
NOA# 01-1120.05
Miami Dade Product Control Division
By Shaq I. Chanda

RESERVED FOR METRO-DADE USE ONLY

YKK ap America
YKK AP AMERICA, INC.
5630 CWALTNEY DRIVE
ATLANTA, GEORGIA 30336

SYSTEM	SCALE
YHC 300 I.G. (130psf)	1/2
DESCRIPTION: MID-ANCHOR DETAILS	
DRAWING NUMBER: YHC 300 I.G.-130S	REV. A

APPROVED BY	DRAWN BY	DATE	SHEET NO.
JIA	RTB	8/22/01	11 OF 19

G:\SYSDWGS\YHC300IG\DADE\130PSF\C300I130S11.DWG

REV.	DESCRIPTION	BY	DATE
A	AS PER DADE CO. REVIEW	RTB	1/22/02

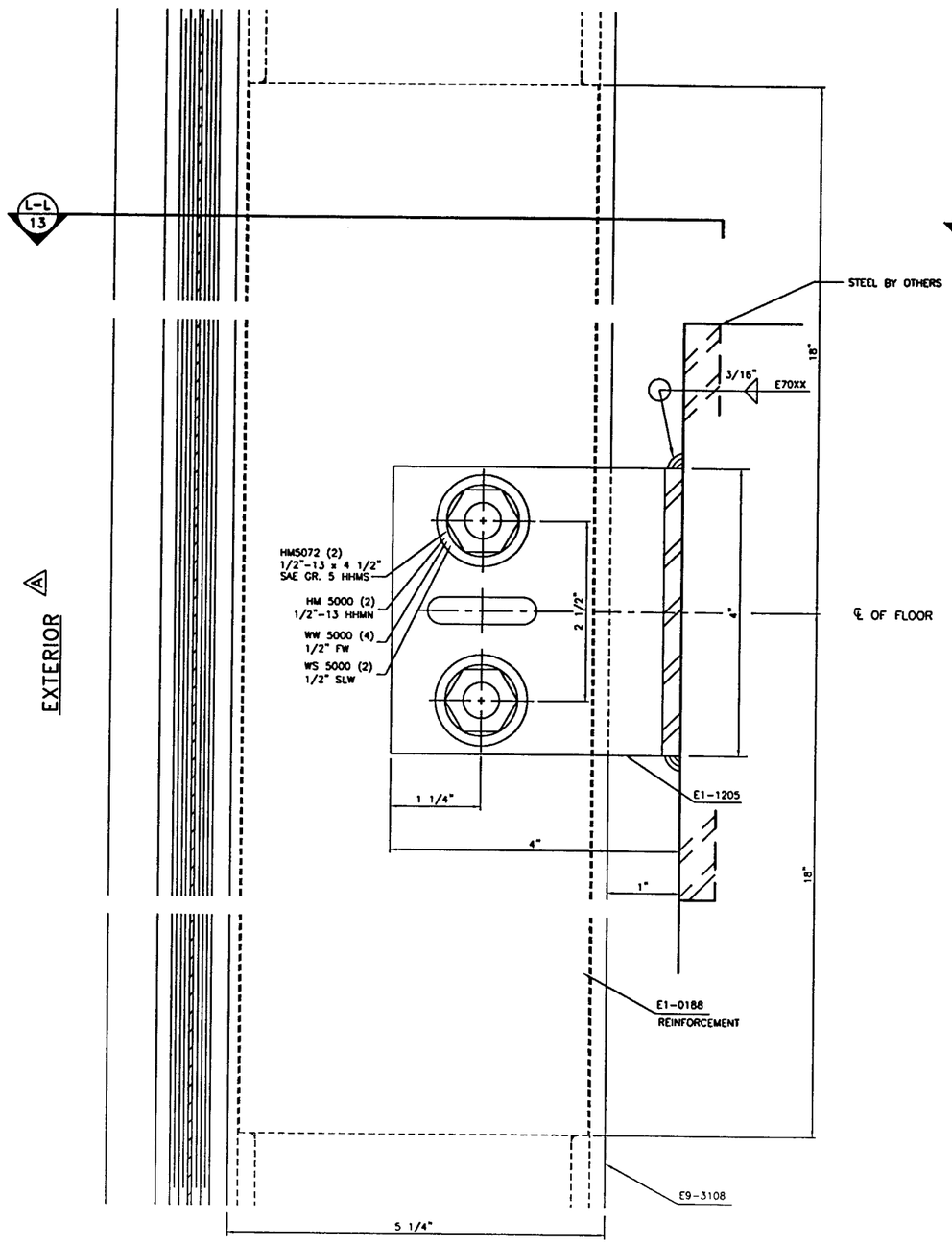

DEADLOAD ANCHOR CLIP

DETAIL 54

● MULL.

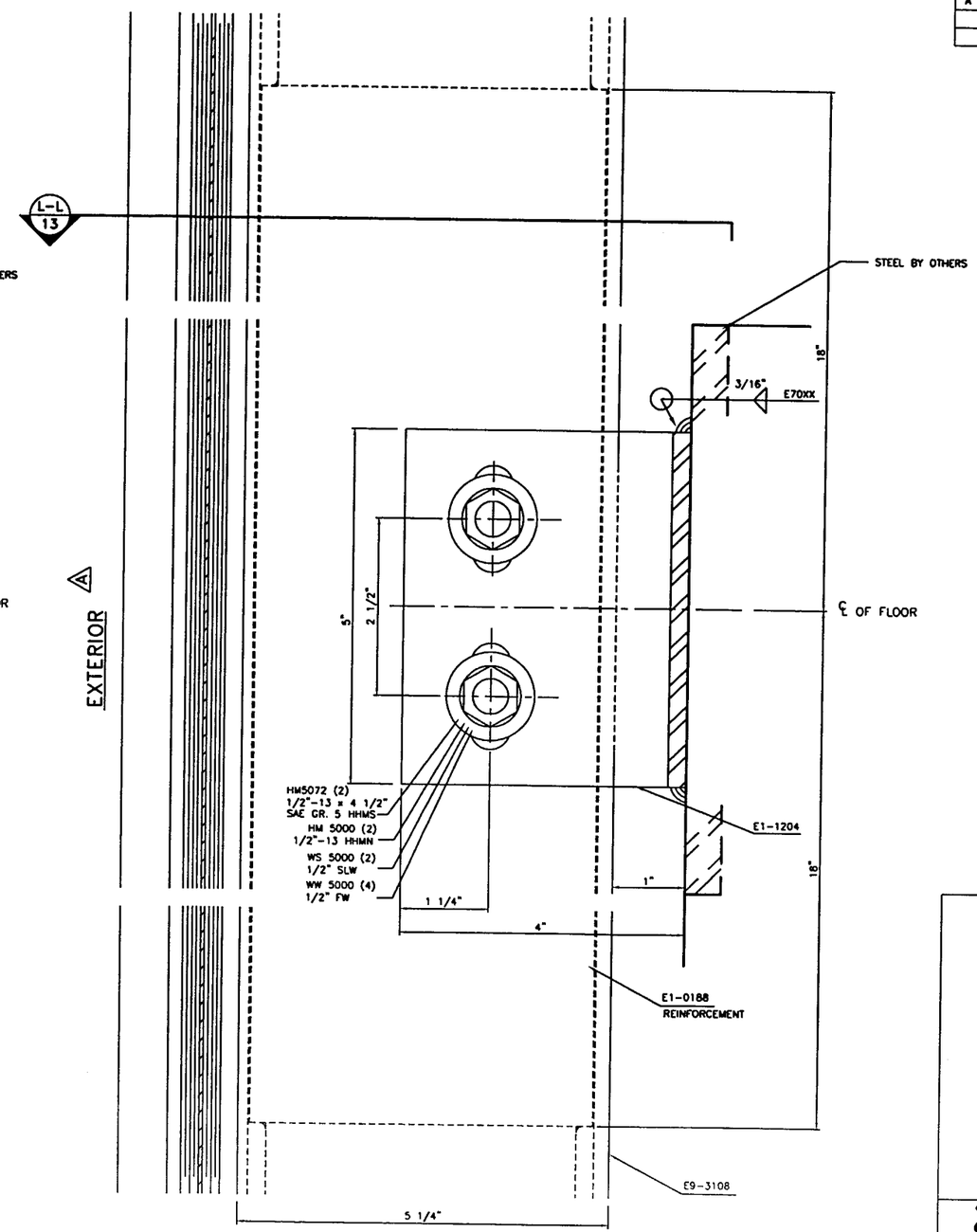

WINDLOAD ANCHOR CLIP

DETAIL 54A

● MULL.

Approved as complying with the Florida Building Code
Date APRIL 25, 2002
NOA# 01-1120.05
Miami Dade Product Control Division
By Ishaq I. Chanda

RESERVED FOR METRO-DADE USE ONLY

YKK AP America

YKK AP AMERICA, INC.
5630 GWALTNEY DRIVE
ATLANTA, GEORGIA 30336

SYSTEM	SCALE
YHC 300 I.G. (130psf)	1/2

DESCRIPTION: MID-ANCHOR DETAILS

DRAWING NUMBER	REV.
YHC 300 I.G.-130S	A

APPROVED BY	DRAWN BY	DATE	SHEET NO.
JIA	RTB	8/22/01	12 OF 19

G:\SYSDWGS\YHC300IG\DADE\130PSF\C300I130S12.DWG

REV.	DESCRIPTION	BY	DATE
A	AS PER DADE CO. REVIEW	RTB	1/22/02

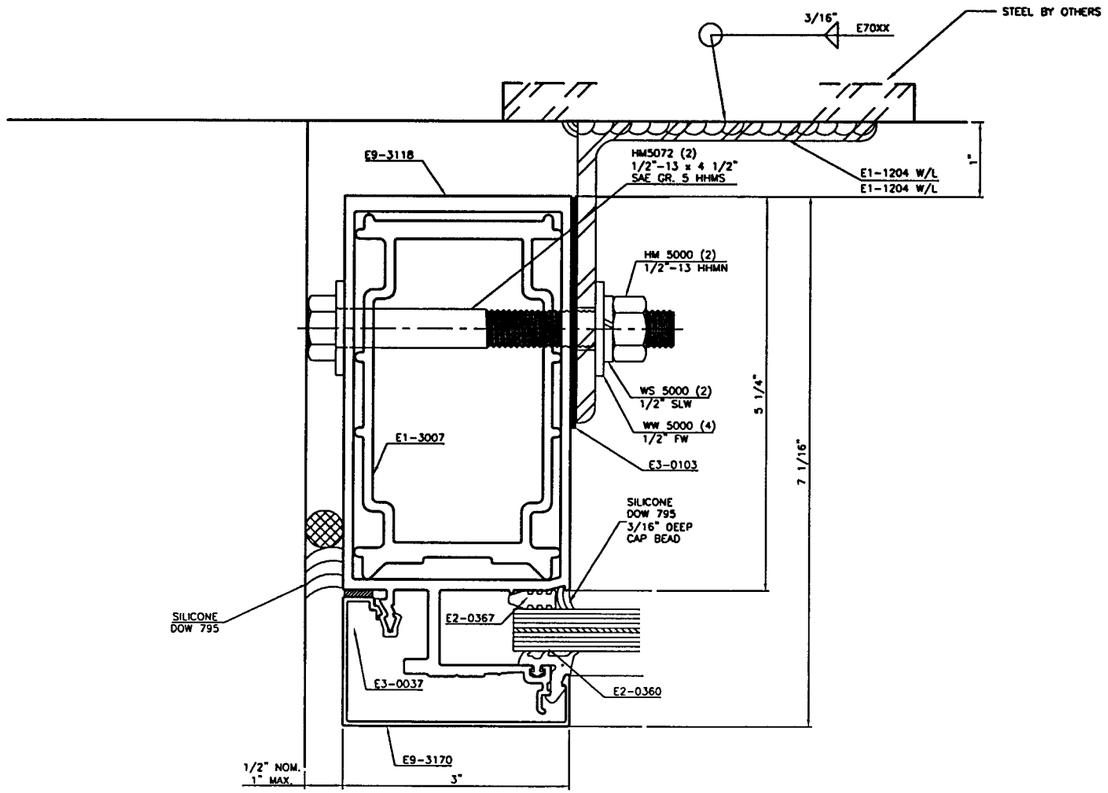

SECTION K-K

EXTERIOR A

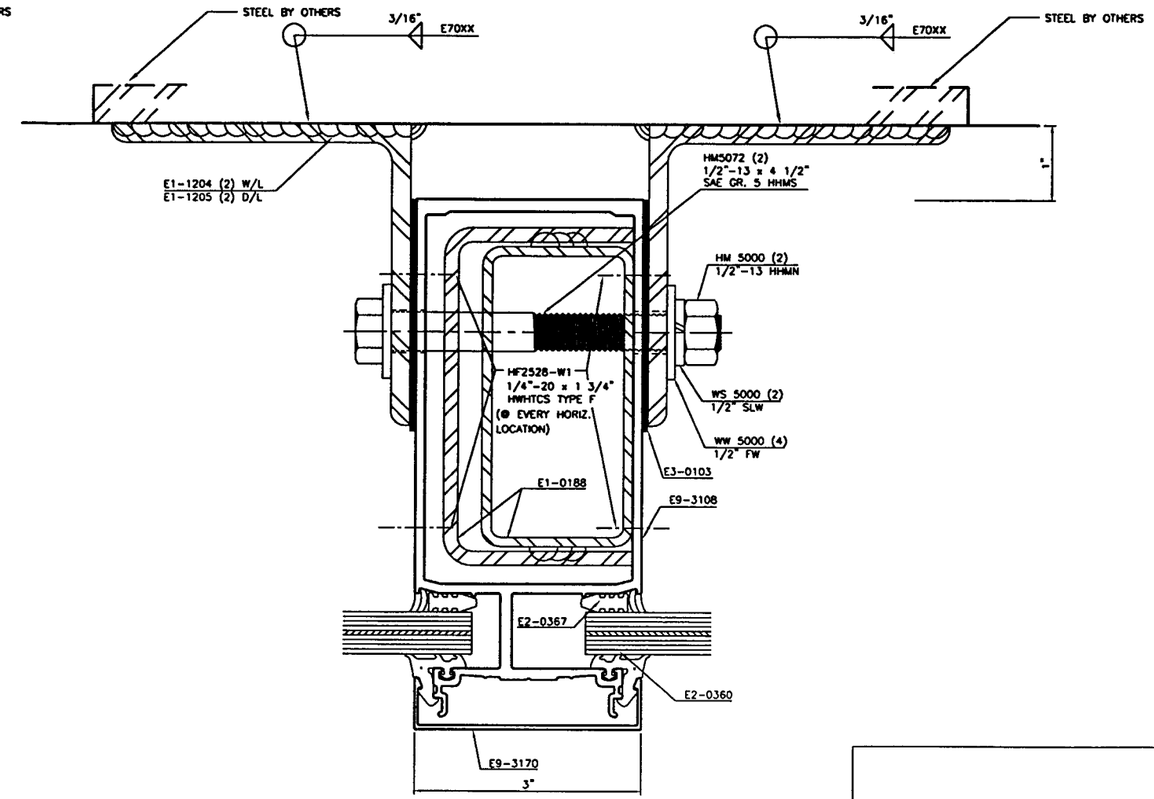

SECTION L-L

Approved as complying with the Florida Building Code
Date APRIL 25, 2002
NOA# 01-1120.05
Miami Dade Product Control Division
By Ishaq I. Chanda

RESERVED FOR METRO-DADE USE ONLY

YKK AP America

YKK AP AMERICA, INC.
5630 GWALTNEY DRIVE
ATLANTA, GEORGIA 30336

SYSTEM	SCALE
YHC 300 I.G. (130psf)	1/2

DESCRIPTION: MID-ANCHOR CLIP DETAILS

DRAWING NUMBER	REV.
YHC 300 I.G.-130S	A

APPROVED BY	DRAWN BY	DATE	SHEET NO.
JIA	RTB	8/22/01	13 OF 19

G:\SYSDWGS\YHC300IG\DADE\130PSF\C300I130S13.DWG

MATERIAL LIST

	DESCRIPTION	SHAPE #	MATERIAL	BASIC DIMENSIONS	REMARK	REV
	VERT. JAMB	E9-3118	6063-T5	3" x 5 1/4"		
	HORIZONTAL	E9-3114	6063-T5	3" x 5 1/4"		
	VERT. MULLION	E9-3108	6063-T5	3" x 5 1/4"		
	SNAP COVER	E9-3161	6063-T5	3" x 11/16"	FOR VERT. & HORIZ. MULL.	
	2 PIECE FLUSH FILLER	E9-3162	6063-T5	4 7/8" x 5/16"	FOR SILL	
	PERIM. SNAP COVER	E9-3170	6063-T5	3" x 1 11/16"	FOR JAMB, HEAD, AND SILL	
	HEAD	E9-3115	6063-T5	3" x 5 1/4"		
	SILL	E9-3116	6063-T5	3" x 5 1/4"		
	INTER. SNAP COVER	E9-3168	6063-T5	3" x 2 1/16"	FOR HORIZONTAL	
	GLASS STOP	E9-3137	6063-T5	1" x 1 7/8"		
	ANGLE	E9-9303	6063-T5	1 1/2" x 1 1/2"	FOR 90° CORNER	
	ANGLE	E9-9302	6063-T5	1" x 1"	FOR 90° CORNER	

PART LIST

	DESCRIPTION	PART #	MATERIAL	BASIC DIMENSIONS	REMARK	
	"T" ANCHOR	E1-3003	6061-T6	4"	TOP/BOTTOM ANCHOR (FROM E9-3194)	A
	"F" ANCHOR	E1-3004	6063-T5	4"	TOP/BOTTOM JAMB ANCHOR (FROM E9-3598)	A
	SPLICE SLEEVE	E1-3005	6063-T5	6"	FOR MULTI-SPAN APPLICATION	
	ANCHOR SLEEVE	E1-3006	6063-T5	3"	USE WITH 'T' & 'F' ANCHORS	
	REINF. SLEEVE	E1-3007	6063-T5	29" LONG	AT MID ANCHOR IN TWIN SPAN IN JAMB	
	SHEAR CLIP	E1-3019	6063-T5	4 3/8"	HORIZ. TO VERT. CONNECTION	
				(E1-0187) + (E1-0175)		
	STEEL REINFORCEMENT	E1-0188	STEEL A36	2 x 4 TUBE + CHANNEL	FOR INTERM. VERT. @ TWIN SPAN	A
	STEEL REINFORCEMENT	E1-0187	STEEL A36	2" x 4" x 1/8"	FOR JAMB @ SINGLE SPAN	
	STEEL REINFORCEMENT	E1-0186	STEEL A36	2 5/16" x 4 1/2" x 3/16"	FOR INTERMEDIATE VERT. USE (2)	
	CHANNEL	E1-0175	STEEL A36	2 1/2"x 4 1/2"x 3/16"	36" LG., MID-ANCHOR REINF. @ TWIN SPAN	A
			DEPTH	6 15/16" & 7 1/2"	SYSTEM **YHC 300 IG (130psf)**	
					DESCRIPTION **HURRICANE CURTAINWALL**	
					FINISH PAINTED OR ANODIZED	
					HARDWARE N/A	
					GLAZING SEE ELEVATION SHEET	

BILL OF MATERIALS

FOR SINGLE GLAZING

PART LIST

	DESCRIPTION	PART #	MATERIAL	BASIC DIMENSIONS	COLOR	REMARK	REV
	EXT. GASKET 3/16" F.C.	E2-0351	EPDM		BLACK	EXTERIOR FOR 9/16" GLASS	
	EXT. GASKET 5/16" F.C.	E2-0352	EPDM		BLACK	EXTERIOR FOR 7/16" GLASS	
	SPACER GASKET	E2-0367	EPDM SC		BLACK	INTERIOR	
	END DAM BLOCK	E2-0369	E.V.A. SPONGE		GREY	AT HORIZ. END (SHALLOW)	
	END DAM BLOCK	E2-0368	E.V.A. SPONGE		GREY	AT HORIZ. END (DEEP)	
	SETTING BLOCK	E2-0364	EPDM		BLACK		
	SLIP PAD	E3-0103	NYLON		WHITE	FOR STEEL ANCHORS	
	PVC ISOLATOR	E3-0037	RIGID PVC		BLACK		
	FH SMS (F)	FF-0808	ST. ZINC PLATED	#8 x 1/2"		TO LOCATE E1-3007	
	FH SMS (AB)	FC-1212	ST. ZINC PLATED	#12 x 3/4"		FOR SPLICE SLEEVE	
	FH SMS (AB)	FC-1220	ST. ZINC PLATED	#12 x 1 1/4"		FOR HORIZONTAL/SHEAR CLIP	
	PH SMS (AB)	PC-1010	ST. ZINC PLATED	#10 x 5/8"		FOR ANCHOR SLEEVE	
	PH SMS (AB)	PC-1208	ST. ZINC PLATED	#12 x 1/28"		FOR SHEAR BLOCK	
	HWH TCS (F)	HF2528-W1	ST. ZINC PLATED	1/4" - 20 x 1 3/4"		FOR TYP. SHEAR CLIP & STEEL REINF.	
	NUT 1/2"	HM-5000	ST. ZINC PLATED	1/2" x 13		FOR INTERMEDIATE ANCHORS	
	WASHER 1/2"	WN-5000	ST. ZINC PLATED	1/2"		FOR INTERMEDIATE ANCHORS	
	LOCK-WASHER 1/2"	WS-5000	ST. ZINC PLATED	1/2"		FOR INTERMEDIATE ANCHORS	
	BOLT	HM-5072	STEEL GR. 5	1/2" x 13 x 4 1/2"		FOR INTERMEDIATE ANCHORS	
	STEEL ANGLE	E1-1204	STEEL A36	4" x 4" x 1/4" x 5" LG.		WINDLOAD ANCHOR	
	STEEL ANGLE	E1-1205	STEEL A36	4" x 4" x 1/4" x 4" LG.		DEADLOAD ANCHOR	
	RAWL-STUD ANCHOR			5/8"		CONC. ANCHOR (SEE SHTS 16,18)	A
	RAWL-BOLT ANCHOR			1/2"		CONC. ANCHOR (SEE SHTS 16,18)	A
	BOLT (STEEL)		SAE (GR. 5)	3/8", 1/2"		INTO STEEL (SEE SHTS 17, 19)	A
	DOW 795		SILICONE			FOR PERIMETER CAULKING	
	DOW 995		SILICONE			FOR STRUCTURAL CAULKING	

NOTE :

Approved as complying with the Florida Building Code
Date APRIL 25, 2002
NOA# 01-1120.05
Miami Dade Product Control Division
By Shang I. Chang

LP LOOSE PART
S SELECTION PART
OP OPTION PART Y: COLOR INDICATED

REV	DESCRIPTION	BY	DATE
A	PER DADE CO. REVIEW	RTB	1/22/02

NO. YHC 300 IG-130S A

CKD BY	BY	DATE	SHEET NO.
JIA	RTB	8/22/01	14 OF 19

G:\SYSDWGS\YHC300IG\DADE\130PSF\C300I130S14.XLS

REV.	DESCRIPTION	BY	DATE
A	NO CHANGE	RTB	1/22/02

YHC-300 IG 130psf HURRICANE CURTAIN WALL

ANCHOR BOLT SELECTION GUIDE

1. INTRODUCTION: THE ENCLOSED CHARTS ARE INTENDED TO BE USED AS A GUIDE FOR THE PROJECTS INSIDE METRO-DADE BCCO JURISDICTION. THERE ARE MANY POSSIBILITIES AND CONDITIONS THAT AFFECT THE STRUCTURAL BEHAVIOR OF EACH CURTAIN WALL APPLICATION; IN ORDER TO PROVIDE THE ENCLOSED RECOMMENDATIONS, SOME ASSUMPTIONS HAD TO BE MADE IN REFERENCE TO THE STRENGTH OF THE SURROUNDING MATERIALS; LIKE FOR EXAMPLE, CONCRETE IS ASSUMED TO BE OF 3000 PSI STRENGTH.
WE ARE PRESENTING TWO COMMON ANCHOR APPLICATIONS SUCH AS THE ANCHORING TO CONCRETE AND TO STEEL; BUT AGAIN, MANY OTHER POSSIBILITIES MAY BE ENCOUNTERED IN THE JOB SITES. THEREFORE, YKK RECOMMENDS TO HAVE EACH PROJECT REVIEWED BY OUR TECHNICAL CENTER OR A PROFESSIONAL ENGINEER REGISTERED IN THE STATE OF FLORIDA.

2. CONSIDERATIONS: IN ORDER TO USE THIS GUIDE, SOME CONSIDERATIONS HAVE TO BE KNOWN PRIOR TO START.
2.1 WINDLOAD: THE WINDLOAD FOR THE PROJECT AS DETERMINED BY LOCAL BUILDING CODE REQUIREMENTS.
2.2 CONFIGURATION OF THE WALL AS SHOWN BY PROJECT PLANS AND ELEVATIONS; THE IMPORTANT FACTORS TO ESTABLISH ARE:
+ TWIN OR SINGLE SPANS
+ CLEAR SPAN DIMENSION.
+ SPACING BETWEEN MULLIONS.
2.3 TYPE OF ANCHORS TO BE USED ON EACH DIFFERENT CONDITION ON THE JOB. PLEASE REFER TO DETAIL DRAWINGS FOR INFORMATION ON THE ANCHORS TYPE "F" AND "T".

3. HOW TO USE THIS GUIDE:
3.1 FOR EACH CASE, CHOOSE THE ANCHOR TYPE TO BE USED AND LOOK FOR THE APPROPRIATE SHEET, WHETHER IT IS ANCHORING TO CONCRETE OR TO STEEL.
3.2 FIND THE CHART ON THE SINGLE SPAN LINE OR TWIN SPAN LINE WITH THE HEADING FOR THE DESIGN WINDLOAD OF THE PROJECT.
3.3. DETERMINE THE RECOMMENDED ANCHOR BY FINDING THE CROSSING POINT BETWEEN YOUR PARTICULAR CLEAR SPAN LENGTH AND YOUR PARTICULAR MULLION SPACING. MARK THE POINT. EACH AREA OF THE CHART (AS MARKED BY DIFFERENT HATCHING) HAS A CORRESPONDING RECOMMENDATION FOR BOLTS TO BE USED.

INDEX:

INTRODUCTION ____ SHEET 15
CONSIDERATIONS ____ SHEET 15
HOW TO USE THIS GUIDE ____ SHEET 15
CHARTS GUIDE FOR "F" ANCHOR IN CONCRETE ____ SHEET 16
CHARTS GUIDE FOR "F" ANCHOR IN STEEL ____ SHEET 17
CHARTS GUIDE FOR "T" ANCHOR IN CONCRETE ____ SHEET 18
CHARTS GUIDE FOR "T" ANCHOR IN STEEL ____ SHEET 19

Approved as complying with the Florida Buiding Code
Date APRIL 25, 2002
NOA# 01-1128.05
Miami Dade Product Control Division
By Ishaq I. Chanda

RESERVED FOR METRO-DADE USE ONLY

YKK AP America
YKK AP AMERICA, INC.
5630 GWALTNEY DRIVE
ATLANTA, GEORGIA 30336

SYSTEM	SCALE
YHC 300 I.G. (130psf)	NONE
DESCRIPTION: ANCHOR BOLT SELECTION GUIDE	
DRAWING NUMBER: YHC 300 I.G.-130S	REV. A

APPROVED BY	DRAWN BY	DATE	SHEET NO.
JIA	RTB	8/22/01	15 OF 19

G:\SYSDWGS\YHC300IG\DADE\130PSF\C300I130S15.DWG

REV.	DESCRIPTION	BY	DATE
A	NO CHANGE	RTB	1/22/02

YHC 300 IG SINGLE SPAN

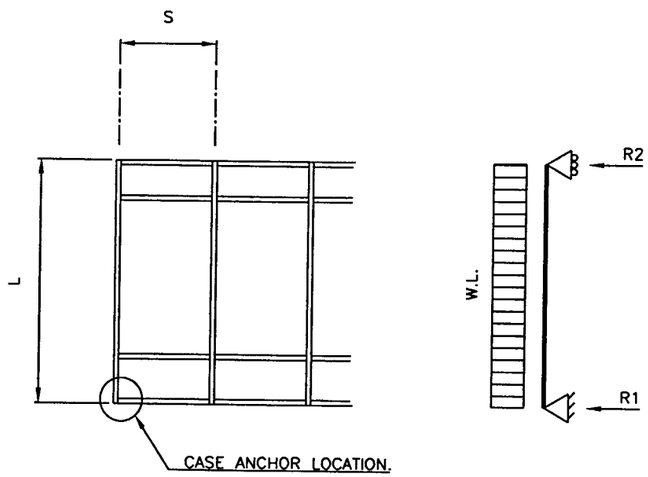

END REACTION $R1=R2=\frac{WL}{2}$

SINGLE SPAN

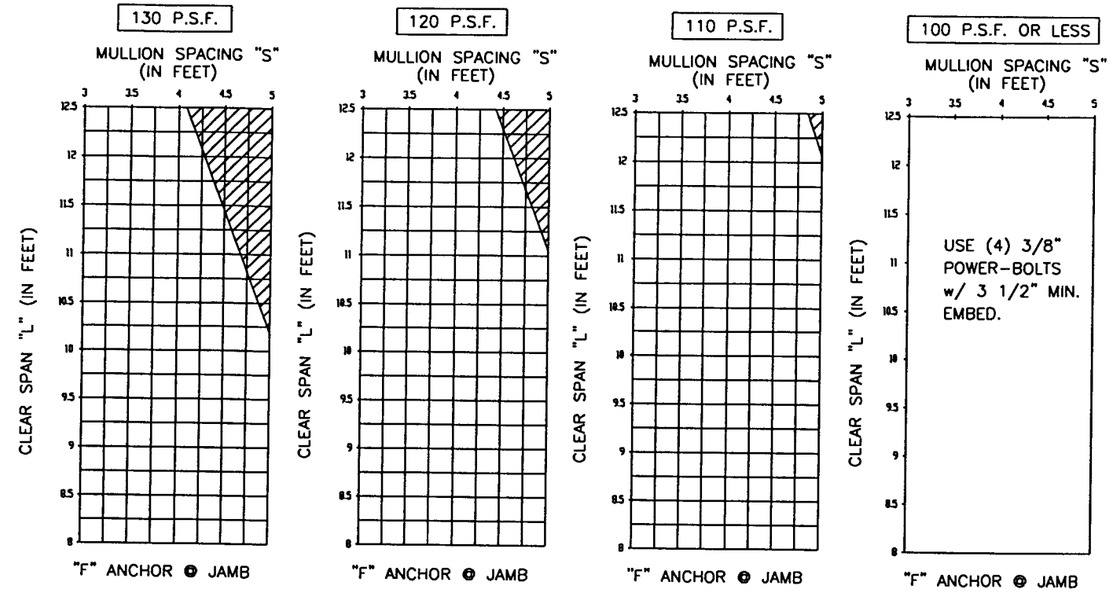

☐ USE (4) 3/8" POWER-BOLTS W/ 3 1/2" EMBED.

▨ USE (4) 1/2" HILTI "HVA HAS Super" ROD W/ 4 1/4" EMBED.

YHC 300 IG TWIN SPAN

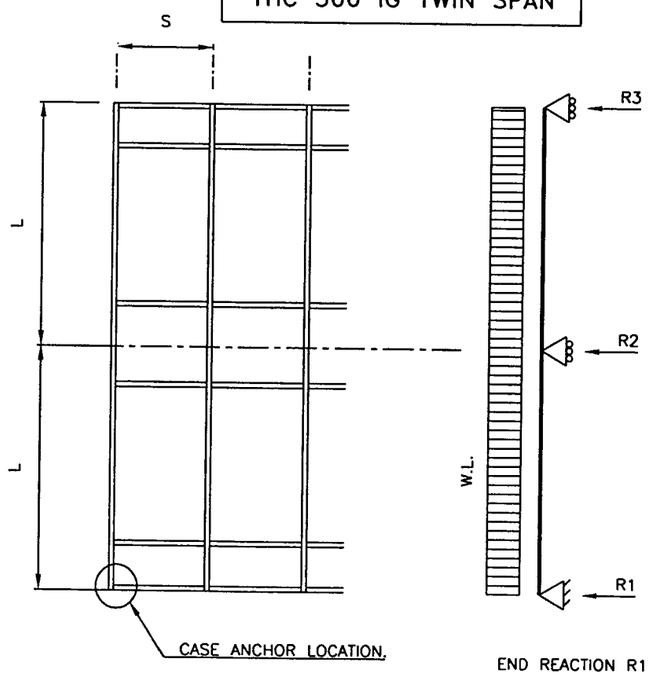

END REACTION $R1=\frac{3}{8}WL$

TWIN SPAN

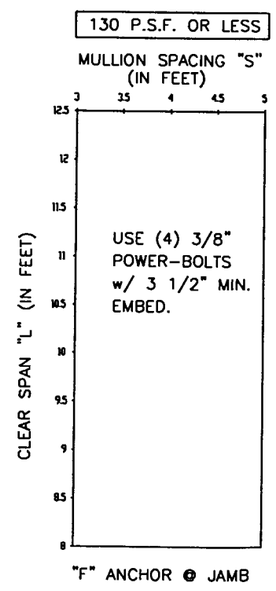

NOTES:
ANCHORING INTO CONCRETE ASSUMING THE FOLLOWING:
1. CONCRETE TO BE 3000 PSI MIN.
2. EDGE DISTANCE AS SHOWN MIN.
3. SIZES AND EMBEDMENT AS PER CHARTS.

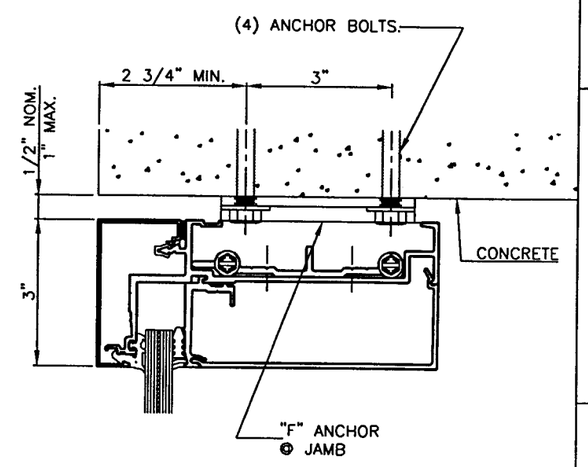

CONCRETE

ANCHOR BOLT SELECTION GUIDE FOR "F" ANCHOR

Approved as complying with the Florida Buiding Code
Date APRIL 25, 2002
NOA# 01-1120.05
Miami Dade Product Control Division
By Ishaq I. Chande

RESERVED FOR METRO-DADE USE ONLY

YKK AP America
YKK AP AMERICA, INC.
5630 GWALTNEY DRIVE
ATLANTA, GEORGIA 30336

SYSTEM	SCALE
YHC 300 I.G. (130psf)	NONE

DESCRIPTION
ANCHOR BOLT SELECTION GUIDE

DRAWING NUMBER	REV.
YHC 300 I.G.-130S	A

APPROVED BY	DRAWN BY	DATE	SHEET NO.
JIA	RTB	8/22/01	16 OF 19

G:\SYSDWGS\YHC300IG\DADE\130PSF\C300I130S16.DWG

REV.	DESCRIPTION	BY	DATE
A	NO CHANGE	RTB	1/22/02

YHC 300 IG SINGLE SPAN

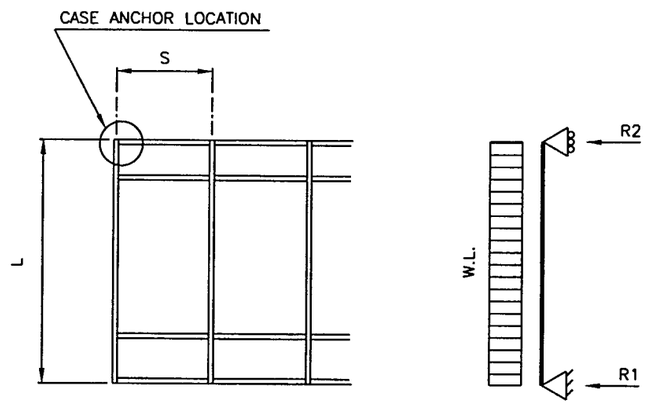

END REACTION $R1 = R2 = \frac{WL}{2}$

SINGLE SPAN

130 P.S.F. OR LESS

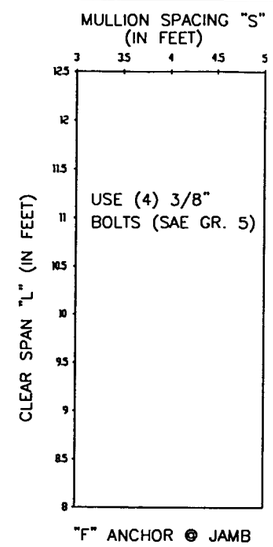

YHC 300 IG TWIN SPAN

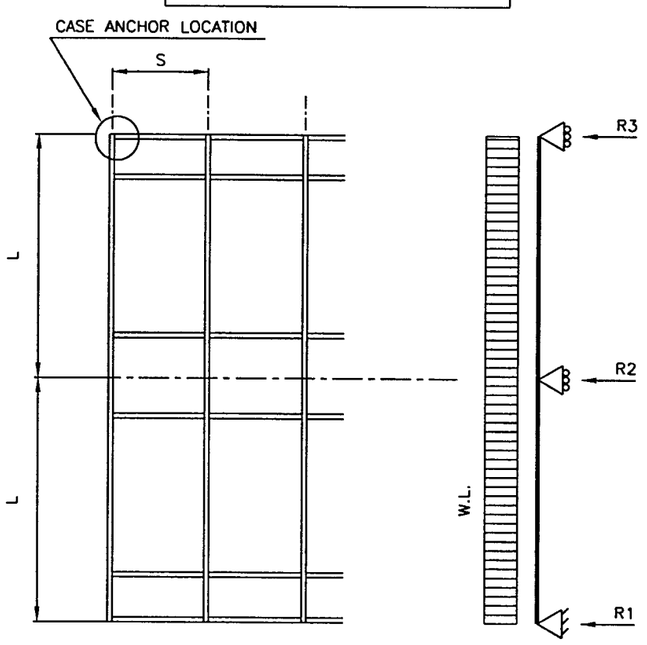

END REACTION $R3 = \frac{3\ WL}{8}$

TWIN SPAN

130 P.S.F. OR LESS

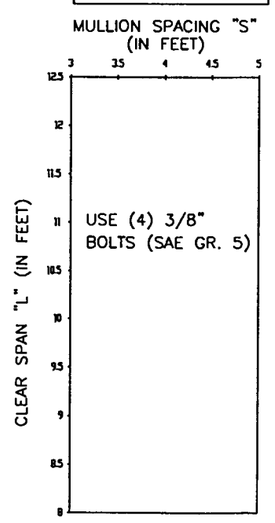

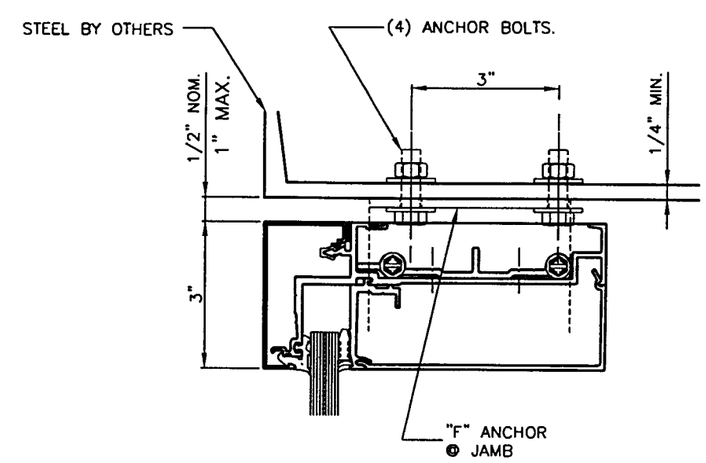

STEEL

ANCHOR BOLT SELECTION GUIDE FOR "F" ANCHOR

Approved as complying with the Florida Building Code
Date APRIL 25, 2002
NOA# 01-1120.05
Miami Dade Product Control Division
By Ishaq I. Chanda

RESERVED FOR METRO-DADE USE ONLY

YKK AP America

YKK AP AMERICA, INC.
5630 GWALTNEY DRIVE
ATLANTA, GEORGIA 30336

SYSTEM	SCALE
YHC 300 I.G. (130psf)	NONE

DESCRIPTION: ANCHOR BOLT SELECTION GUIDE

DRAWING NUMBER	REV.
YHC 300 I.G.-130S	A

APPROVED BY	DRAWN BY	DATE	SHEET NO.
JIA	RTB	8/22/01	17 OF 19

G:\SYSDWGS\YHC300IG\DADE\130PSF\C300I130S17.DWG

REV.	DESCRIPTION	BY	DATE
A	NO CHANGE	RTB	1/22/02

YHC 300 IG SINGLE SPAN

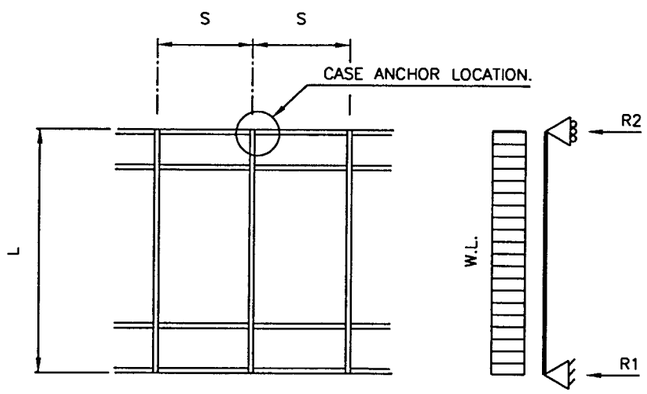

END REACTION $R1 = R2 = \frac{WL}{2}$

SINGLE SPAN

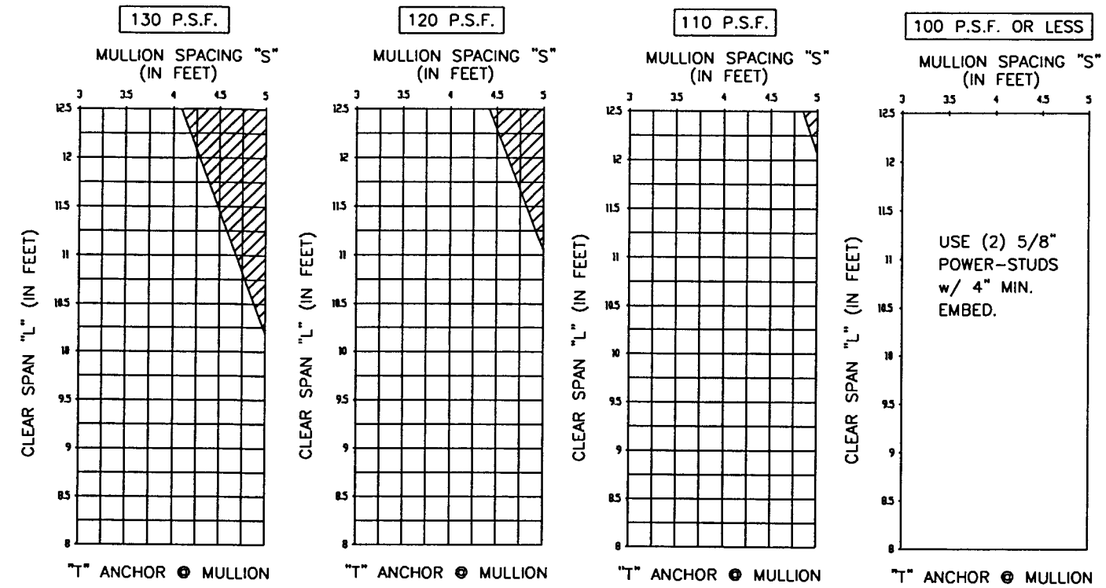

☐ USE (2) 5/8" POWER-STUDS W/ 4" EMBED.

▨ USE (2) 3/4" POWER-STUDS W/ 5" EMBED.

YHC 300 ISG TWIN SPAN

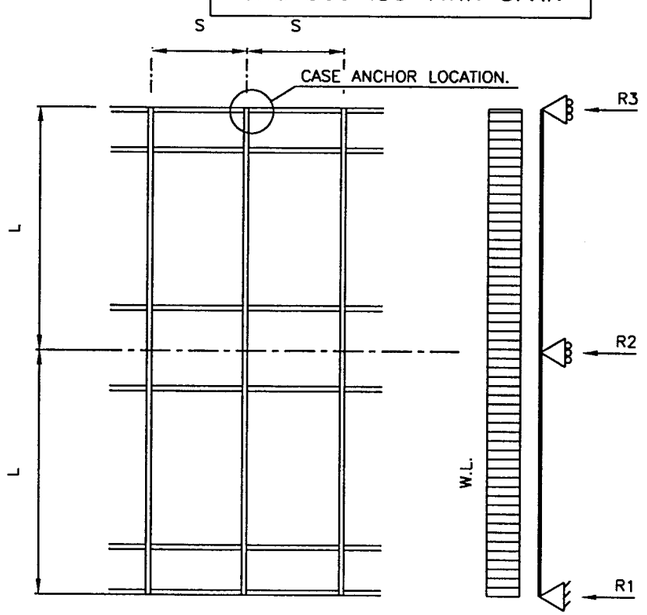

END REACTION $R3 = \frac{3\ WL}{8}$

TWIN SPAN

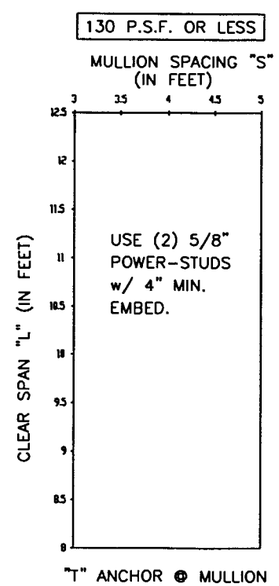

NOTES:
ANCHORING INTO CONCRETE ASSUMING THE FOLLOWING:
1. CONCRETE TO BE 3000 PSI MIN.
2. EDGE DISTANCE AS SHOWN MIN.
3. SIZES AND EMBEDMENT AS PER CHARTS.

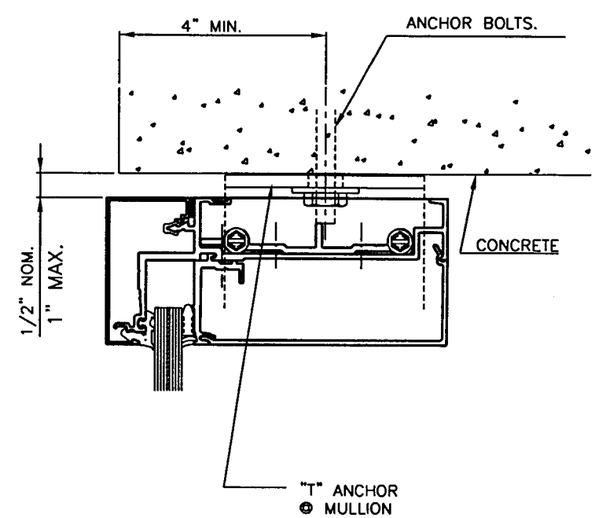

CONCRETE

ANCHOR BOLT SELECTION GUIDE FOR "T" ANCHOR

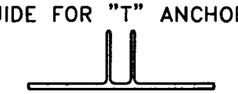

Approved as complying with the Florida Building Code
Date APRIL 25, 2002
NOA# 01-1120.05
Miami Dade Product Control Division
By Shaq I. Chanda

RESERVED FOR METRO-DADE USE ONLY

YKK AP America
YKK AP AMERICA, INC.
5630 GWALTNEY DRIVE
ATLANTA, GEORGIA 30336

SYSTEM	SCALE
YHC 300 I.G. (130psf)	NONE
DESCRIPTION: ANCHOR BOLT SELECTION GUIDE	
DRAWING NUMBER: YHC 300 I.G.-130S	REV. A

APPROVED BY	DRAWN BY	DATE	SHEET NO.
JIA	RTB	8/22/01	18 OF 19

G:\SYSDWGS\YHC300IG\DADE\130PSF\C300I130S18.DWG

REV.	DESCRIPTION	BY	DATE
A	NO CHANGE	RTB	1/22/02

YHC 300 IG SINGLE SPAN

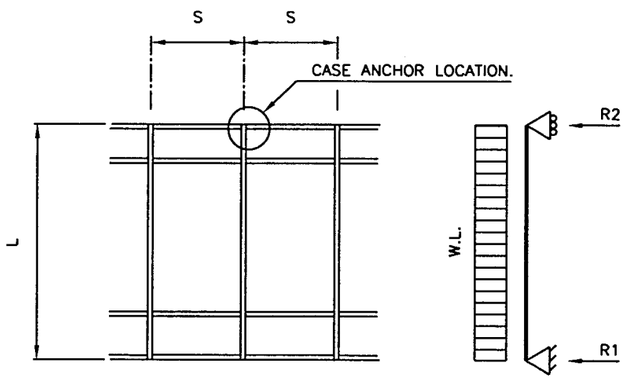

END REACTION $R1=R2=\frac{WL}{2}$

SINGLE SPAN

130 P.S.F. OR LESS

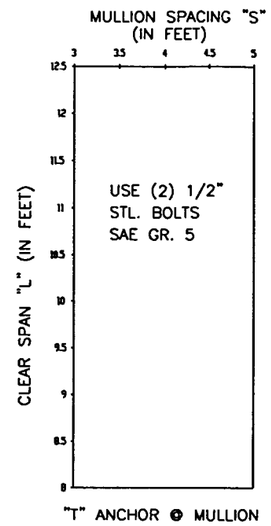

"T" ANCHOR @ MULLION

YHC 300 IG TWIN SPAN

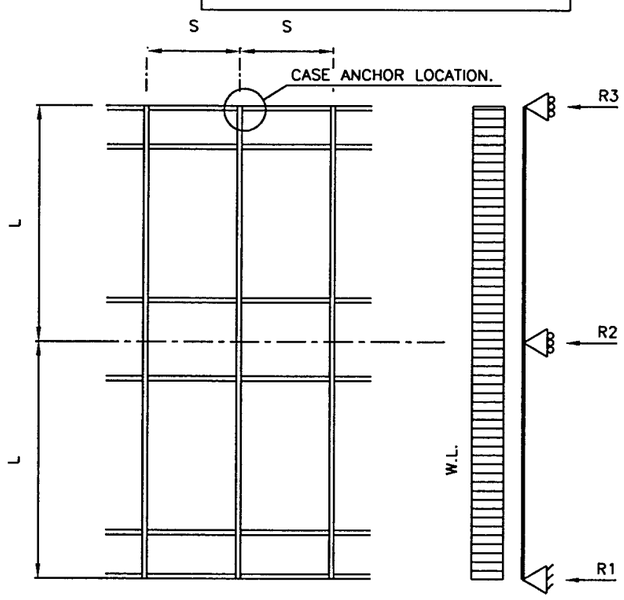

END REACTION $R3=\frac{3\ WL}{8}$

TWIN SPAN

130 P.S.F. OR LESS

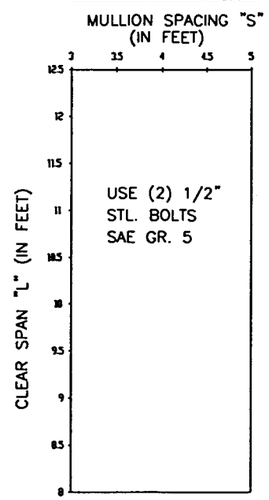

"T" ANCHOR @ MULLION

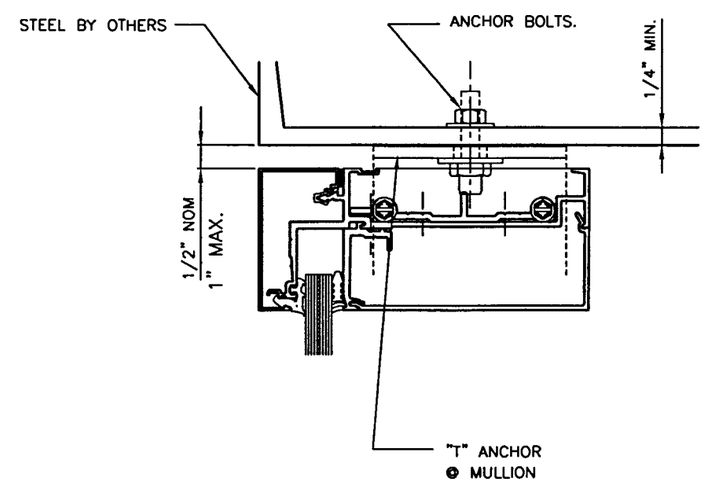

STEEL

ANCHOR BOLT SELECTION GUIDE FOR "T" ANCHOR

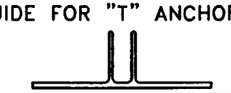

Approved as complying with the Florida Building Code
Date APRIL 26, 2002
NOA# 01-1120.05
Miami Dade Product Control Division
By Ishaq I. Chanda

RESERVED FOR METRO-DADE USE ONLY

YKK AP AMERICA, INC.
5630 GWALTNEY DRIVE
ATLANTA, GEORGIA 30336

SYSTEM	SCALE
YHC 300 I.G. (130psf)	NONE

DESCRIPTION: ANCHOR BOLT SELECTION GUIDE

DRAWING NUMBER	REV.
YHC 300 I.G.-130S	A

APPROVED BY	DRAWN BY	DATE	SHEET NO.
JIA	RTB	8/22/01	19 OF 19

G:\SYSDWGS\YHC300IG\DADE\130PSF\C300I130S19.DWG