MIAMI-DADE

BUILDING CODE COMPLIANCE OFFICE (BCCO)
PRODUCT CONTROL DIVISION

MIAMI-DADE COUNTY, FLORIDA
METRO-DADE FLAGLER BUILDING
140 WEST FLAGLER STREET, SUITE 1603
MIAMI, FLORIDA 33130-1563
(305) 375-2901 FAX (305) 375-2908

NOTICE OF ACCEPTANCE (NOA)

Therma-Tru Corporation
108 Mutzfeld Road
Butler, IN 46721

SCOPE:

This NOA is being issued under the applicable rules and regulations governing the use of construction materials. The documentation submitted has been reviewed by Miami-Dade County Product Control Division and accepted by the Board of Rules and Appeals (BORA) to be used in Miami Dade County and other areas where allowed by the Authority Having Jurisdiction (AHJ).

This NOA shall not be valid after the expiration date stated below. The Miami-Dade County Product Control Division (In Miami Dade County) and/or the AHJ (in areas other than Miami Dade County) reserve the right to have this product or material tested for quality assurance purposes. If this product or material fails to perform in the accepted manner, the manufacturer will incur the expense of such testing and the AHJ may immediately revoke, modify, or suspend the use of such product or material within their jurisdiction. BORA reserves the right to revoke this acceptance, if it is determined by Miami-Dade County Product Control Division that this product or material fails to meet the requirements of the applicable building code.

This product is approved as described herein, and has been designed to comply with the High Velocity Hurricane Zone of the Florida Building Code.

DESCRIPTION: "Fiber Classic/Smooth Star" 6'8" Outswing Opaque Insulated Fiberglass Door w/Sidelites

APPROVAL DOCUMENT: Drawing No. **S-2096**, dated 08/09/01, with revision #2 dated 05/18/02, titled "Fiber Classic"/"Smooth Star" up to 105.5" x 6-8 w & w/o SL, Outswing, sheets 1 through 8, prepared by R. W. Building Consultants, Inc., bearing the Miami-Dade County Product Control Approval stamp with the Notice of Acceptance number and approval date by the Miami-Dade County Product Control Division.

MISSILE IMPACT RATING: None

LABELING: Each unit shall bear a permanent label with the manufacturer's name or logo, city, state and following statement: "Miami-Dade County Product Control Approved", unless otherwise noted herein.

RENEWAL of this NOA shall be considered after a renewal application has been filed and there has been no change in the applicable building code negatively affecting the performance of this product.

TERMINATION of this NOA will occur after the expiration date or if there has been a revision or change in the materials, use, and/or manufacture of the product or process. Misuse of this NOA as an endorsement of any product, for sales, advertising or any other purposes shall automatically terminate this NOA. Failure to comply with any section of this NOA shall be cause for termination and removal of NOA.

ADVERTISEMENT: The NOA number preceded by the words Miami-Dade County, Florida, and followed by the expiration date may be displayed in advertising literature. If any portion of the NOA is displayed, then it shall be done in its entirety.

INSPECTION: A copy of this entire NOA shall be provided to the user by the manufacturer or its distributors and shall be available for inspection at the job site at the request of the Building Official.
This NOA consists of this page 1 as well as approval document mentioned above.
The submitted documentation was reviewed by **Manuel Perez, P.E.**

PRODUCT CONTROL ACCEPTED

NOA No 01-1126.01
Expiration Date: July 11, 2007
Approval Date: July 11, 2002

Therma-Tru Corporation

NOTICE OF ACCEPTANCE: EVIDENCE SUBMITTED
(For File ONLY. Not part of NOA)

A. DRAWINGS

1. Manufacturer's die drawings and sections.
2. Drawing No. **S-2096**, dated 08/09/01, with revision 1 dated 01/31/02, titled "Fiber Classic"/"Smooth Star" up to 105.5" x 6-8 w & w/o SL, Outswing, sheets 1 through 8, prepared by R. W. Building Consultants, Inc.

B. TESTS

1. Test reports on 1) Air Infiltration Test, per SFBC, PA 202-94
2) Uniform Static Air Pressure Test, Loading per SFBC PA 202-94
3) Water Resistance Test, per SFBC, PA 202-94
4`) Forced Entry Test, per SFBC 3603.2 (b) and PA 202-94
along with marked-up drawings and installation diagram of a "Smooth Star" series opaque fiberglass door, prepared by ETC Laboratories, Test Report No. **ETC 01-741-10700.0**, dated 08/24/01, signed and sealed by Wendell Haney P.E.

2. Test reports on 1) Air Infiltration Test, per SFBC, PA 202-94
2) Uniform Static Air Pressure Test, Loading per SFBC PA 202-94
3) Water Resistance Test, per SFBC, PA 202-94
4) Forced Entry Test, per SFBC 3603.2 (b) and PA 202-94
along with marked-up drawings and installation diagram of a "Fiber Classic" series opaque fiberglass swing door, prepared by ETC Laboratories, Test Report No. **ETC 01-741-11008.0**, dated 09/13/01, signed and sealed by Joseph L. Dolden, P.E.

3. Test reports on 1) Air Infiltration Test, per SFBC, PA 202-94
2) Uniform Static Air Pressure Test, Loading per SFBC PA 202-94
3) Water Resistance Test, per SFBC, PA 202-94
4) Forced Entry Test, per SFBC 3603.2 (b) and PA 202-94
along with marked-up drawings and installation diagram of a "Fiber Classic" series opaque fiberglass swing door, prepared by ETC Laboratories, Test Report No. **ETC 01-741-10702.0**, dated 08/06/01, signed and sealed by Wendell Haney, P.E.

C. CALCULATIONS

1. Anchor Calculations and structural analysis dated 11/07/01, prepared, signed and sealed by Lyndon F. Schmidt, P.E.

Manuel Perez, P.E.
Product Control Examiner
NOA No 01-1126.01
Expiration Date: July 11, 2007
Approval Date: July 11, 2002

Therma-Tru Corporation

NOTICE OF ACCEPTANCE: EVIDENCE SUBMITTED
(For File ONLY. Not part of NOA)

D. MATERIAL CERTIFICATIONS

1. Notice of Acceptance No. **01-1120.07** issued to Therma-Tru Corporation for "Therma-Tru "Fiberglass" Door Skin" dated 01/17/02, expiring on 01/18/07.
2. Notice of Acceptance No. **01-1120.08** issued to Therma-Tru Corporation for "Therma-Tru Series "BTS, TCM, PVC, SMC" Lite Frames" dated 01/18/02, expiring on 01/18/07.

E. STATEMENTS

1. Statement letter of conformance and no financial interest, dated November 07, 2001, signed and sealed by Lyndon F. Schmidt, P.E.
2. Statement letter of no financial interest, dated April 16, 2001, signed by Steven Kepler.

F. OTHER

1. None.

Manuel Perez, P.E.
Product Control Examiner
NOA No 01-1126.01
Expiration Date: July 11, 2007
Approval Date: July 11, 2002

THERMA-TRU®

"FIBER CLASSIC"/"SMOOTH STAR" OUTSWING 6-8 SINGLE AND DOUBLE W/& W/OUT SIDELITES. INSULATED FIBERGLASS DOOR WITH WOOD FRAMES.

GENERAL NOTES

1. THIS PRODUCT IS DESIGNED TO COMPLY WITH FLORIDA BUILDING CODE.
2. WOOD BUCKS BY OTHERS, MUST BE ANCHORED PROPERLY TO TRANSFER LOADS TO THE STRUCTURE.
3. PRODUCT ANCHORS SHALL BE AS LISTED AND SPACED AS SHOWN ON DETAILS. ANCHOR EMBEDMENT TO BASE MATERIAL SHALL BE BEYOND WALL DRESSING OR STUCCO.
4. DESIGNED PRESSURE RATING SEE TABLE PAGE 1.
5. WHEN THIS PRODUCT IS USE IN AREAS REQUIRING WINDBORNE DEBRIS PROTECTION, FLORIDA BUILDING CODE APPROVED IMPACT RESISTANT SHUTTERS ARE REQUIRED.
6. SIDELITES ARE AN OPTION AND CAN BE USED IN A SINGLE OR DOUBLE CONFIGURATION.

RESIDENTIAL INSULATED FIBERGLASS DOOR
(Common to all frame conditions)

Door & Sidelite Leaf Construction:
Face sheets: Fiberglass avg. min. yield strength Fy(min.)=6,000 psi
SmoothStar – 0.070" minimum skin thickness
FiberClassic – 0.110" minimum skin thickness
Core design: Polyurethane foam core, with1.9 lbs. density by BASF.
Panel Construction: The panel skin is constructed from a 0.070" thk. sheet molding compound (SMC). The interior cavity is filled with 1.9 lbs. density BASF polyurethane foam. The panel face sheets are glued to the wood stiles and rails. The LVL latch stile s reinforced with a wood lock block measuring 2.375" x 14.0" long at the strike and deadbolt location. The hinge stile is Finger Jointed Pine and the top and bottom rail are of a wood composite material. In the double door application the inactive door is fitted with an extruded aluminum astragal (Wind Jamber II) of 6063–T6 alloy.
Frame Construction: The frame is constructed from finger jointed pine. The header is joined to the side jambs with (3) 16ga. 1/2" crown x 2.5" long staples at each side. The mullions are secured together in a sidelite application using #8 x 2" long PFH Wood Screws (6) screws per each mullion. The units uses an Outswing Bumpface threshold, either a Low Profile or High Water Dam type.
Sidelite Glazing: The sidelite panels are sandwich glazed using a two piece lip lit frame. They are dry glazed on the exterior with an 1/8" thk. cellular glazing tape, (Stik–II Tape) & caulking with silicone. The lite frames are held together with a #8 x 1 1/2" long Plascrew.

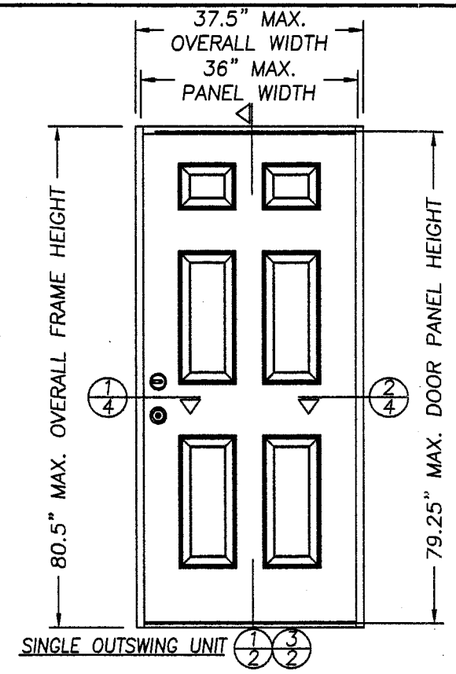

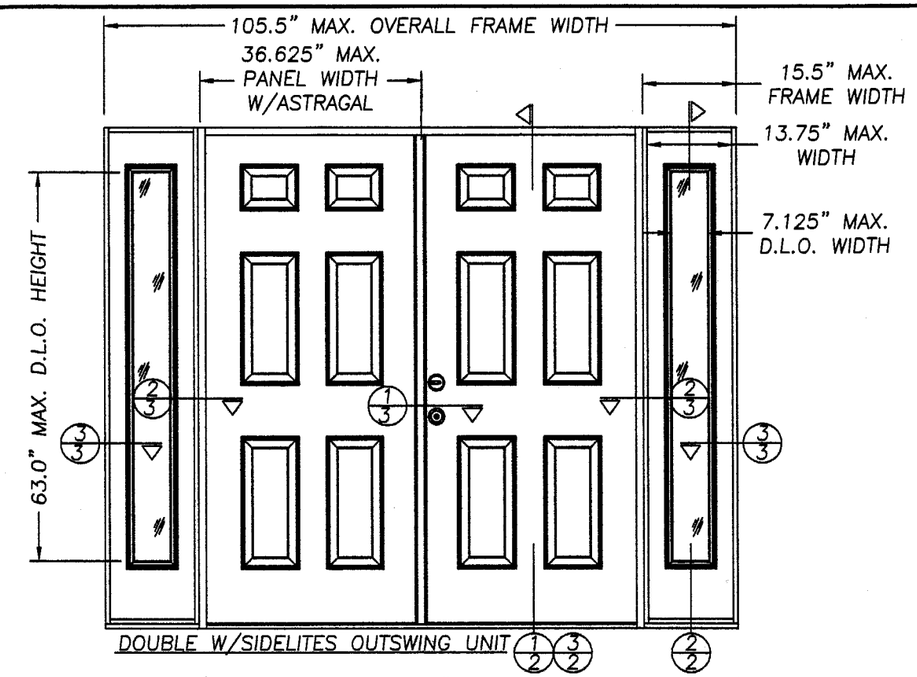

ALL MODELS ARE VIEWED FROM INTERIOR

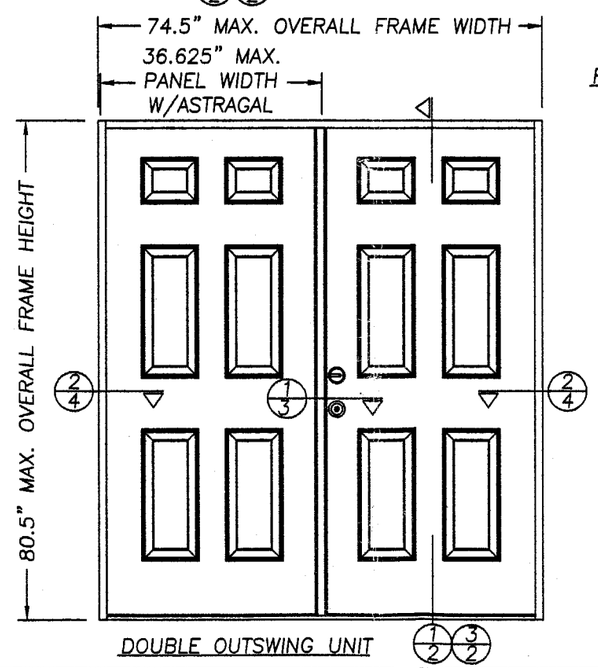

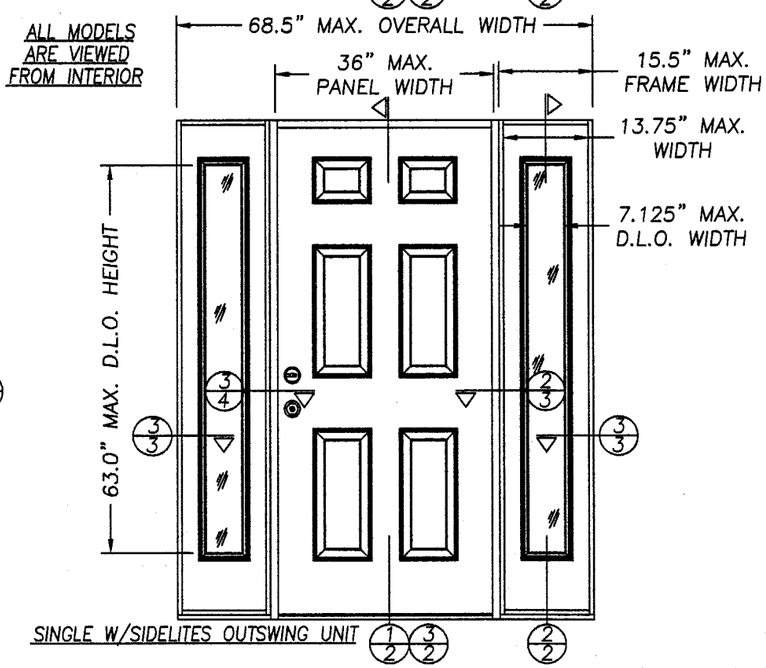

TABLE OF CONTENTS

SHEET #	DESCRIPTION
1	TYPICAL ELEVATIONS & GENERAL NOTES
2	VERTICAL CROSS SECTIONS
3	HORIZONTAL CROSS SECTIONS
4	HORIZONTAL CROSS SECTIONS & NOTES
5	ANCHORING LOCATIONS & DETAILS
6	ANCHORING LOCATIONS & GLAZING DETAILS
7	UNIT COMPONENTS
8	BILL OF MATERIALS & UNIT COMPONENTS

DESIGN PRESSURE RATING

UNIT TYPE	W/LOW PROFILE BUMP THRESHOLD (Where water infiltration req. is not needed)	W/HIGH DAM BUMP THRESHOLD (Where water infiltration req. is needed)
SINGLE	+ 67.0 PSF – 67.0 PSF	+ 67.0 PSF – 67.0 PSF
DOUBLE	+ 55.0 PSF – 55.0 PSF	+ 55.0 PSF – 55.0 PSF
SINGLE & DOUBLE WITH SIDELITES	+ 55.0 PSF – 55.0 PSF	+ 55.0 PSF – 55.0 PSF

Approved as complying with the Florida Buiding Code
Date JULY 11, 2002
NOA# 01-1126.01
Miami Dade Product Control Division
By Manuel Perez

THERMA-TRU CORPORATION
1687 WOODLANDS DRIVE
MAUMEE, OHIO
PH. (800) 537-8827

PRODUCT: "FIBER CLASSIC"/"SMOOTH STAR" UPTO 105.5" x 6–8 W&W/OUT 14" SL, OUTSWING
PART OR ASSEMBLY: TYPICAL ELEVATIONS & GENERAL NOTES

REVISIONS

NO.	DATE		BY
2	5/18/02	CLARIFY PRESSURE TABLE	RW
1	1/31/02	GENERAL REVISION	WN

RW BUILDING CONSULTANTS, INC.
813.684.3831

DATE: 08/09/01
SCALE: N.T.S.
DWG. BY: TJH
CHK. BY: RW
DRAWING NO.: S–2096
SHEET 1 OF 8

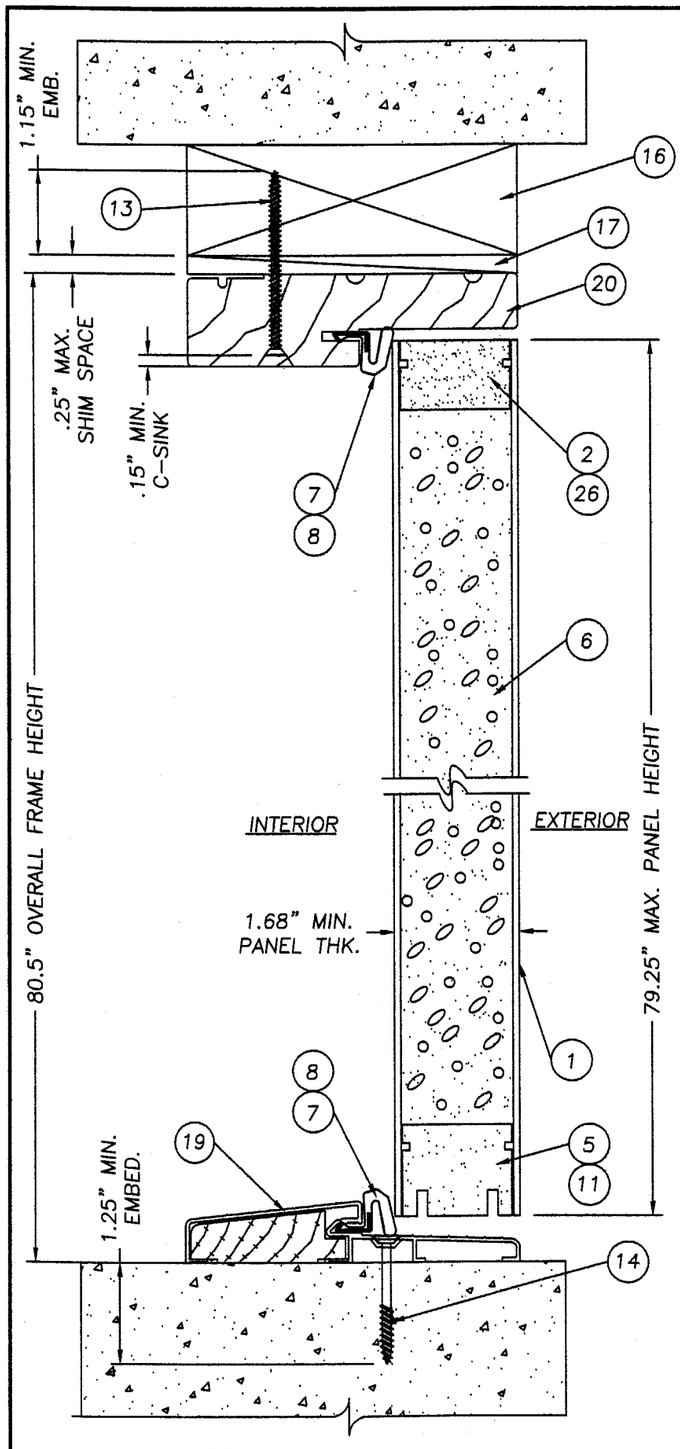

1/2 VERTICAL CROSS SECTION
DOOR PANEL W/ LOW PROFILE THRESHOLD, SEE DESIGN PRESSURE CHART SHT. 1 & GENERAL NOTE 6 SHT. 1

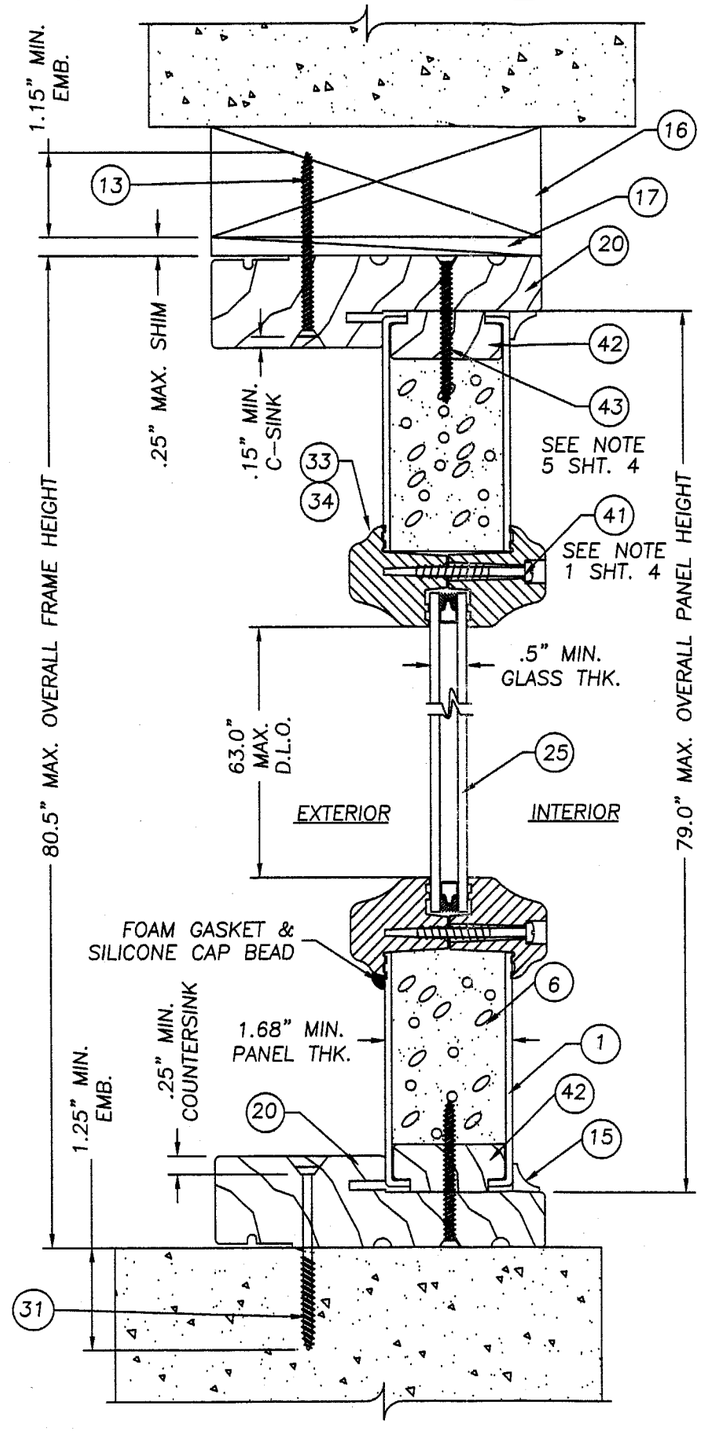

2/2 VERTICAL CROSS SECTION
SIDELITE PANEL

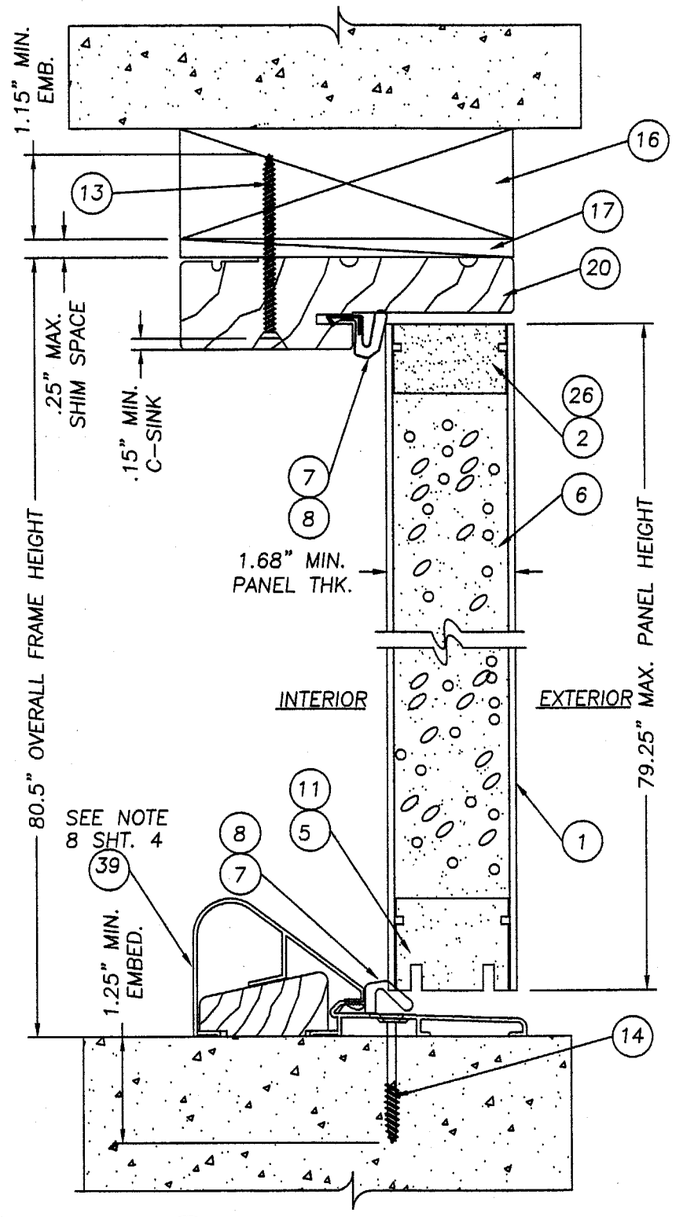

3/2 VERTICAL CROSS SECTION
DOOR PANEL W/ HIGH DAM THRESHOLD, SEE DESIGN PRESSURE CHART SHT. 1 & NOTE 8 SHT. 4

Approved as complying with the Florida Building Code
Date JULY 11, 2002
NOA# 01-1126.01
Miami Dade Product Control Division
By Manuel Serra

THERMA-TRU CORPORATION
1687 WOODLANDS DRIVE
MAUMEE, OHIO
PH. (800) 537-8827

PRODUCT: "FIBER CLASSIC"/SMOOTH STAR" UPTO 105.5" x 6-8 M&W/OUT 14" SL. OUTSWING
PART OR ASSEMBLY: VERTICAL CROSS SECTIONS

NO.	DATE	REVISIONS	BY
2	5/18/02	CLARIFY PRESSURE TABLE	RW
1	1/31/02	GENERAL REVISION	WN

RW BUILDING CONSULTANTS, INC.
813.684.3831

DATE: 08/09/01
SCALE: 1/2" = 1"
DWG. BY: TJH
CHK. BY: RW
DRAWING NO.: S-2096
SHEET 2 OF 8

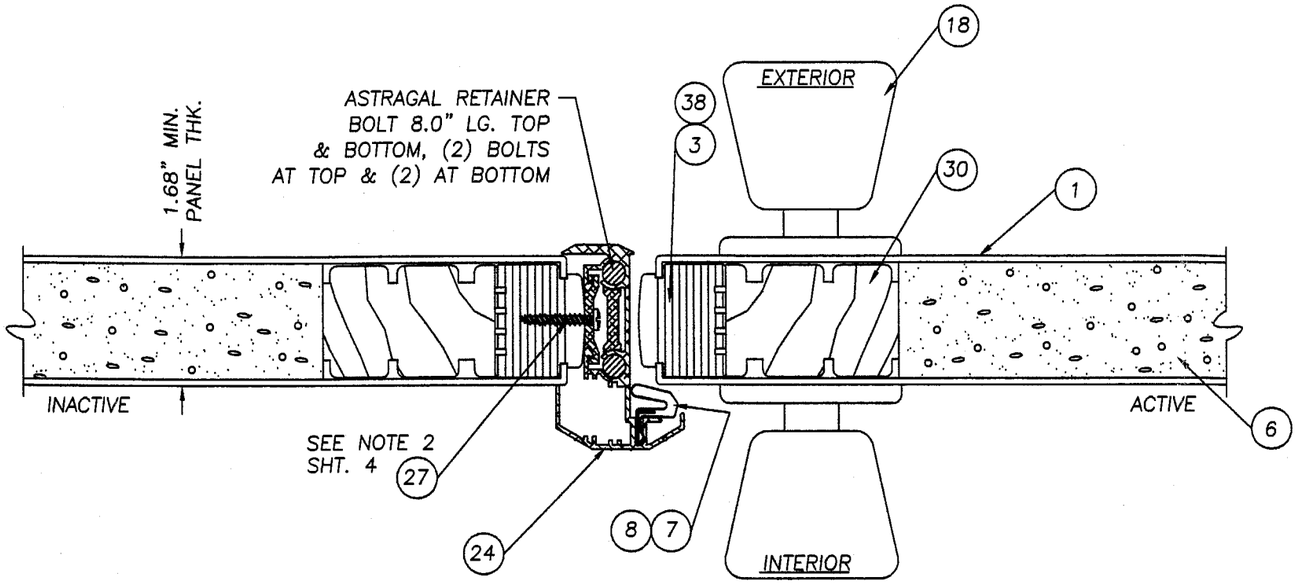

1/3 HORIZONTAL CROSS SECTION @ ASTRAGAL

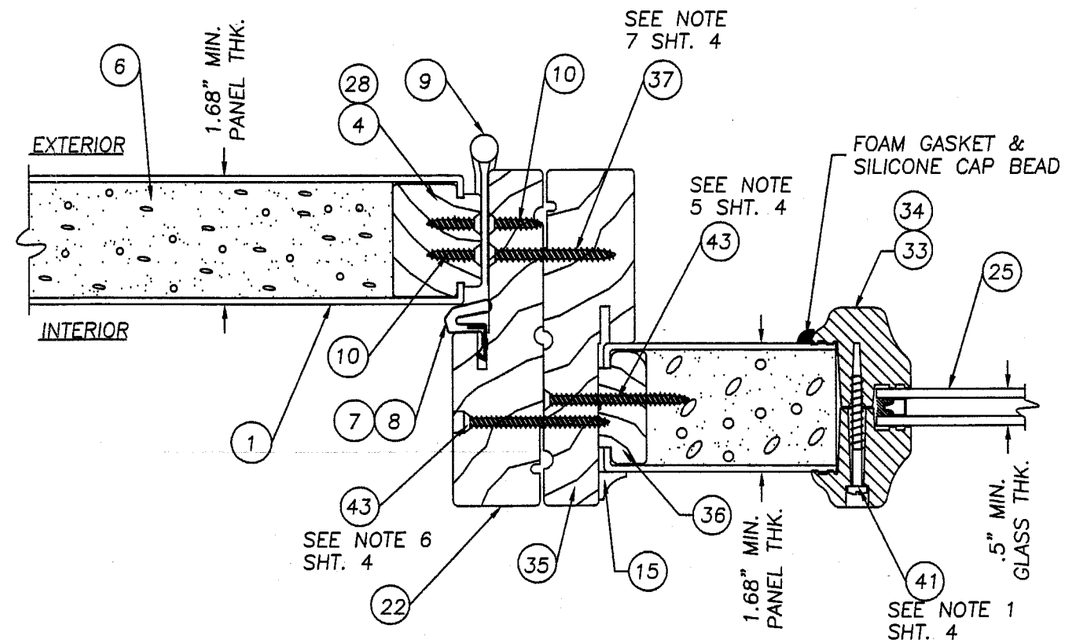

2/3 HORIZONTAL CROSS SECTION @ HINGE JAMB TO SIDELITE

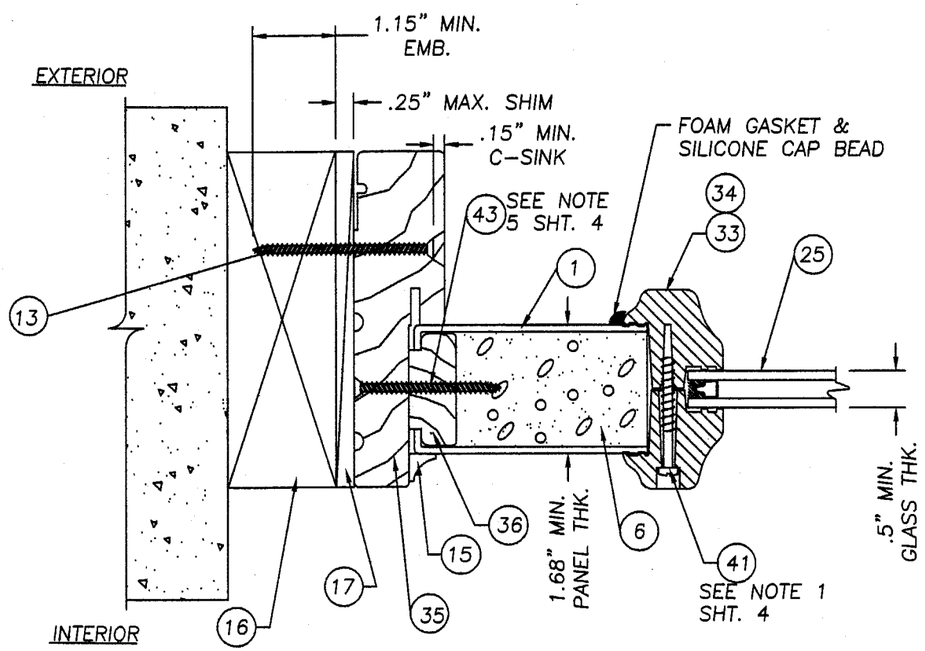

3/3 HORIZONTAL CROSS SECTION @ SIDELITE TO BUCK

Approved as complying with the Florida Buiding Code
Date JULY 11, 2002
NOA# 01-1126.01
Miami Dade Product Control Division
By Manuel Perez

THERMA-TRU CORPORATION
1687 WOODLANDS DRIVE
MAUMEE, OHIO
PH. (800) 537-8827

PRODUCT: "FIBER CLASSIC"/"SMOOTH STAR" UPTO 105.5" x 6-8 W&W/OUT 14" SL, OUTSWING
PART OR ASSEMBLY: HORIZONTAL CROSS SECTIONS

NO.	DATE	REVISIONS	BY
2	5/18/02	CLARIFY PRESSURE TABLE	RW
1	1/31/02	GENERAL REVISION	WN

RW BUILDING CONSULTANTS, INC.
813.684.3831

DATE: 08/09/01
SCALE: 1/2" = 1"
DWG. BY: TJH
CHK. BY: RW
DRAWING NO.: S-2096
SHEET 3 OF 8

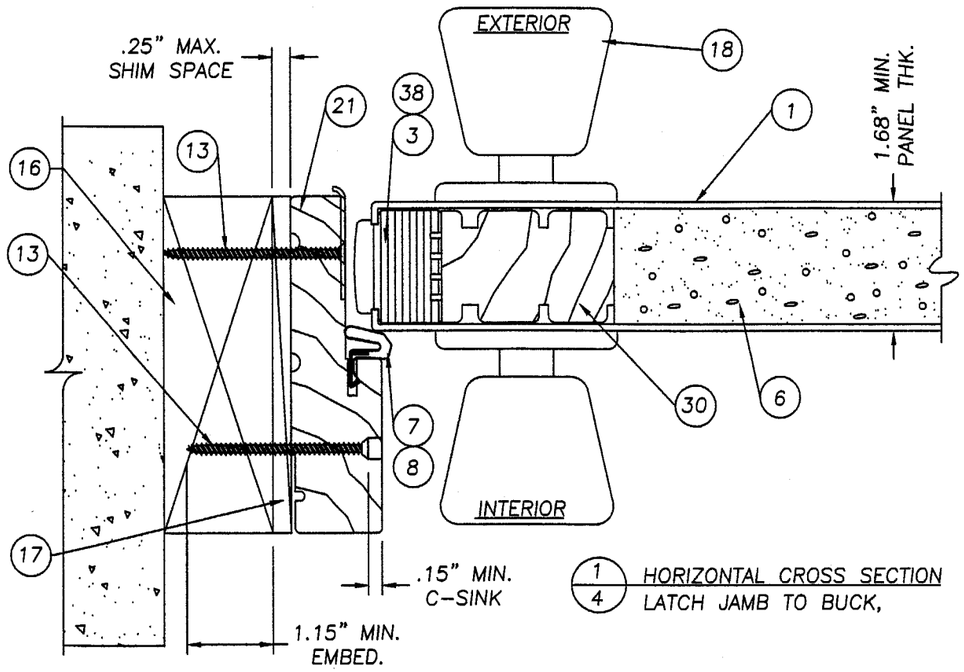

1/4 HORIZONTAL CROSS SECTION LATCH JAMB TO BUCK,

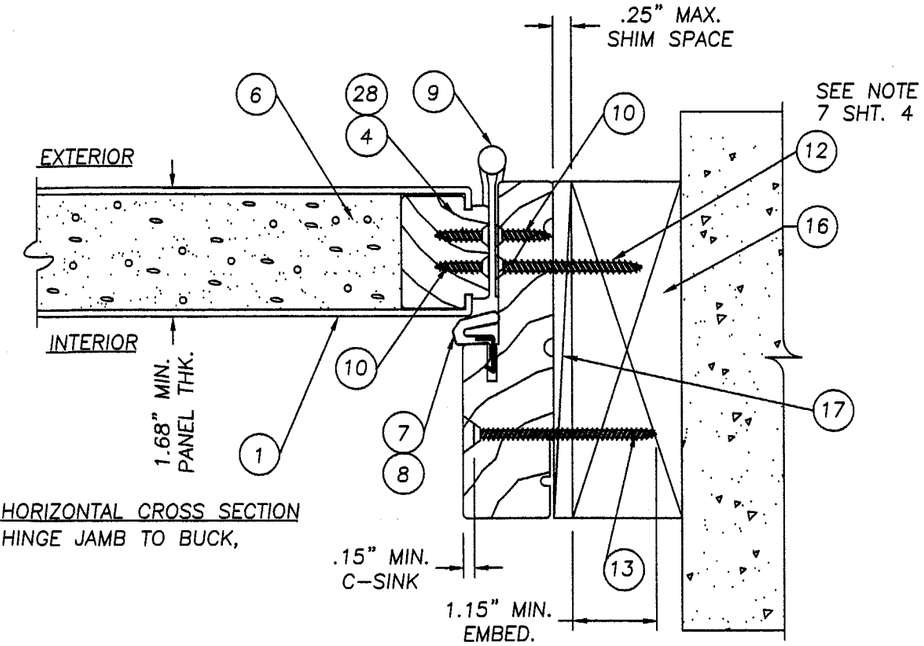

2/4 HORIZONTAL CROSS SECTION HINGE JAMB TO BUCK,

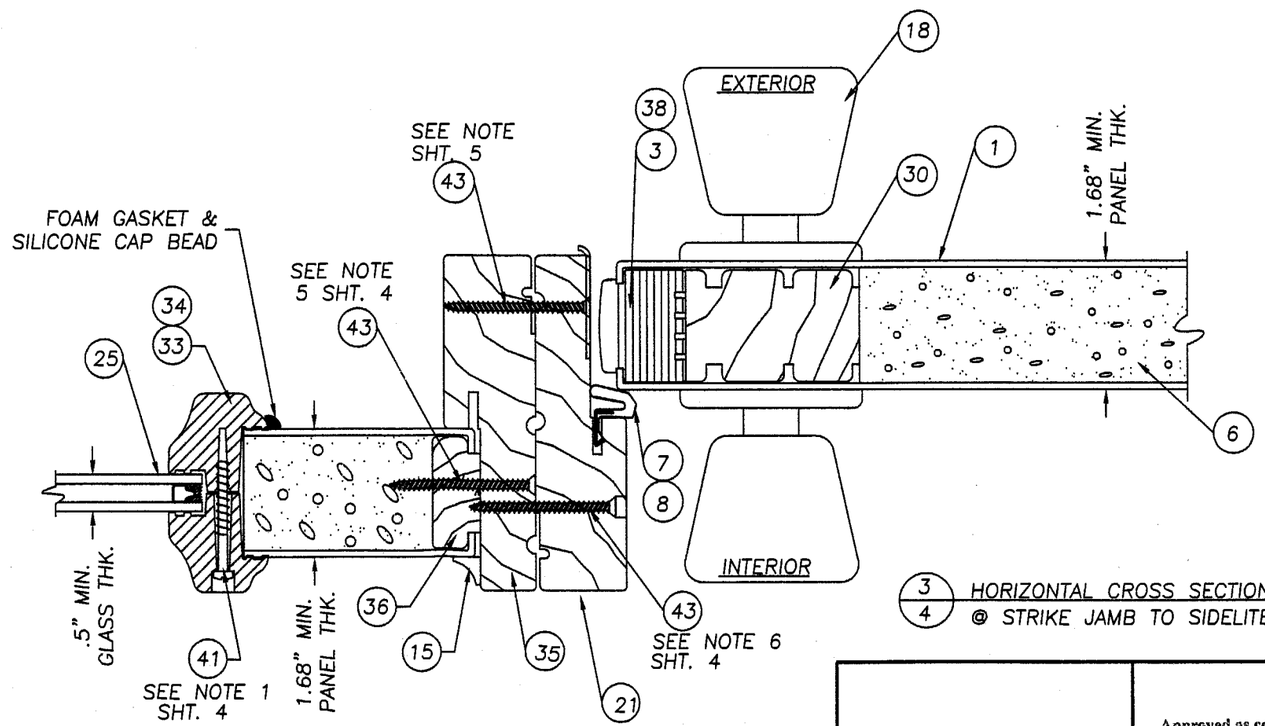

3/4 HORIZONTAL CROSS SECTION @ STRIKE JAMB TO SIDELITE

NOTES:

1. SPACING FOR ITEM NO. 41 (LITE FRAME SCREWS) IS AS FOLLOWS: VERTICAL FROM THE TOP DOWN ON SIDES; 5.5", 16.5", 27.5", 38.375", 49.375" & 60.375". HORIZONTAL THERE ARE (2) SCREW BOTH TOP AND BOTTOM AT 2.125" IN FROM EACH CORNER.
2. SPACING FOR ITEM NO. 27 (#8 x 1" PANHEAD SCREW) ATTACHING THE ASTRAGAL TO THE INACTIVE DOOR IS AS FOLLOWS: FROM THE TOP DOWN 1", 3", 5", 18.25", 40.5", 59.25", 74.25", 76.25" & 78.25".
3. THE HEAD JAMB IS ATTACHED TO THE SIDE JAMBS WITH (3) 16GA. x 1/2" CROWN x 2" STAPLES AT BOTH SIDE.
4. THE THRESHOLD IS ATTACHED TO THE SIDE JAMBS WITH (2) 16GA. x 1/2" CROWN x 2.5" STAPLES AT BOTH SIDE.
5. THE SIDELITE IS DIRECT SET INTO THE JAMB WITH (12) ITEM NO. 43 (#8 x 2" PFH. WOOD SCREW). THERE ARE (4) AT EACH VERTICAL JAMB, FROM THE TOP DOWN AT 13.5", 31", 48.5" 66". THERE ARE (2) AT THE HEADER AT 4" IN FROM THE OUTSIDE CORNERS OF THE FRAME. THERE ARE (2) AT THE SILL, 4" IN FROM THE OUTSIDE CORNERS.
6. SPACING FOR ITEM NO. 43 (#8 x 2" SCREW) SECURING THE MULLIONS TOGETHER IS THE SAME AS THE PERIMETER ANCHORING SCREWS. 6" DOWN FROM THE TOP AND UP FROM THE BOTTOM WITH (4) MORE SPACED AT 13.7" O.C.
7. WHEN ATTACHING THE HINGE TO THE JAMB AND THE BUCK USE ITEM NO. 12 (#10 x 2" SCREW). WHEN ATTACHING THE HINGE TO THE JAMB AND THE SIDELITE AT THE MULLION USE ITEM NO. 37 (#10 x 1 3/4" SCREW).
8. ITEM NO. 39 (HIGH DAM THRESHOLD) IS ONLY USED IN AN APPLICATION WHERE A HIGHER WATER PRESSURE MUST BE ACHIEVED.

Approved as complying with the Florida Buiding Code
Date JULY 11, 2002
NOA# 01-1126.01
Miami Dade Product Control Division
By Manuel Perez

THERMA-TRU CORPORATION
1687 WOODLANDS DRIVE
MAUMEE, OHIO
PH. (800) 537-8827

PRODUCT: "FIBER CLASSIC"/"SMOOTH STAR" UPTO 105.5" x 6-8 W&W/OUT 14" SL, OUTSWING

PART OR ASSEMBLY: HORIZONTAL CROSS SECTIONS & NOTES

REVISIONS

NO.	DATE		BY
2	5/18/02	CLARIFY PRESSURE TABLE	RW
1	1/31/02	GENERAL REVISION	WN

RW BUILDING CONSULTANTS, INC.
813.684.3831

DATE: 08/09/01
SCALE: 1/2" = 1"
DWG. BY: TJH
CHK. BY: RW
DRAWING NO.: S-2096
SHEET 4 OF 8

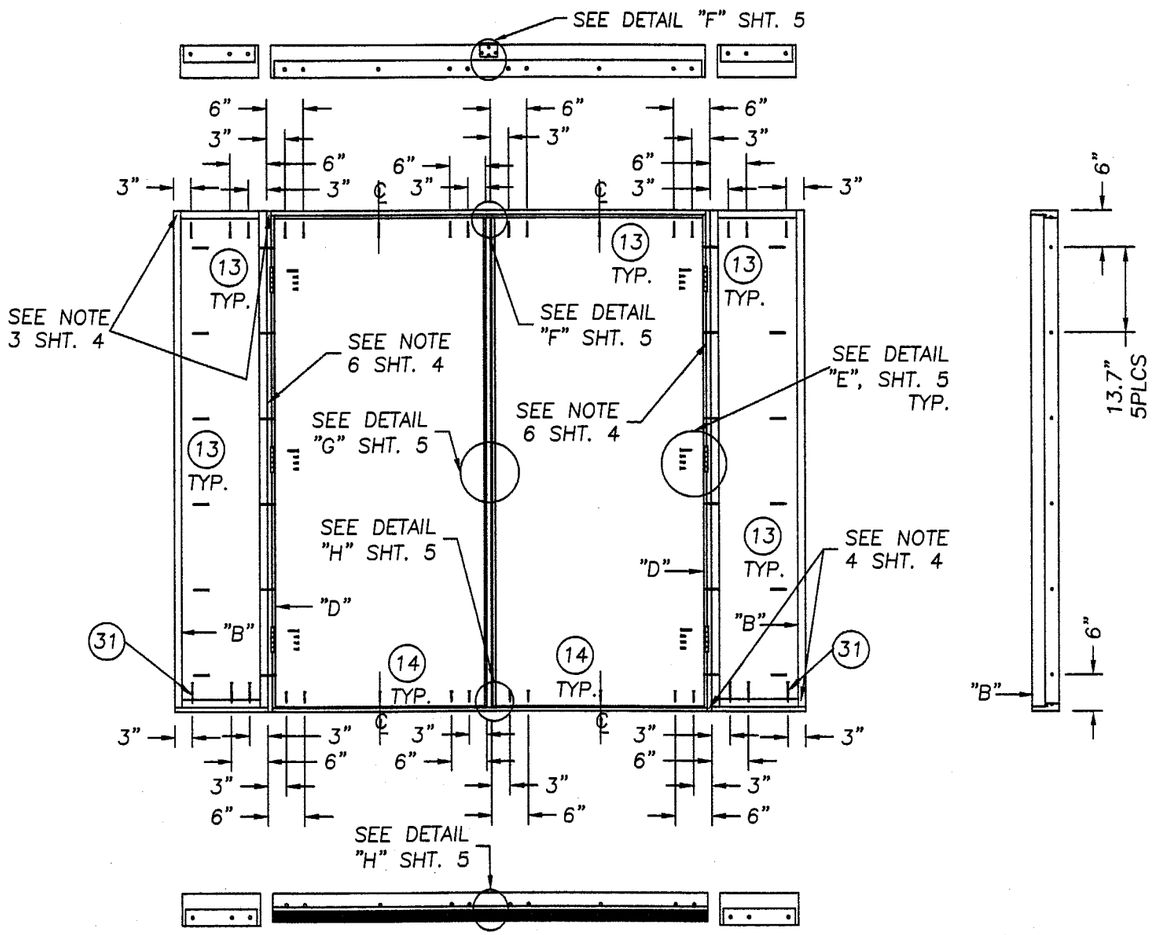

DOUBLE DOOR W/SIDELITES

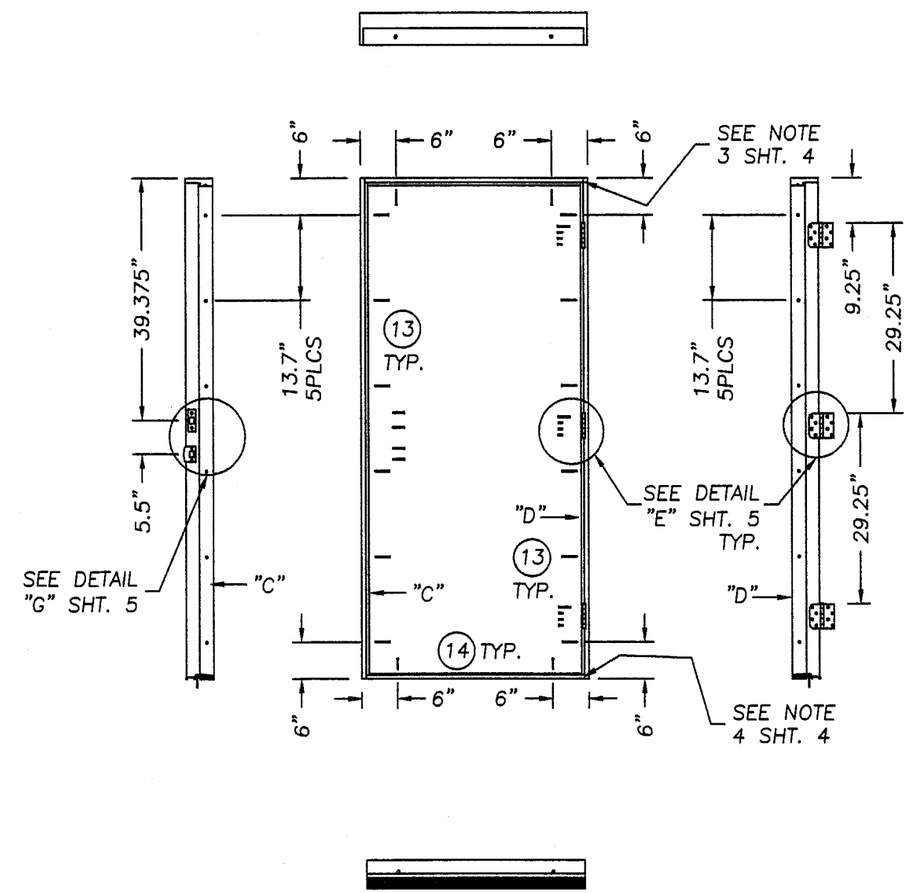

SINGLE DOOR

NOTE:
USE ITEM NO. 13 (#8 x 2 1/2" PFH WOOD SCREW) TO ATTACH THE STRIKE AND DEADBOLT PLATES TO THE JAMB OR ASTRAGAL EXCEPT IN THE MULLED APPLICATION WITH THE SIDELITE USE ITEM NO. 43 (#8 x 2" PFH WOOD SCREW).

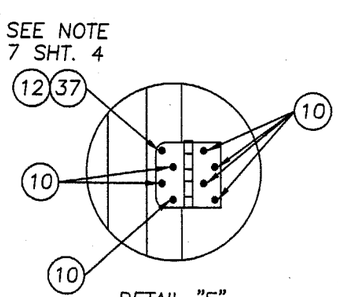

DETAIL "E"

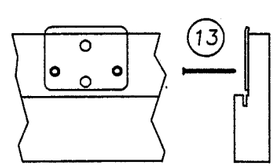

DETAIL "F"
ATTACH ASTRAGAL THROW BOLT STRIKE PLATE TO FRAME AS SHOWN.

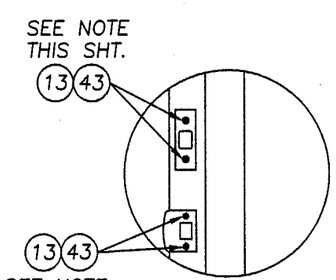

DETAIL "G"

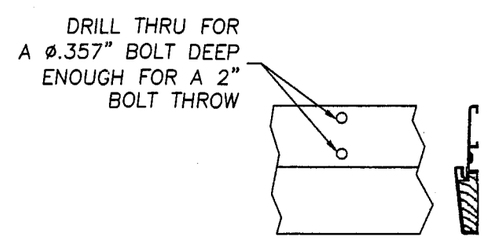

DETAIL "H"
ASTRAGAL THROW BOLTS AT THE THRESHOLD

Approved as complying with the Florida Buiding Code
Date JULY 11, 2002
NOA# 01-1126.01
Miami Dade Product Control Division
By Manuel Perez

THERMA-TRU CORPORATION
1687 WOODLANDS DRIVE
MAUMEE, OHIO
PH. (800) 537-8827

PRODUCT: "FIBER CLASSIC"/"SMOOTH STAR" UPTO 105.5" x 6-8 W&W/OUT 14" SL, OUTSWING

PART OR ASSEMBLY: ANCHORING LOCATIONS & DETAILS

REVISIONS

NO.	DATE		BY
2	5/18/02	CLARIFY PRESSURE TABLE	RW
1	1/31/02	GENERAL REVISION	WN

RW BUILDING CONSULTANTS, INC.
813.684.3831

DATE: 08/09/01
SCALE: N.T.S.
DWG. BY: TJH
CHK. BY: RW
DRAWING NO.: S-2096
SHEET 5 OF 8

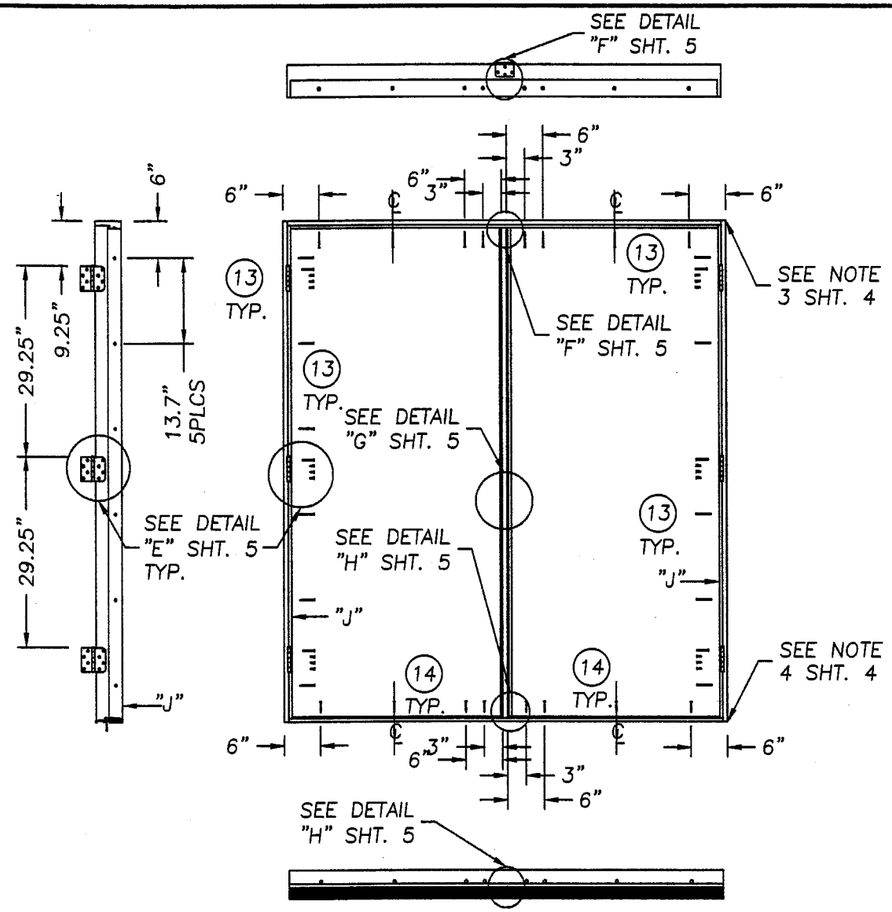

DOUBLE DOOR

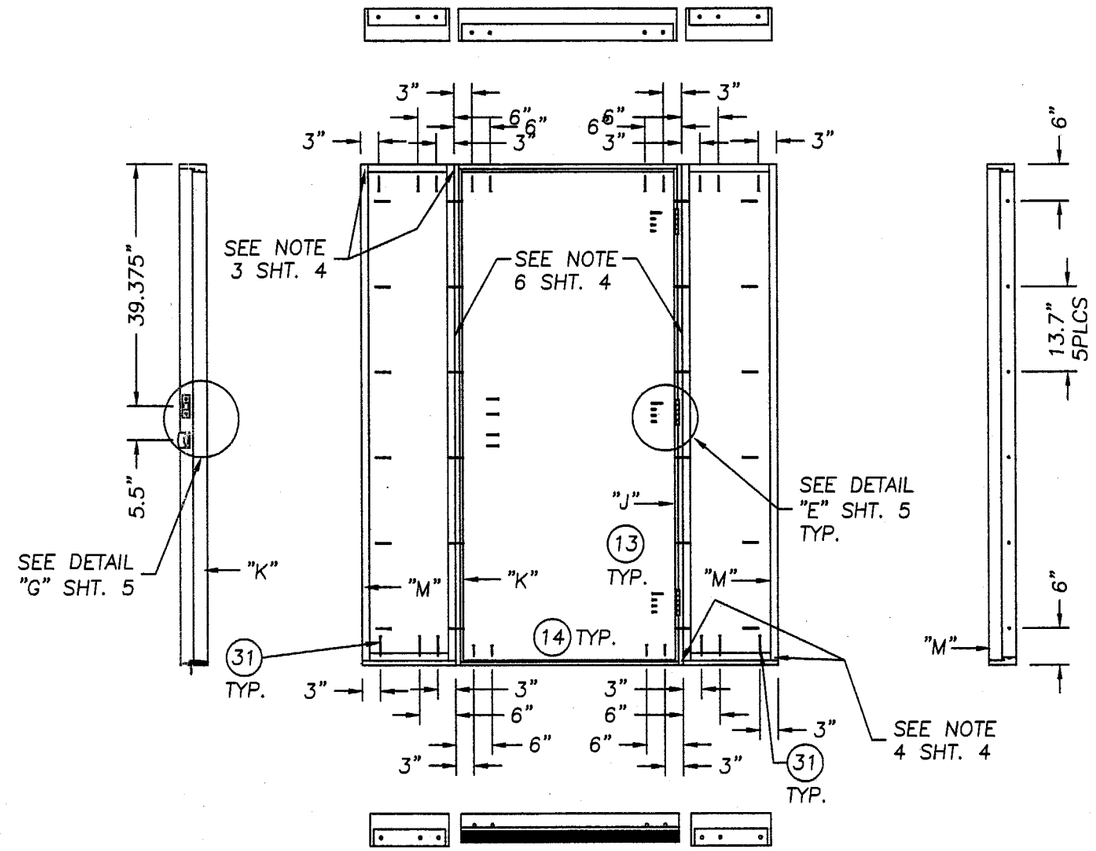

SINGLE DOOR W/SIDELITES

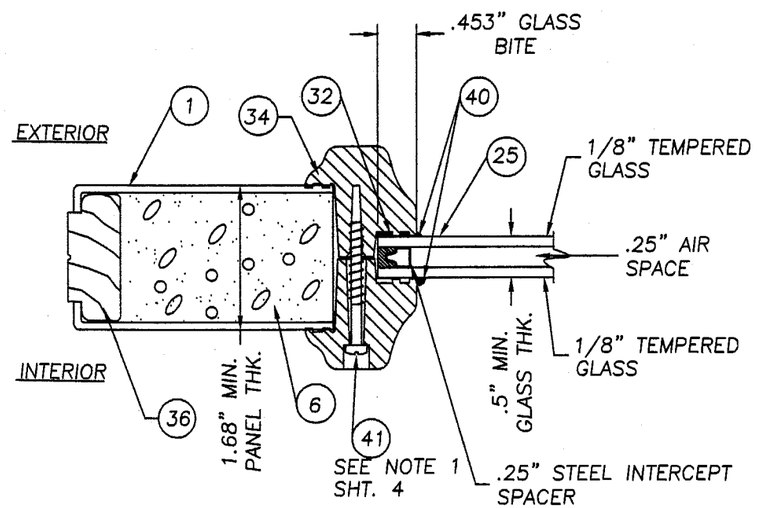

.5" INSULATED GLASS W/
TCM LITE FRAME GLAZING DETAIL

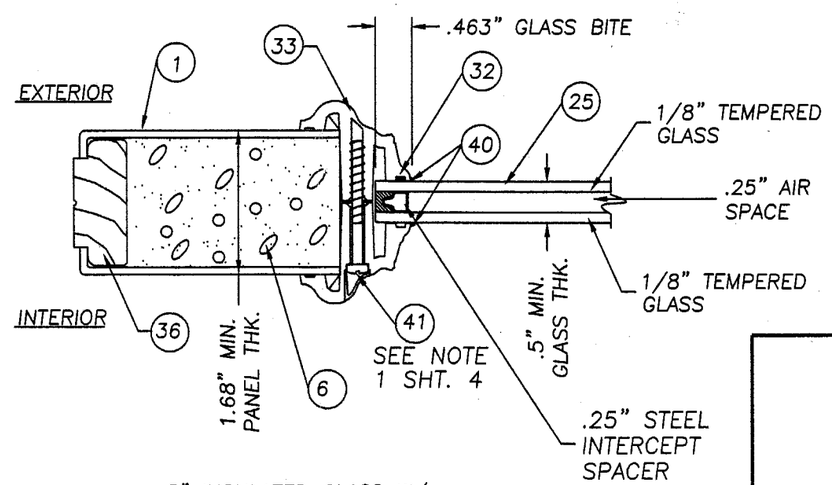

.5" INSULATED GLASS W/
BTS LITE FRAME GLAZING DETAIL

Approved as complying with the Florida Building Code
Date JULY 11, 2002
NOA# 01-1126.01
Miami Dade Product Control Division
By Manuel Perez

THERMA-TRU CORPORATION
1687 WOODLANDS DRIVE
MAUMEE, OHIO
PH. (800) 537-8827

PRODUCT: "FIBER CLASSIC"/"SMOOTH STAR" UPTO 105.5" x 6-8 W&W/OUT 14" SL, OUTSWING

PART OR ASSEMBLY: ANCHORING LOCATIONS & GLAZING DETAILS

REVISIONS

NO.	DATE		BY
2	5/18/02	CLARIFY PRESSURE TABLE	RW
1	1/31/02	GENERAL REVISION	WN

RW BUILDING CONSULTANTS, INC.
813.684.3831

DATE: 08/09/01
SCALE: N.T.S.
DWG. BY: TJH
CHK. BY: RW
DRAWING NO.: S-2096
SHEET 6 OF 8

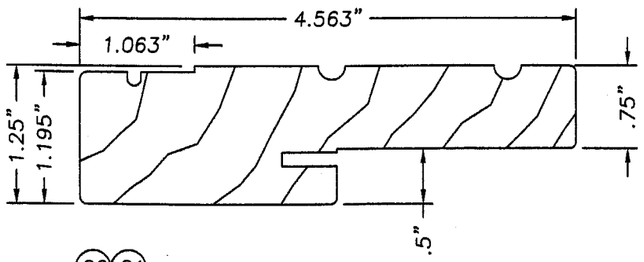

20 21 22 35

WOOD FRAME
FINGER JOINTED PONDEROSA PINE

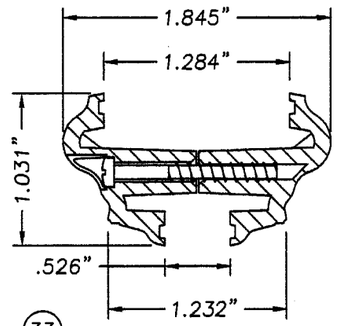

33

PLASTIC LIP LITE FRAME
EXTRUDED BTS

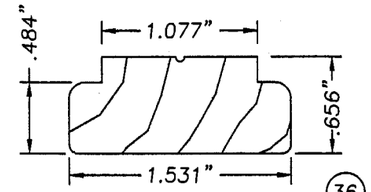

SIDELITE BLANK SIDE STILE 36
FINGER JOINTED PONDEROSA PINE

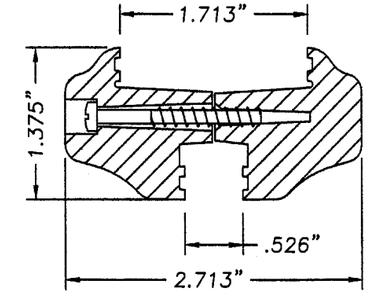

TCM (THERMA-TRU'S POLYPROPLENE)
34 PLASTIC LIP LITE FRAME
EXTRUDED TCM

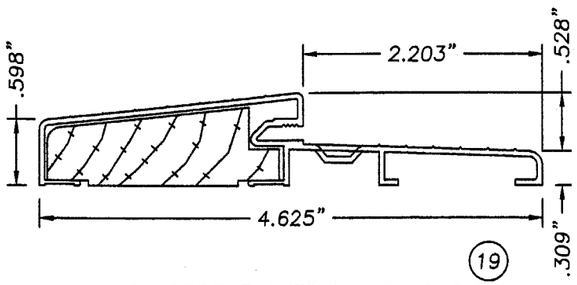

19

LOW PROFILE OUTSWING BUMP FACE
ALUMINUM/WOOD THRESHOLD
.050" WALL TYP.

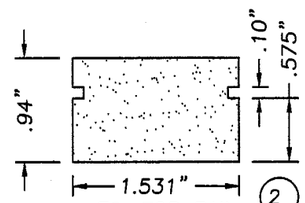

2

FC. TOP RAIL
WOOD COMPOSITE

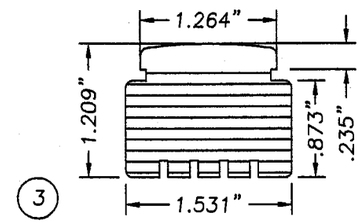

3

FC. LATCH SIDE STILE COMPOSITE

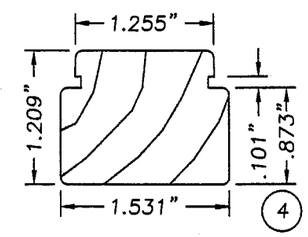

4

FC. WOOD HINGE SIDE STILE

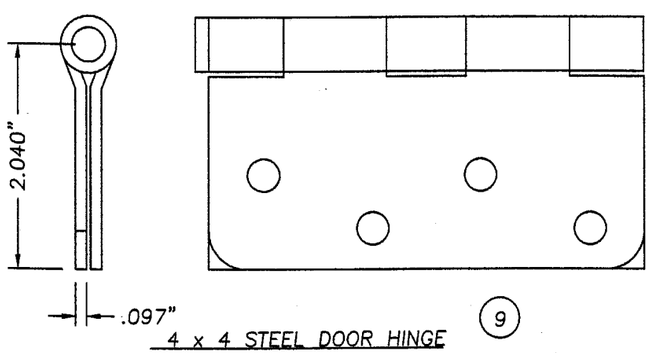

4 x 4 STEEL DOOR HINGE 9

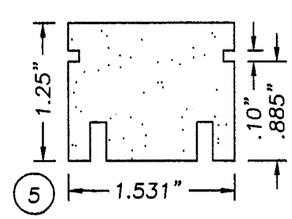

5

FC. BOTTOM RAIL
WOOD COMPOSITE

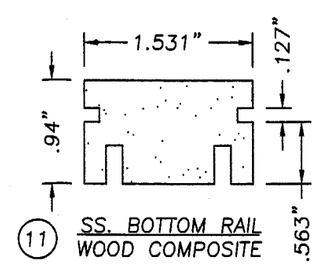

11 SS. BOTTOM RAIL
WOOD COMPOSITE

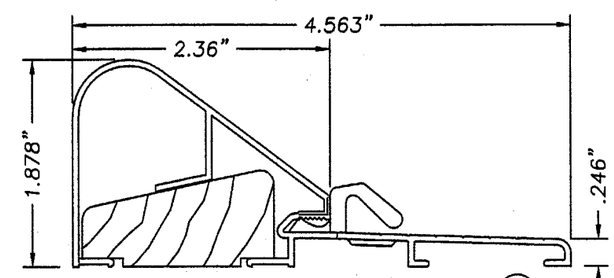

39

HIGH DAM THRESHOLD
ALUMINUM/WOOD THRESHOLD
.050" WALL TYP.
SEE NOTE 8 SHT. 4

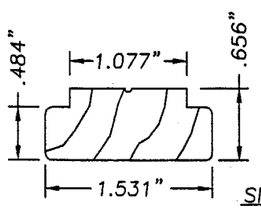

42

SIDELITE TOP & BOTTOM RAIL
FINGER JOINTED PONDEROSA PINE

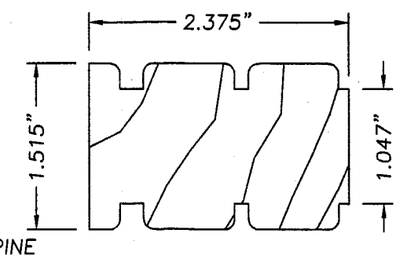

30

WOOD LOCK BLOCK
FINGER JOINTED PONDEROSA PINE

Approved as complying with the Florida Building Code
Date JULY 11, 2002
NOA# 01-1126.01
Miami Dade Product Control Division
By Manuel Perez

THERMA-TRU CORPORATION
1687 WOODLANDS DRIVE
MAUMEE, OHIO
PH. (800) 537-8827

PRODUCT: "FIBER CLASSIC"/"SMOOTH STAR" UPTO 105.5" x 6-8 W&W/OUT 14" SL, OUTSWING
PART OR ASSEMBLY: UNIT COMPONENTS

NO.	DATE	REVISIONS	BY
2	5/18/02	CLARIFY PRESSURE TABLE	RW
1	1/31/02	GENERAL REVISION	WN

RW BUILDING CONSULTANTS, INC.
813.684.3831

DATE: 08/09/01
SCALE: N.T.S
DWG. BY: TJH
CHK. BY: RW
DRAWING NO.: S-2096
SHEET 7 OF 8

Item	DESCRIPTION	Material
1	SMOOTHSTAR DOOR SKIN .070" MIN. THK. FIBERGLASS & FIBERCLASSIC DOOR SKIN .110" MIN. THK. FIBERGLASS BY THERMA-TRU with yield strength Fy(min.)=6,000 psi	FIBERGLASS
2	FC. TOP RAIL (1.531" x .94" THERMA-TRU WOOD COMPOSITE)	WOOD COMPOSITE
3	FC. LATCH STILE (THERMA-TRU, WOOD COMPOSITE 1.531" x 1.209")	WOOD COMPOSITE
4	FC. HINGE STILE (THERMA-TRU, PONDEROSA PINE 1.531" x 1.209")	WOOD
5	FC. BOTTOM RAIL (1.531" x 1.25" THERMA-TRU WOOD COMPOSITE)	WOOD COMPOSITE
6	POLYURETHANE FOAM (BASF, 1.9lbs. DENSITY)	FOAM
7	SHORT REACH COMPRESSION WEATHERSTRIP (THERMA-TRU)	FOAM
8	LONG REACH COMPRESSION WEATHERSTRIP (THERMA-TRU)	FOAM
9	4" x 4" HINGE .097" THK. (THERMA-TRU)	STEEL
10	#10 x 3/4" lg. PFH WOOD SCREW (Hinge to Frame)	STEEL
11	SS. BOTTOM RAIL (1.531" x .94" THERMA-TRU WOOD COMPOSITE)	WOOD COMPOSITE
12	#10 x 2" LG. PFH WOOD SCREW	STEEL
13	#8 x 2 1/2" LG. PFH WOOD SCREW	STEEL
14	3/16" TAPCON ANCHOR (ELCO, 1.75" MIN. LG.)	STEEL
15	3/8" COVE MOLDING	WOOD
16	2x INNER WOOD BUCK	WOOD
17	MAX. 1/4" SHIM MATERIAL	WOOD
18	KWIKSET TITAN 700 SERIES PASSAGE LOCK	–
19	ONE PIECE BUMP FACE THRESHOLD (THERMA-TRU)	ALUM./WOOD
20	4.563" x 1.25" HEADER (THERMA-TRU, PONDEROSA PINE)	WOOD
21	4.563" x 1.25" STRIKE JAMB (THERMA-TRU, PONDEROSA PINE)	WOOD
22	4.563" x 1.25" HINGE JAMB (THERMA-TRU, PONDEROSA PINE)	WOOD
23	KWIKSET TITAN 700 SERIES DEADBOLT	–
24	ASTRAGAL WINDJAMBER II WR68T (.052" WALL)	ALUM. 6063-T6
25	GLAZING, 1/2" INSULATED TEMPERED GLASS	GLASS
26	SS. TOP RAIL (1.531" x .94" THERMA-TRU WOOD COMPOSITE)	WOOD COMPOSITE
27	#8 x 1" LG. PANHEAD SHEET METAL SCREW	STEEL
28	SS. HINGE STILE (THERMA-TRU, PONDEROSA PINE 1.183" x 1.531")	WOOD
29	NOT USED	–
30	FC/SS WOOD LOCK BLOCK 2.375" x 1.515" (PONDEROSA PINE)	WOOD
31	3/16" TAPCON ANCHOR (ELCO, 2.5" MIN. LG.)	STEEL
32	1/8 THK. CELLULAR GLAZING TAPE (STIK-II TAPE)	–
33	PLASTIC LIP LITE FRAME (BTS, THERMA-TRU)	BTS
34	PLASTIC LIP LITE FRAME (TCM, THERMA-TRU)	TCM
35	4.563" x 1.25" BLANK JAMB (THERMA-TRU, PONDEROSA PINE)	WOOD
36	SIDELITE SIDE STILE (THERMA-TRU, 1.531" x .656" PONDEROSA PINE)	WOOD
37	#10 x 1 3/4" LG. PFH WOOD SCREW	STEEL
38	SS. LATCH STILE (THERMA-TRU, WOOD COMPOSITE 1.183" x 1.531")	WOOD COMPOSITE
39	HIGH WATER DAM THRESHOLD	ALUM.
40	SILICONE CAULK	SILICONE
41	#8-10 x 1 1/2" PLASCREW (FOR ITEM #33 & #34)	STEEL
42	SIDELITE TOP & BOTTOM RAIL (THERMA-TRU, 1.531" x .656" PONDEROSA PINE)	WOOD
43	#8 x 2" LG. PFH WOOD SCREW	STEEL

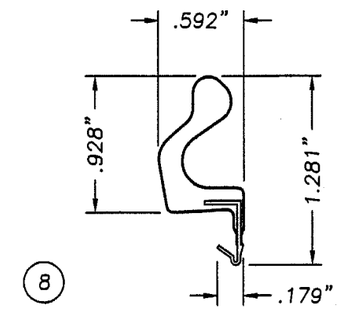

LONG REACH COMPRESSION WEATHERSTRIP
FOAM CELL CORE W/VINYL JACKET

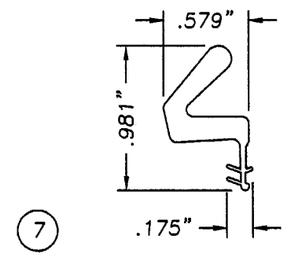

COMPRESSION WEATHERSTRIP
BY THERMA-TRU
FOAM CELL CORE W/VINYL JACKET

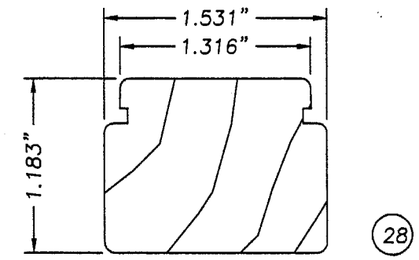

SS. WOOD HINGE SIDE STILE

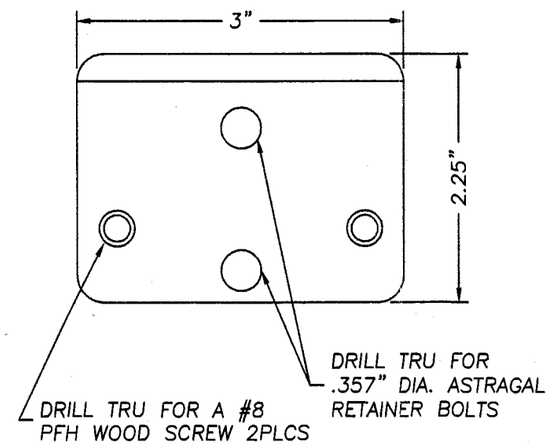

WINDJAMBER II WR68T STRIKE PLATE

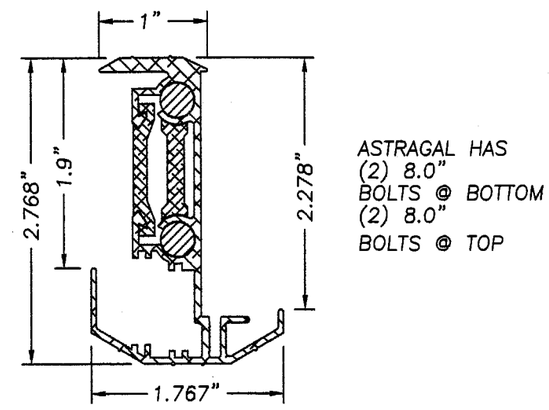

WINDJAMBER II WR68T
ASTRAGAL (ALUMINUM .052" WALL TYP.) 24

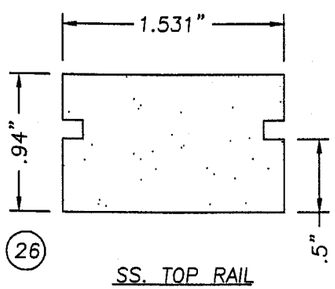

SS. TOP RAIL
WOOD COMPOSITE

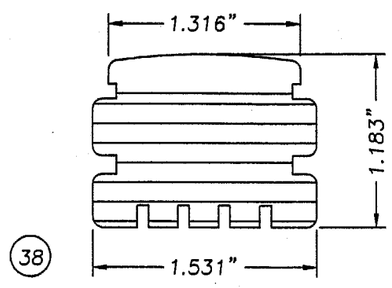

SS. LATCH SIDE STILE COMPOSITE

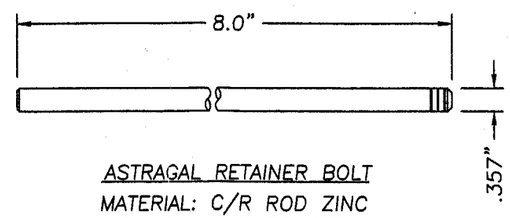

ASTRAGAL RETAINER BOLT
MATERIAL: C/R ROD ZINC
& YELLOW CHROMATE

THERMA-TRU CORPORATION
1687 WOODLANDS DRIVE
MAUMEE, OHIO
PH. (800) 537-8827

PRODUCT: "FIBER CLASSIC"/"SMOOTH STAR" UPTO 105.5" X 6-8 W&W/OUT 14" SL, OUTSWING

PART OR ASSEMBLY: BILL OF MATERIALS & UNIT COMPONENTS

REVISIONS

NO.	DATE		BY
2	5/18/02	CLARIFY PRESSURE TABLE	RW
1	1/31/02	GENERAL REVISION	WN

RW BUILDING CONSULTANTS, INC.
813.684.3831

Approved as complying with the Florida Buiding Code
Date JULY 11, 2002
NOA# 01-1126.01
Miami Dade Product Control Division
By Manuel Perez

DATE: 08/09/01
SCALE: N.T.S.
DWG. BY: TJH
CHK. BY: RW
DRAWING NO.: S-2096
SHEET 8 OF 8