MIAMI-DADE

BUILDING CODE COMPLIANCE OFFICE (BCCO)
PRODUCT CONTROL DIVISION

MIAMI-DADE COUNTY, FLORIDA
METRO-DADE FLAGLER BUILDING
140 WEST FLAGLER STREET, SUITE 1603
MIAMI, FLORIDA 33130-1563
(305) 375-2901 FAX (305) 375-2908

NOTICE OF ACCEPTANCE (NOA)

The Trane Company
1515 Mercer Road
Lexington, KY 40511

SCOPE:

This NOA is being issued under the applicable rules and regulations governing the use of construction materials. The documentation submitted has been reviewed by Miami-Dade County Product Control Division and accepted by the Board of Rules and Appeals (BORA) to be used in Miami Dade County and other areas where allowed by the Authority Having Jurisdiction (AHJ).

This NOA shall not be valid after the expiration date stated below. The Miami-Dade County Product Control Division (In Miami Dade County) and/or the AHJ (in areas other than Miami Dade County) reserve the right to have this product or material tested for quality assurance purposes. If this product or material fails to perform in the accepted manner, the manufacturer will incur the expense of such testing and the AHJ may immediately revoke, modify, or suspend the use of such product or material within their jurisdiction. BORA reserves the right to revoke this acceptance, if it is determined by Miami-Dade County Product Control Division that this product or material fails to meet the requirements of the applicable building code.

This product is approved as described herein, and has been designed to comply with the High Velocity Hurricane Zone of the Florida Building Code.

DESCRIPTION: T-Series Climate Changer Air Handler Impact Wall Panel

APPROVAL DOCUMENT: Drawing No. 1068, titled " T-Series Climate Changer Air Handler Impact Wall Panel ", sheets 1 & 2 of 2, prepared by W. W. Schaefer Engineering & Consulting, P.A., dated June 5, 2003, signed and sealed by Warren W. Schaefer, P.E., bearing the Miami-Dade County Product Control Approval stamp with the Notice of Acceptance number and approval date by the Miami-Dade County Product Control Division.

MISSILE IMPACT RATING: Large and Small Missile Impact

LABELING: Each panel shall bear a permanent label with the manufacturer's name or logo, city, state and the following statement: "Miami-Dade County Product Control Approved", unless otherwise noted herein.

RENEWAL of this NOA shall be considered after a renewal application has been filed and there has been no change in the applicable building code negatively affecting the performance of this product.

TERMINATION of this NOA will occur after the expiration date or if there has been a revision or change in the materials, use, and/or manufacture of the product or process. Misuse of this NOA as an endorsement of any product, for sales, advertising or any other purposes shall automatically terminate this NOA. Failure to comply with any section of this NOA shall be cause for termination and removal of NOA.

ADVERTISEMENT: The NOA number preceded by the words Miami-Dade County, Florida, and followed by the expiration date may be displayed in advertising literature. If any portion of the NOA is displayed, then it shall be done in its entirety.

INSPECTION: A copy of this entire NOA shall be provided to the user by the manufacturer or its distributors and shall be available for inspection at the job site at the request of the Building Official.

This NOA consists of this page 1 as well as approval document mentioned above.
The submitted documentation was reviewed by **Helmy A. Makar, P.E.**

PRODUCT CONTROL ACCEPTED

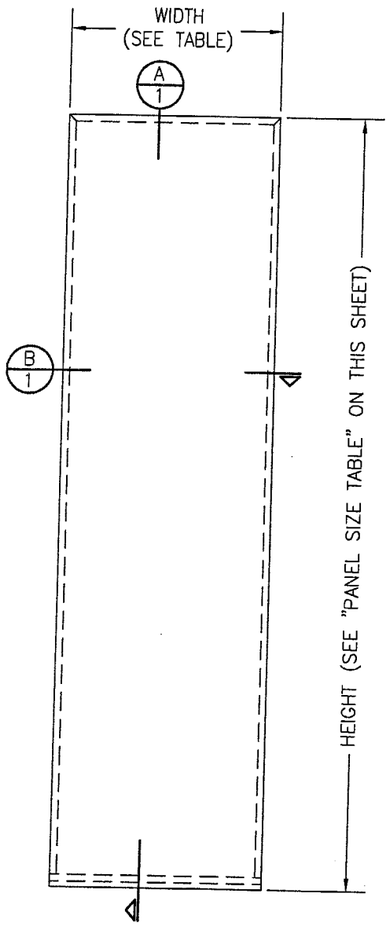

FRONT VIEW OF SINGLE PANEL

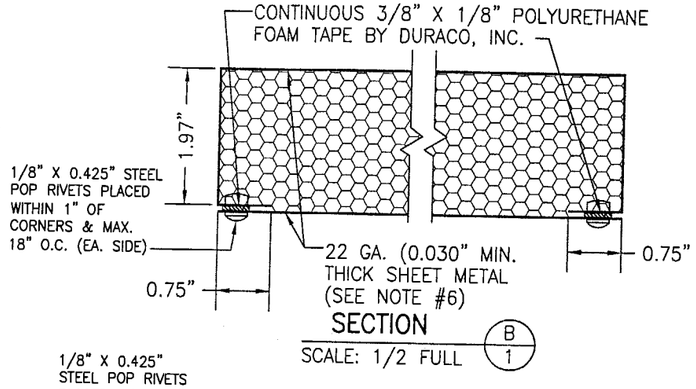

SECTION

SCALE: 1/2 FULL

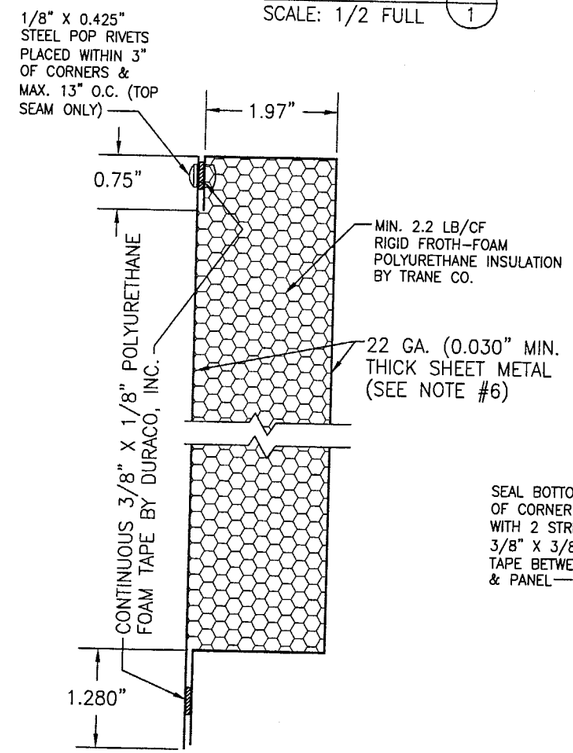

SECTION

SCALE: 1/2 FULL

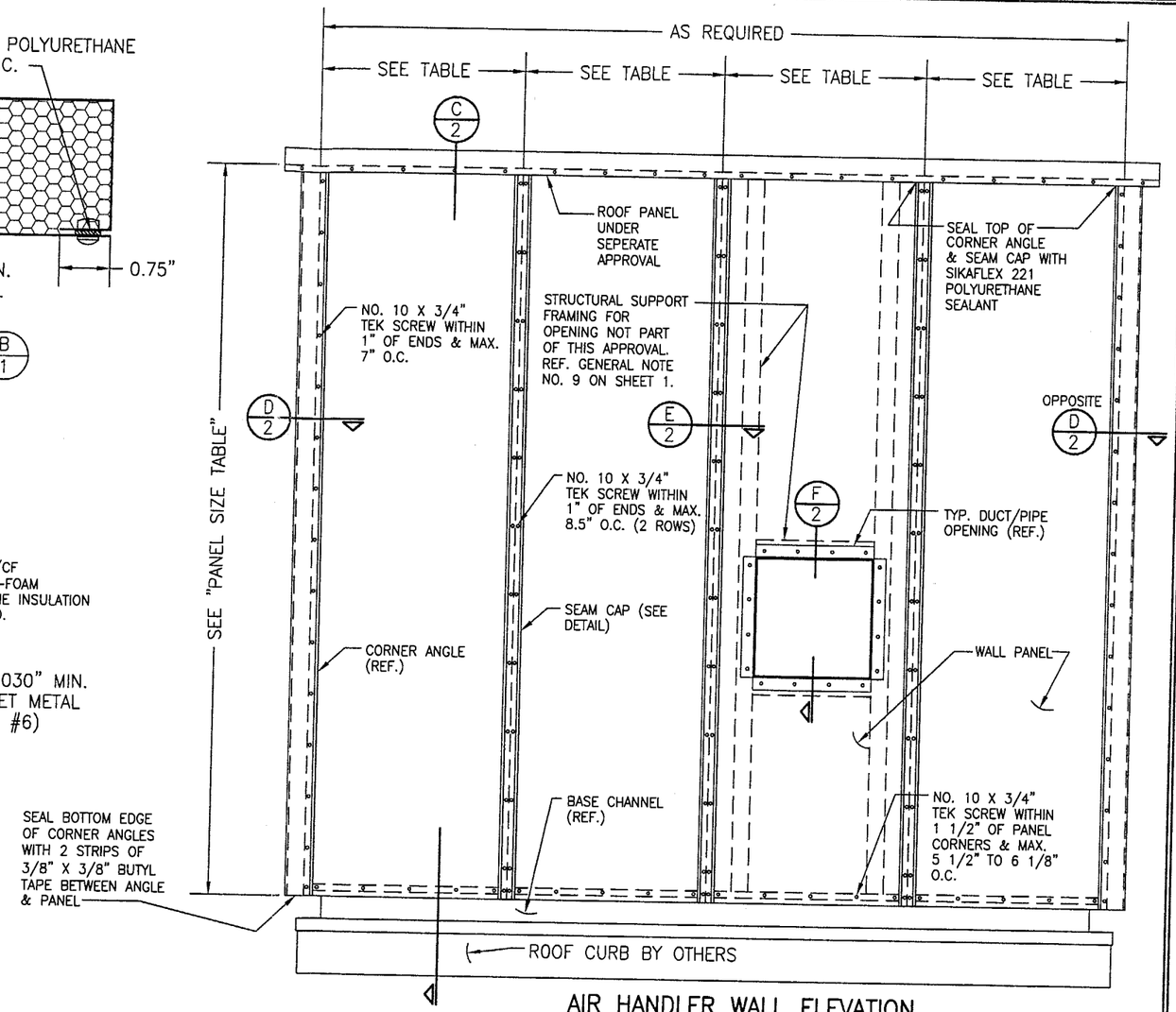

AIR HANDLER WALL ELEVATION

PANEL SIZE TABLE	
MAX. WIDTH (IN.)	MAX. HEIGHT (IN.)
59.0	34.00
49.5	48.50
40.0	54.75
36.0	62.00
31.0	74.00
24.0	99.00
19.0	111.50

ALLOWABLE DESIGN LOAD	
POSITIVE	NEGATIVE
65 PSF	65 PSF

GENERAL NOTES

1. THIS AIR HANDLER WALL PANEL SYSTEM HAS BEEN TESTED AND ANALYZED FOR DESIGN PRESSURES NOT TO EXCEED THOSE SHOWN IN THE "ALLOWABLE DESIGN LOADS" TABLE FOR THE SIZES SHOWN IN THE PANEL SIZE TABLE.
2. THE ROOF CURB AND SUPPORT OF THE ROOF CURB TO THE STRUCTURE SHALL BE BY OTHERS AND AS REQUIRED TO PROPERLY SUPPORT ALL WIND AND UNIT LOADS TRANSFERED TO THE STRUCTURE (MIN. ALLOWABLE ROOF CURB MATERIAL = 14 GA. 33 KSI STEEL).
3. ALL HARDWARE & FASTENERS SHALL BE IN ACCORDANCE WITH THESE DRAWINGS & MAY NOT VARY UNLESS SPECIFICALLY MENTIONED ON THE DRAWINGS.
4. THE DETAILS & SPECIFICATIONS SHOWN HEREIN REPRESENT THE PRODUCTS TESTED & PROPOSED FOR WATER, AIR, IMPACT, CYCLIC & UNIFORM STATIC AIR PRESSURE TESTING IN CONFORMANCE WITH FLORIDA STATE CODE PROTOCOLS TAS 201, 202 & 203 FOR LARGE MISSILE IMPACT PANELS.
5. NUMBER OF PANELS STACKED HORIZONTALLY SHALL BE AS REQUIRED BY THE AIR HANDLING UNIT SIZE WITH PANEL HEIGHT AND WIDTH LIMITED AS SHOWN IN THE "PANEL SIZE TABLE".
6. ALL PANEL SKINS SHALL BE MIN. 22 GAGE (MIN. 0.030" THICK) 50 KSI SHEET STEEL THAT CONFORMS TO ASTM A653, TYPE "B" WITH G60-U GALVANIZED FINISH AND COATED CHROMATED, WATER BASED ORGANIC PRIMER (DRY FILM THICKNESS = 0.03 +/-0.006 MILLS), ALL OTHER METAL SHALL BE AS SPECIFIED IN THE DETAILS AND BE COATED THE SAME AS THE PANEL SKIN.
7. OVERALL AIR HANDLING UNIT SHALL BE DESIGNED BY THE TRANE COMPANY AS REQUIRED TO SUPPORT ALL DEAD LOADS, LIVE LOADS AND WIND LOADS WITH THE WALL PANELS BEING IN ACCORDANCE WITH THESE DRAWINGS.
8. MECHANICAL EQUIPMENT IS NOT PART OF THIS DADE COUNTY NOTICE OF ACCEPTANCE AND SHALL BE DESIGNED AND INSTALLED IN ACCORDANCE WITH ALL APPLICABLE CODES.
9. STRUCTURAL SUPPORT FRAMING SHOWN IN SECTIONS (INCLUDING RACEWAY AND BASE CHANNEL) IS NOT PART OF THIS APPROVAL AND SHALL BE DESIGNED & CERTIFIED SPECIFICALLY FOR EACH CASE & REVIEWED BY THE STRUCTURAL PLANS EXAMINER OF THE CORRESPONDING BUILDING DEPARTMENT. STRUCTURAL FRAMING SHALL SUPPORT ALL SHEAR WALL & UPLIFT EFFECTS FROM THE ASSEMBLY IN ADDITION TO ALL LOADS DIRECTLY TRANSFERED FROM THE PANELS AND EQUIPMENT. STRUCTURAL FRAMING SHALL ALSO BE DESIGNED TO PROPERLY TRANSFER ALL REACTION LOADS TO THE STRUCTURE SUPPORTING THE ASSEMBLY.

Approved as complying with the Florida Buiding Code
Date 08/21/2003
NOA# 01-1210.04
Miami Dade Product Control Division
By [signature]

DRAWN BY: W.W.S.	CHECKED BY: W.W.S.
PLOT: 1=1	DATE: 06/05/03

NO.	REVISION DESCRIPTION	BY	DATE

DRAWING TITLE
T-SERIES CLIMATE CHANGER AIR HANDLER IMPACT WALL PANEL

MANUFACTURER
THE TRANE COMPANY
1515 MERCER ROAD
LEXINGTON, KY 40511
859-259-2500

CONSULTANTS
W. W. SCHAEFER ENGINEERING & CONSULTING, P.A.
600 SANDTREE DRIVE, SUITE 203B
PALM BEACH GARDENS, FL 33403
PHONE: 561-775-4902 FAX: 561-775-4903

CERTIFICATION
JUL 21 2003
WARREN W. SCHAEFER, P.E.
P.E. NO. 44135

DRAWING NO. 1068
REV.

SHEET NO. 1 OF 2

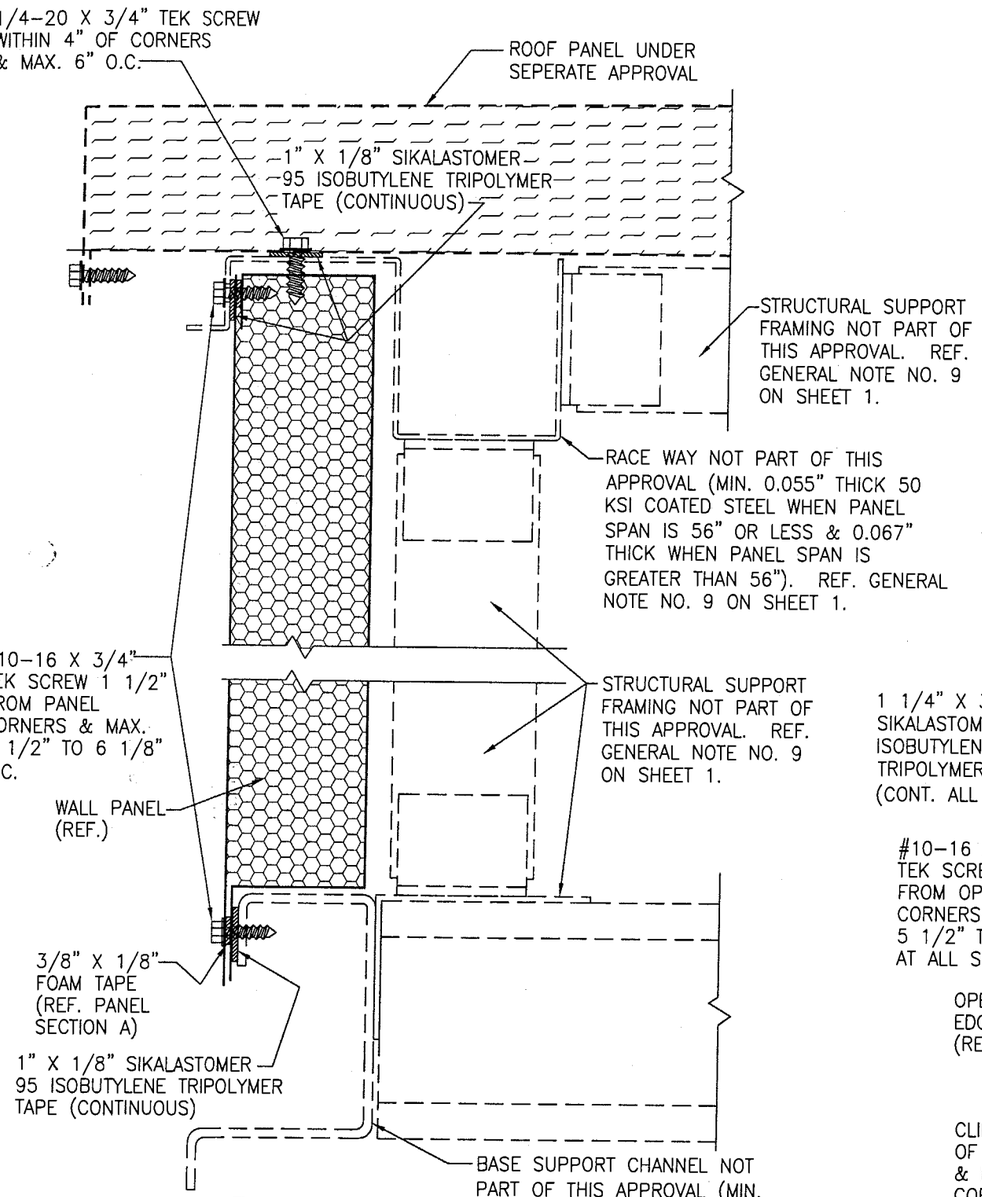

SECTION C/2
SCALE: 1/2 FULL

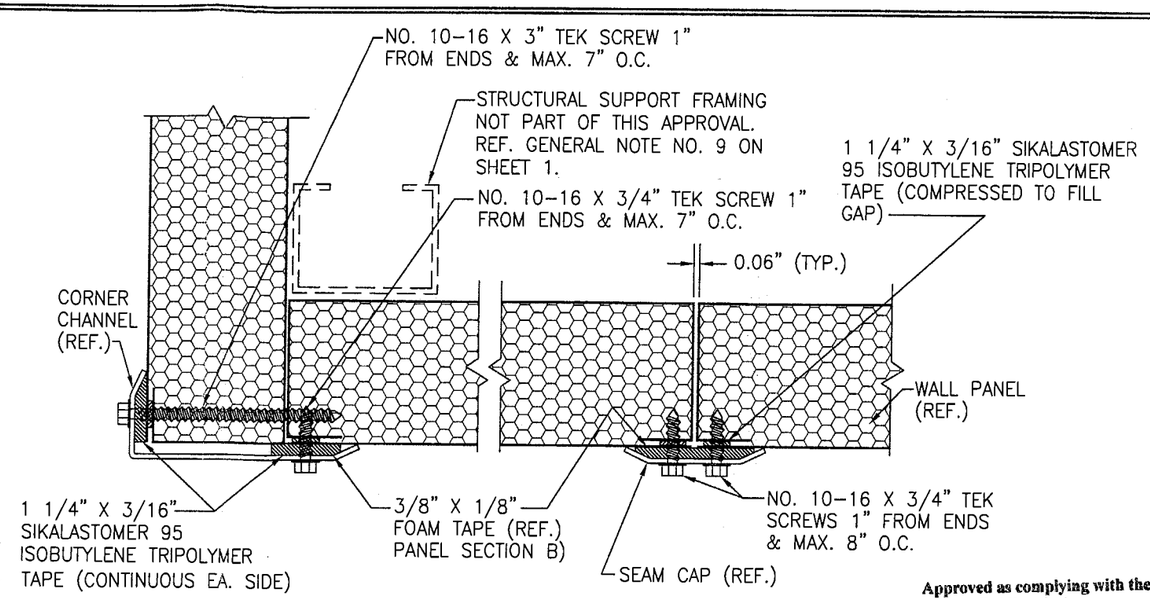

SECTION D/2
SCALE: 1/2 FULL

SECTION E/2
SCALE: 1/2 FULL

Approved as complying with the Florida Buiding Code
Date 08/21/2003
NOA# 01-1210.04
Miami Dade Product Control Division
By

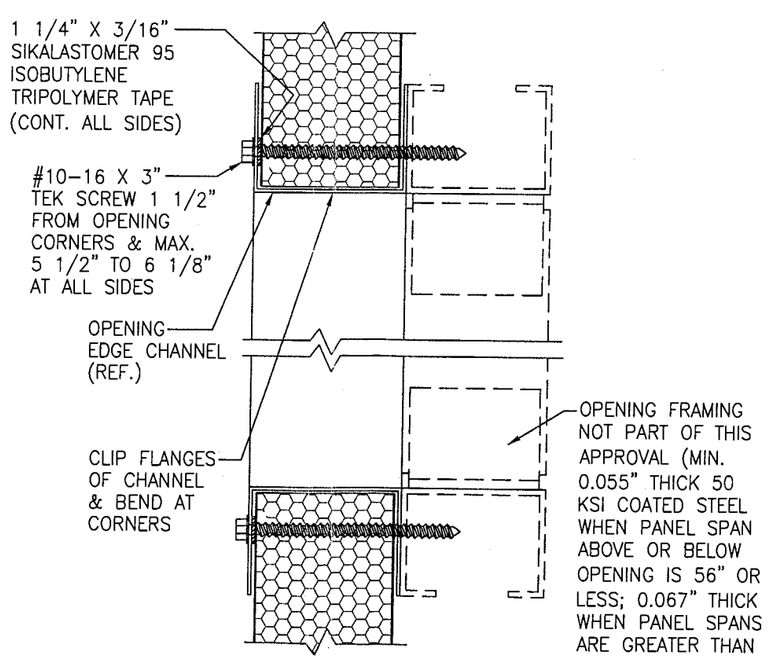

SECTION F/2
SCALE: 1/2 FULL

NOTE: ALL DUCTS/PIPES PENETRATING THE PANELS MUST BE FLANGED AND SEALED AGAINST WATER INFILTRATION.

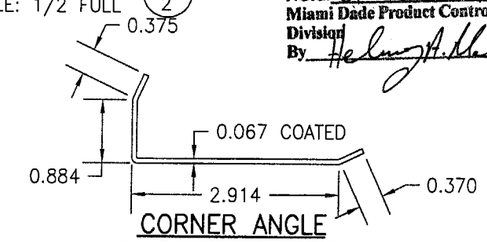

CORNER ANGLE
MIN. 50 KSI GALV. STEEL

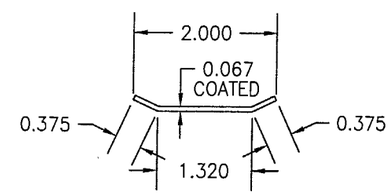

SEAM CAP
MIN. 50 KSI GALV. STEEL

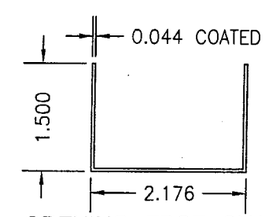

OPENING EDGE CHANNEL
MIN. 50 KSI GALV. STEEL

DRAWN BY: W.W.S.	CHECKED BY: W.W.S.
PLOT: 1=1	DATE: 06/05/03

NO.	REVISION DESCRIPTION	BY	DATE

DRAWING TITLE: T-SERIES CLIMATE CHANGER AIR HANDLER IMPACT WALL PANEL

MANUFACTURER: THE TRANE COMPANY, 1515 MERCER ROAD, LEXINGTON, KY 40511, 859-259-2500

CONSULTANTS: W. W. SCHAEFER ENGINEERING & CONSULTING, P.A., 600 SANDTREE DRIVE, SUITE 203B, PALM BEACH GARDENS, FL 33403, PHONE: 561-775-4902 FAX: 561-775-4903

CERTIFICATION: JUL 21 2003
WARREN W. SCHAEFER, P.E.
P.E. NO. 44135

DRAWING NO. 1068 REV.

SHEET NO. 2 OF 2