MIAMI-DADE

MIAMI-DADE COUNTY, FLORIDA
METRO-DADE FLAGLER BUILDING

BUILDING CODE COMPLIANCE OFFICE
METRO-DADE FLAGLER BUILDING
140 WEST FLAGLER STREET, SUITE 1603
MIAMI, FLORIDA 33130-1563
(305) 375-2901 FAX (305) 375-2908

CONTRACTOR LICENSING SECTION
(305) 375-2527 FAX (305) 375-2558

CONTRACTOR ENFORCEMENT DIVISION
(305) 375-2966 FAX (305) 375-2908

PRODUCT CONTROL DIVISION
(305) 375-2902 FAX (305) 372-6339

PRODUCT CONTROL NOTICE OF ACCEPTANCE

Binnings Pan American
3000 N.W. 125 Street
Miami ,FL 33167

Your application for Notice of Acceptance (NOA) of:
PA-8 (1"X) Aluminum Mullions w/steel Reinforcement
under Chapter 8 of the Code of Miami-Dade County governing the use of Alternate Materials and Types of Construction, and completely described herein, has been recommended for acceptance by the Miami-Dade County Building Code Compliance Office (BCCO) under the conditions specified herein.

This NOA shall not be valid after the expiration date stated below. BCCO reserves the right to secure this product or material at any time from a jobsite or manufacturer's plant for quality control testing. If this product or material fails to perform in the approved manner, BCCO may revoke, modify, or suspend the use of such product or material immediately. BCCO reserves the right to revoke this approval, if it is determined by BCCO that this product or material fails to meet the requirements of the South Florida Building Code.

The expense of such testing will be incurred by the manufacturer.

ACCEPTANCE NO.: 01-1214.04
EXPIRES: 02/01/2007

Raul Rodriguez
Chief Product Control Division

THIS IS THE COVERSHEET, SEE ADDITIONAL PAGES FOR SPECIFIC AND GENERAL CONDITIONS
BUILDING CODE & PRODUCT REVIEW COMMITTEE

This application for Product Approval has been reviewed by the BCCO and approved by the Building Code and Product Review Committee to be used in Miami-Dade County, Florida under the conditions set forth above.

Francisco J. Quintana, R.A.
Director
Miami-Dade County
Building Code Compliance Office

APPROVED: 02/07/2002

NOTICE OF ACCEPTANCE: SPECIFIC CONDITIONS

1. SCOPE

1.1 This **renews** Notice of Acceptance (NOA) No. **00-0501.16**, which was issued on June 29, 2000. It renews the approval of a structural clipped mullion system, as described in Section 2 of this NOA, designed to comply with the South Florida Building Code (SFBC), 1994 Edition for Miami-Dade County, for the locations where the pressure requirements, as determined by SFBC Chapter 23, do not exceed the Design Pressure Rating values indicated in the approved drawings.

2. PRODUCT DESCRIPTION

2.1 The **PA-8 (1" x) Aluminum Mullion with Steel Reinforcement** and its components shall be constructed in strict compliance with the following document: Drawing No **PA2-DET.DXF**, Sheets 1 through 5 of 5, titled "Mullion," prepared by manufacturer, dated 01/10/96, revised on 12/10/01, signed and sealed by William M. Myers., P.E., bearing the Miami-Dade County Product Control renewal stamp with the NOA number and expiration date by the Miami-Dade County Product Control Division. This document shall hereinafter be referred to as the approved drawings.

3. LIMITATIONS

3.1 This approval applies only to structural mullions to be installed vertically or horizontally, used with windows with a current Notice of Acceptance and installed as shown in approved drawings

4. INSTALLATION

4.1 The structural clipped mullion system and its components shall be installed in strict compliance with the approved drawings.

4.2 Hurricane protection system (shutters): the installation of this unit **will require** a hurricane protection system.

5. LABELING

5.1 Each unit shall bear a permanent label with the manufacturer's name or logo, city, state and following statement: "Miami-Dade County Product Control Approved".

6. BUILDING PERMIT REQUIREMENTS

6.1 Application for building permit shall be accompanied by copies of the following:

- **6.1.1** This Notice of Acceptance
- **6.1.2** Duplicate copies of the approved drawings, as identified in Section 2 of this Notice of Acceptance, clearly marked to show the components selected for the proposed installation.
- **6.1.3** Any other documents required by the Building Official or the South Florida Building Code (SFBC) in order to properly evaluate the installation of this system.

Raul Rodriguez, Chief
Product Control Division

Binnings Pan American

ACCEPTANCE No.: **01-1214.04**

APPROVED: **February 7, 2002**

EXPIRES: **February 1, 2007**

NOTICE OF ACCEPTANCE: STANDARD CONDITIONS

1. Renewal of this Acceptance (approval) shall be considered after a renewal application has been filed and the original submitted documentation, including test supporting data, engineering documents, are no older than eight (8) years.

2. Any and all approved products shall be permanently labeled with the manufacturer's name, city, state, and the following statement: "Miami-Dade County Product Control Approved", or as specifically stated in the specific conditions of this Acceptance.

3. Renewals of Acceptance will not be considered if:
   a) There has been a change in the South Florida Building Code affecting the evaluation of this product and the product is not in compliance with the code changes;
   b) The product is no longer the same product (identical) as the one originally approved;
   c) If the Acceptance holder has not complied with all the requirements of this acceptance, including the correct installation of the product;
   d) The engineer who originally prepared, signed and sealed the required documentation initially submitted is no longer practicing the engineering profession.

4. Any revision or change in the materials, use, and/or manufacture of the product or process shall automatically be cause for termination of this Acceptance, unless prior written approval has been requested (through the filing of a revision application with appropriate fee) and granted by this office.

5. Any of the following shall also be grounds for removal of this Acceptance:
   a) Unsatisfactory performance of this product or process.
   b)Misuse of this Acceptance as an endorsement of any product, for sales, advertising or any other purpose.

6. The Notice of Acceptance number preceded by the words Miami-Dade County, Florida, and followed by the expiration date may be displayed in advertising literature. If any portion of the Notice of Acceptance is displayed, then it shall be done in its entirety.

7. A copy of this Acceptance as well as approved drawings and other documents, where it applies, shall be provided to the user by the manufacturer or its distributors and shall be available for inspection at the job site at all time. The engineer need not reseal the copies.

8. Failure to comply with any section of this Acceptance shall be cause for termination and removal of Acceptance.

9. This Notice of Acceptance consists of pages 1, 2 and this last page 3.

END OF THIS ACCEPTANCE

Raul Rodriguez, Chief
Product Control Division

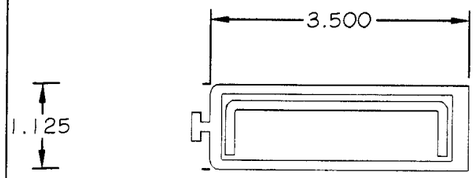

1" X 3 1/2" MULLION

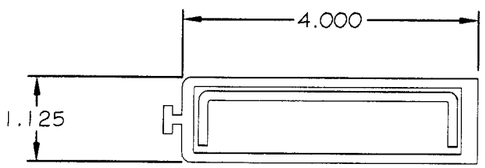

1" X 4" MULLION

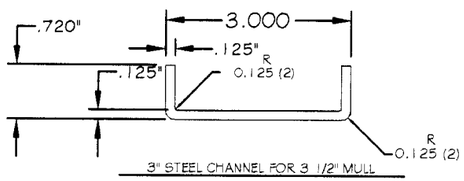

3" STEEL CHANNEL FOR 3 1/2" MULL

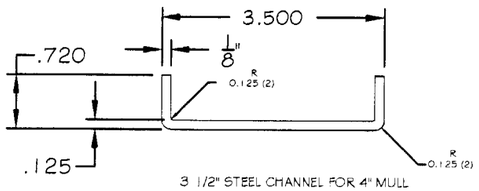

3 1/2" STEEL CHANNEL FOR 4" MULL

MULLION DETAILS

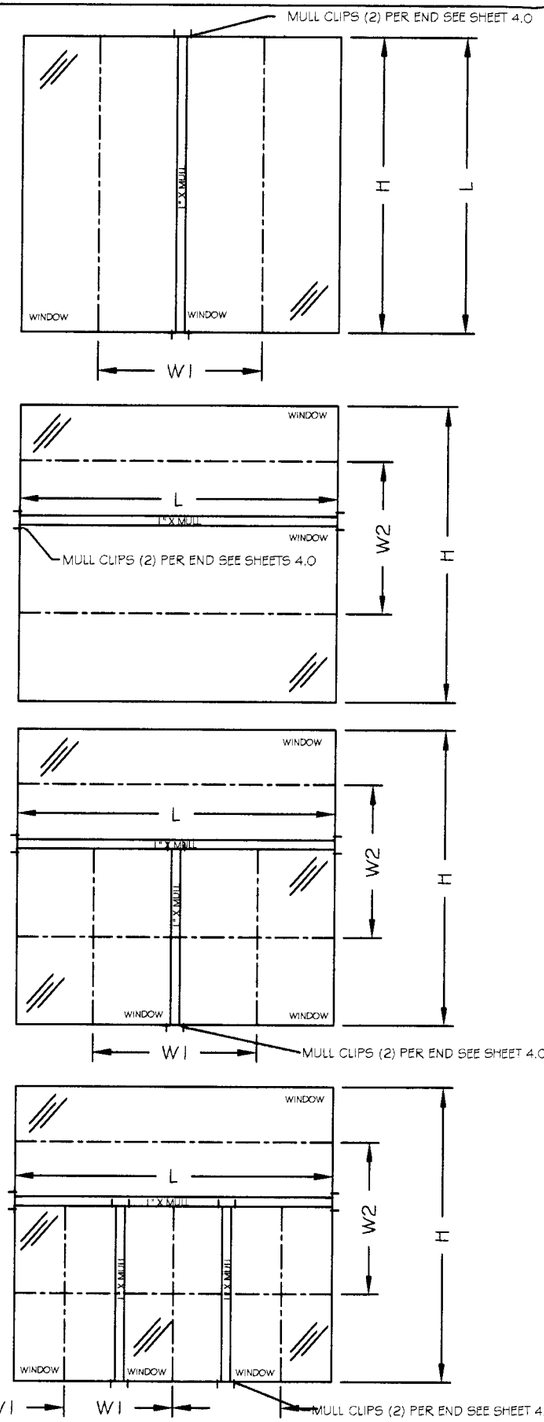

LOAD APPLICATIONS

W1 - APPLIES TO VERTICAL APPLICATIONS
W2- APPLIES TO HORIZONTAL APPLICATIONS

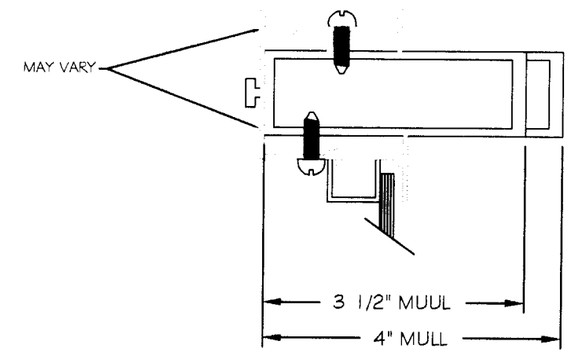

General Notes:

1. Mullion system has been designed in accordance with the South Florida Building Code. Wind speed considered is 110 mph, importance factor is 1.05, exposure factor is "C" and the mean roof height of the building is equal to or less than 60 feet.
2. Mullions installed in Dade County must have a hurricane protective system, such as storm panels.
3. All aluminum extrusions shall be 6063-T5 unless noted otherwise. Fa=9.5 4/3=12.664
4. All steel reinforcement to meet ASTM A-36 Fa 22.0 4/3=29.3
5. Design loads on sheet 2.1 apply to both positive and negative loads.
6. The design loads indicated in the performance chart cannot exceed the design loads of the individual windows or their attendant comparative analysis charts.
7. Mulls must be installed in the structure with clips, as shown on sheet 3.
8. Fastening spacing of the window products to the mull must be as per the product approval for the window. Fastening of the mulls must use either a #10 x bolt w/nut or #10 x Self-Tapping SMS. The minimum length for the #10 bolt is 1 9/16". The minimum length for the #10 Self-Tapping SMS is 5/8".
9. The mull system is used for the following Metro Dade products:
   a. 94-0301.03 Fixed Window: Specialty
   b. 94-0307.01 Fixed Window: Specialty
   c. 94-0808.04 Fixed Window: Specialty
   d. 94-0808.05 Fixed Window: Specialty
   e. 93-0623.01 Horizontal Rolling Window
   f. 94-0623.02 Horizontal Rolling Window
   g. 94-0202.02 Awning Window
   h. 94-0202.01 Awning Window
   i. 93-1119.11 Dual Frame Single Hung
   j. 94-0808.02 Single Hung Window
   k. 94-0808.03 Single Hung Window

PRODUCT RENEWED

ACCEPTANCE No. 01-1214.04

EXPIRATION DATE February 1, 2007

By

PRODUCT CONTROL DIVISION
BUILDING CODE COMPLIANCE OFFICE

ROBT. E. FISHER
WM. M. MEYERS, P.E.
Consulting Engineers
9301 N.E. 6th Ave. C-300
Miami Shores, FL 33138
(305) 758-3117 557-4006 Fax 362-6252

FLA. 18755
STRUCTURAL

Date: 12/11/01

INSTALLATION	---	MULLION	ALL	---	1 OF 5

GENERAL

PA-1.0	PA2-DET.DXF	01/10/96

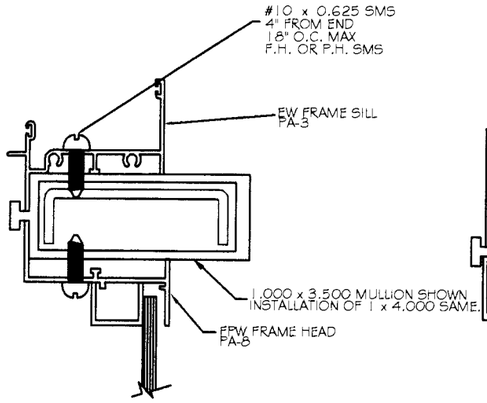

TYPICAL INSTALLATION EW SILL TO FPW HEAD

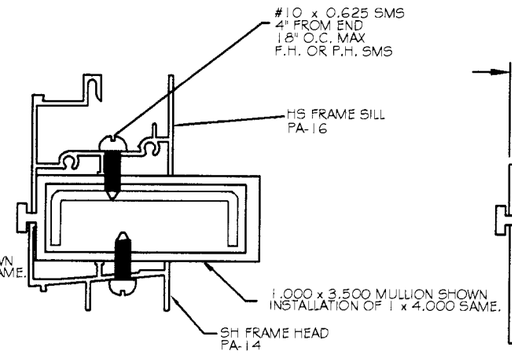

TYPICAL INSTALLATION HS SILL TO SH HEAD

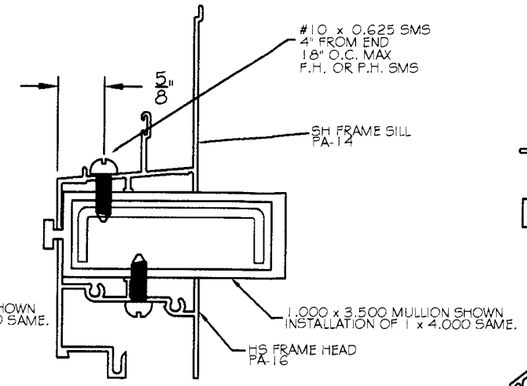

TYPICAL INSTALLATION SH SILL TO AWN HEAD

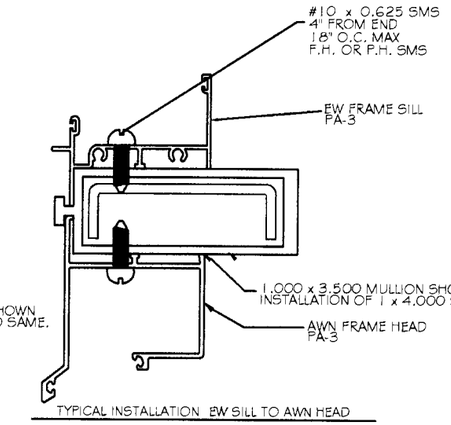

TYPICAL INSTALLATION EW SILL TO AWN HEAD

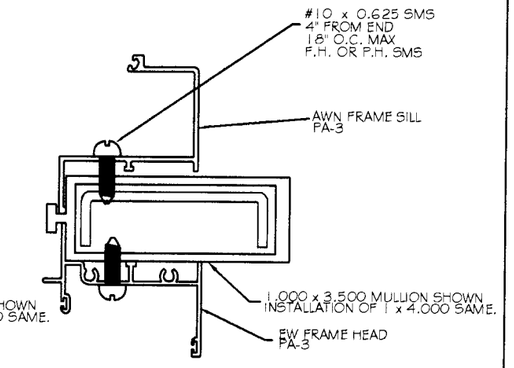

TYPICAL INSTALLATION HS SILL TO EW HEAD

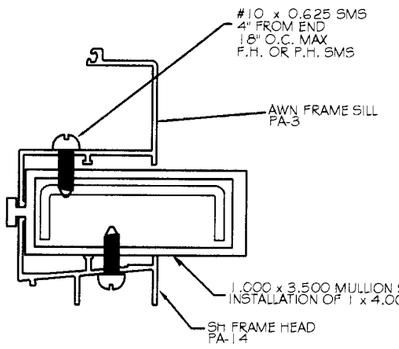

TYPICAL INSTALLATION AWN SILL TO SH HEAD

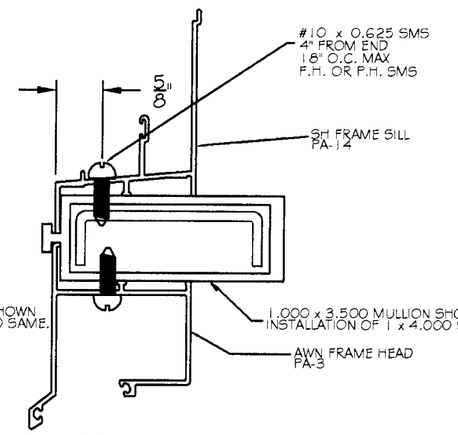

TYPICAL INSTALLATION SH SILL TO AWN HEAD

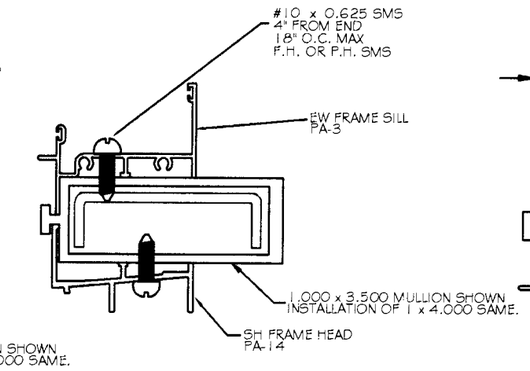

TYPICAL INSTALLATION EW SILL TO FPW HEAD

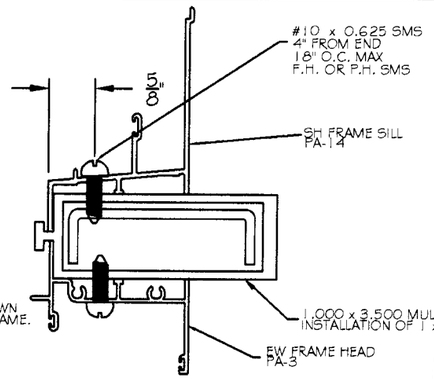

TYPICAL INSTALLATION SH SILL TO EW HEAD

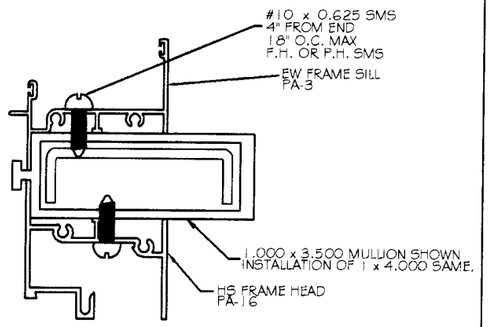

TYPICAL INSTALLATION EW SILL TO HS HEAD

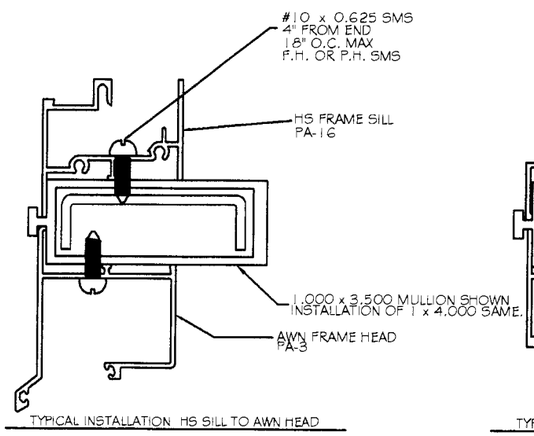

TYPICAL INSTALLATION HS SILL TO AWN HEAD

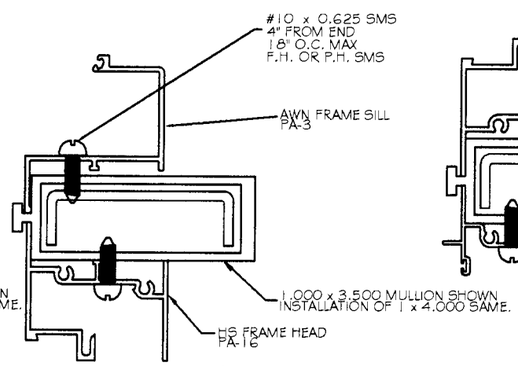

TYPICAL INSTALLATION AWN SILL TO HS HEAD

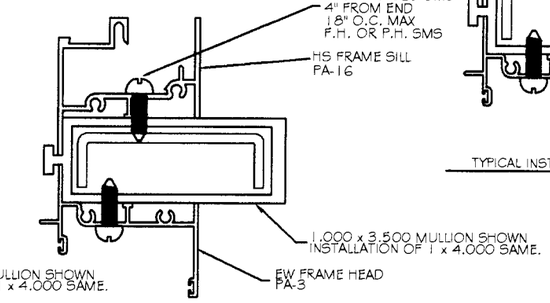

TYPICAL INSTALLATION HS SILL TO EW HEAD

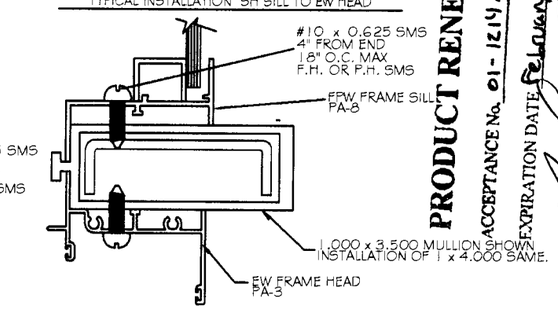

TYPICAL INSTALLATION FPW SILL TO EW HEAD

PRODUCT RENEWED
ACCEPTANCE No. 01-1214.04
EXPIRATION DATE February 1, 2007
By
PRODUCT CONTROL DIVISION
BUILDING CODE COMPLIANCE OFFICE

ROBT. E. FISHER
WM. M. MEYERS, P.E.
Consulting Engineers
9301 N.E. 6th Ave. C-300
Miami Shores, FL 33138
(305) 758-3117 557-4006 Fax 362-6282

FLA. 18755
STRUCTURAL
Date: 12/11/01

INSTALLATION	---	MULLION	ALL	---	2 OF 5

TYPICAL INSTALLATION DETAILS

PA-1.2-2	PA2-DET.DXF	01/10/96

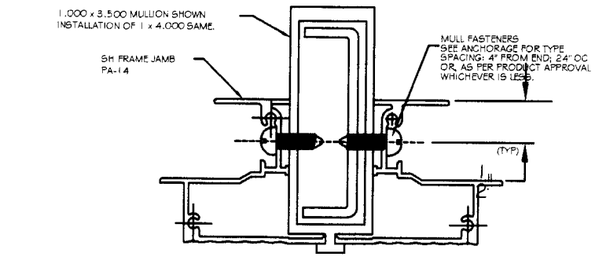

TYPICAL INSTALLATION SH TO SH

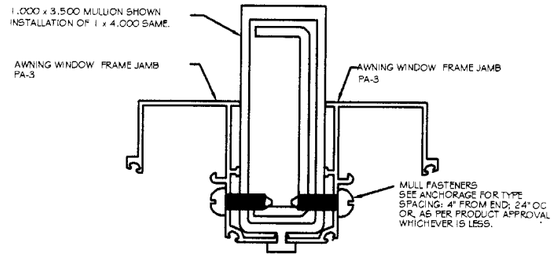

TYPICAL INSTALLATION AWN TO AWN

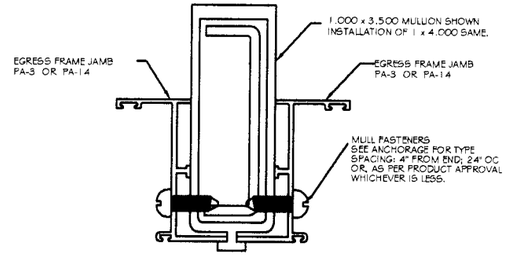

TYPICAL INSTALLATION EW TO EW

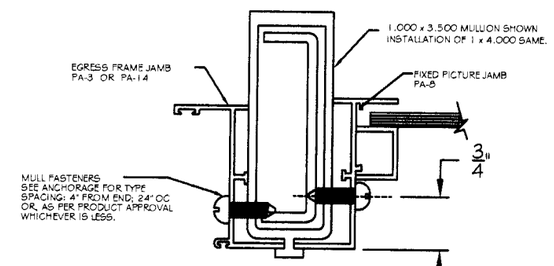

TYPICAL INSTALLATION EW TO FPW

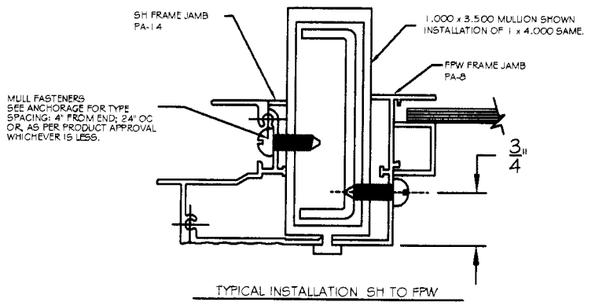

TYPICAL INSTALLATION SH TO FPW

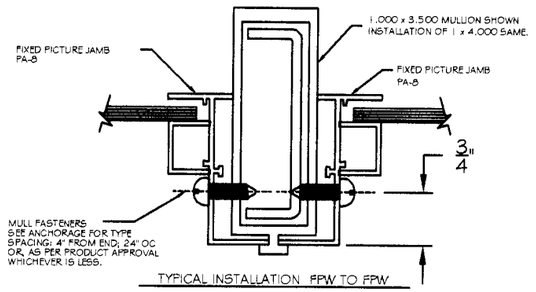

TYPICAL INSTALLATION FPW TO FPW

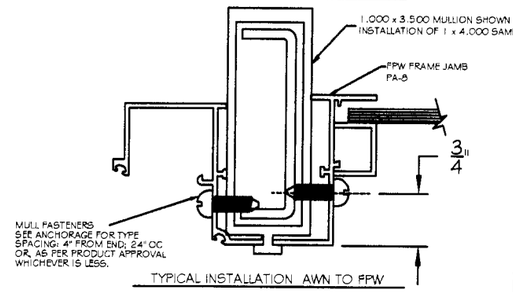

TYPICAL INSTALLATION AWN TO FPW

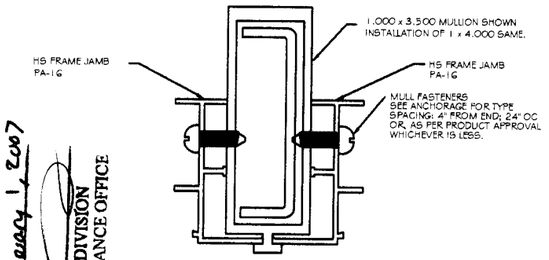

TYPICAL INSTALLATION HS TO HS

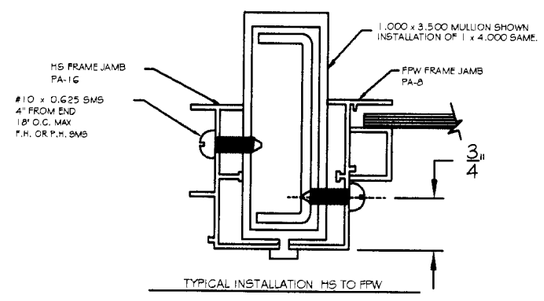

TYPICAL INSTALLATION HS TO FPW

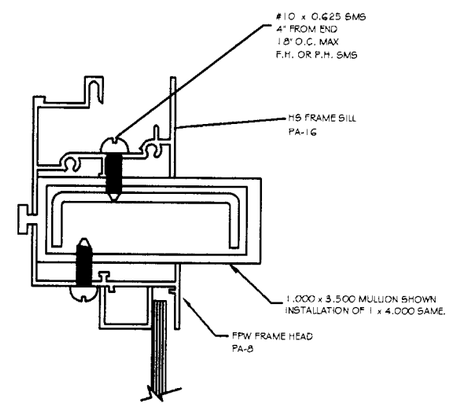

TYPICAL INSTALLATION HS SILL TO FPW HEAD

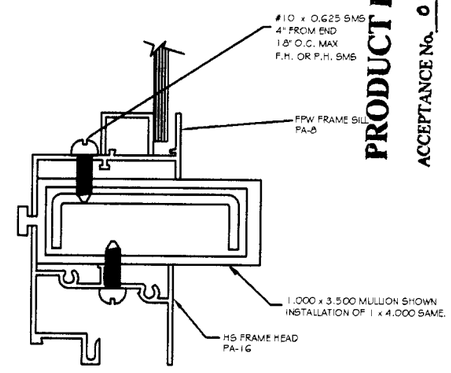

TYPICAL INSTALLATION FPW SILL TO HS HEAD

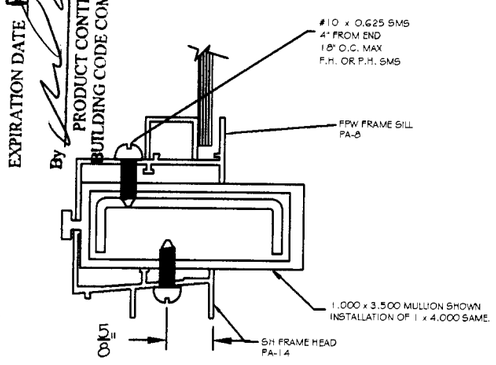

TYPICAL INSTALLATION FPW SILL TO SH HEAD

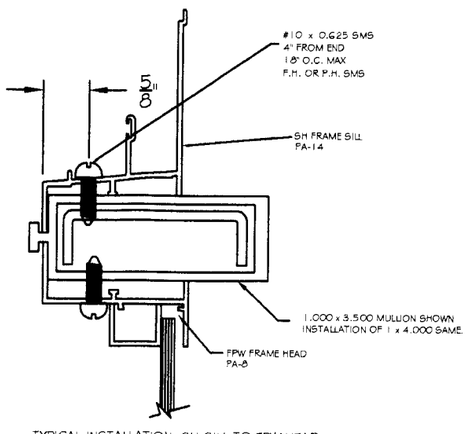

TYPICAL INSTALLATION SH SILL TO FPW HEAD

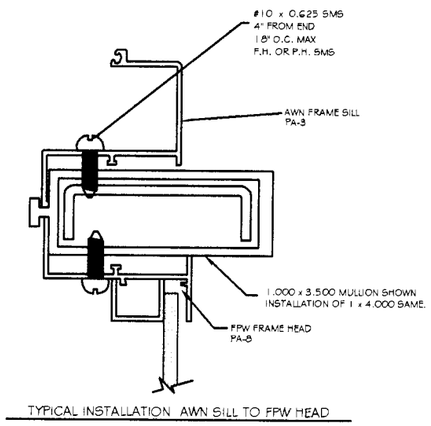

TYPICAL INSTALLATION AWN SILL TO FPW HEAD

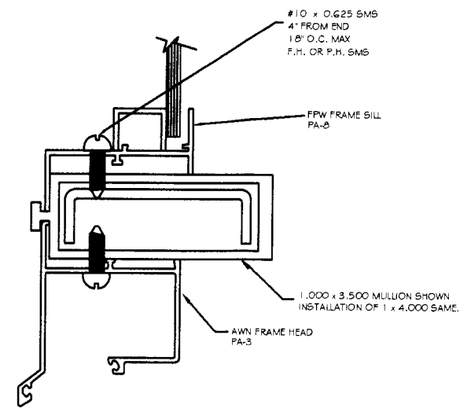

TYPICAL INSTALLATION FPW SILL TO AWN HEAD

PRODUCT RENEWED

ACCEPTANCE No. 01-1214.04

EXPIRATION DATE February 1, 2007

By

PRODUCT CONTROL DIVISION
BUILDING CODE COMPLIANCE OFFICE

ROBT. E. FISHER
WM. M. MEYERS, P.E.
Consulting Engineers
9301 N.E. 6th Ave. C-300
Miami Shores, FL 33138
(305) 758-3117 557-4006 Fax 362-6282

FLA. 18755
STRUCTURAL
Date: 12/11/01

INSTALLATION	---	MULLION	ALL	---	3 OF 5

TYPICAL INSTALLATION DETAILS

PA-1.2-1	PA2-DET.DXF	01/10/96

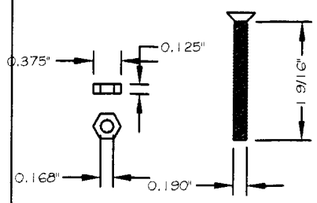

MACHINE SCREW W/ BOLT
PHILLIPS FLAT HEAD
P/N: 4801802
P/N: 4801032

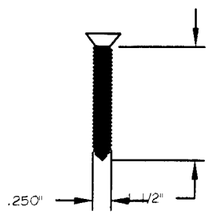

#14 X 1 1/2"
PHILLIPS FLAT HEAD SMS

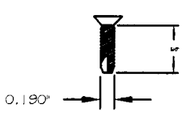

SELF TAPPING
PHILLIPS FLAT HEAD
P/N: 4801800

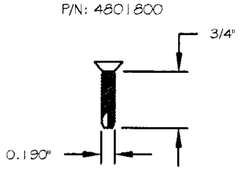

SELF TAPPING
PHILLIPS FLAT HEAD
P/N: 4807801

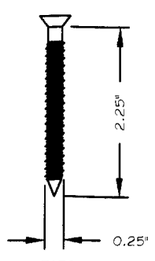

1/4" TAPCON
PHILLIPS FLAT HEAD
P/N: 4801812

FASTENERS

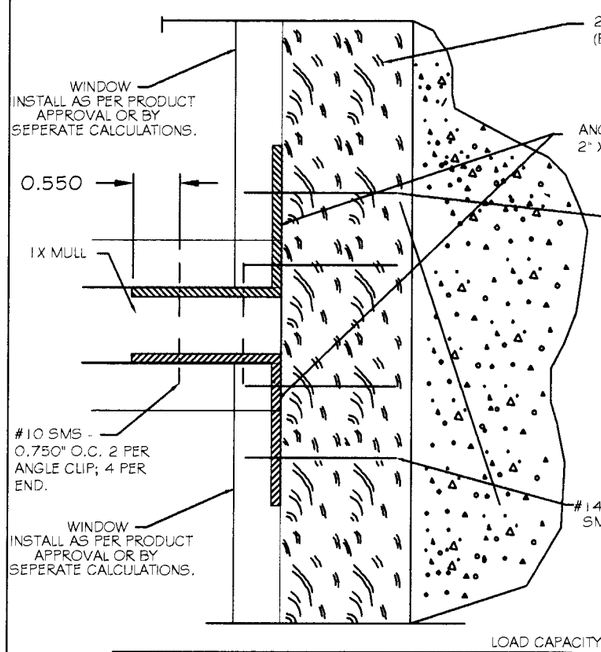

CLIP INSTALLATION FOR 2X WOOD BUCK

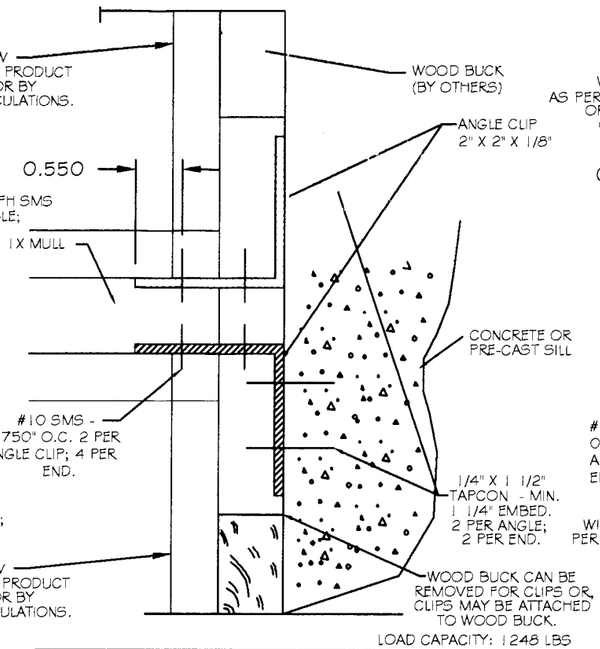

CLIP INSTALLATION FOR MASONRY

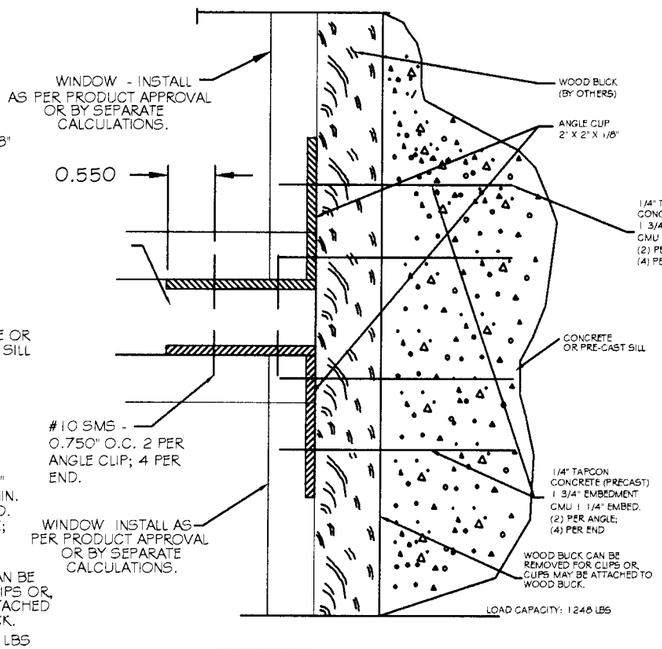

CLIP INSTALLATION FOR 1X WOOD BUCK
OR ANYTHING LESS THAN 2X

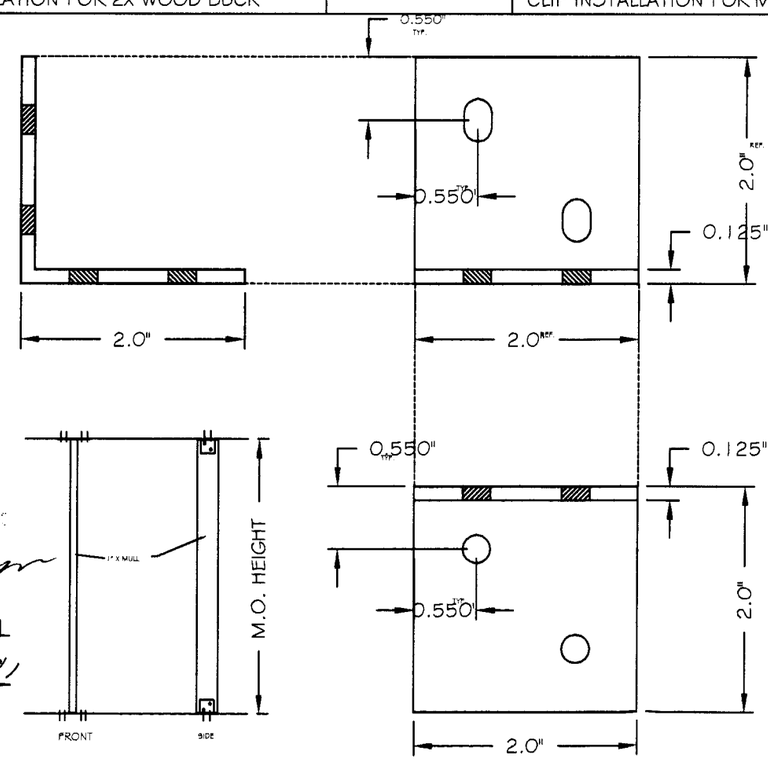

CLIP FABRICATION

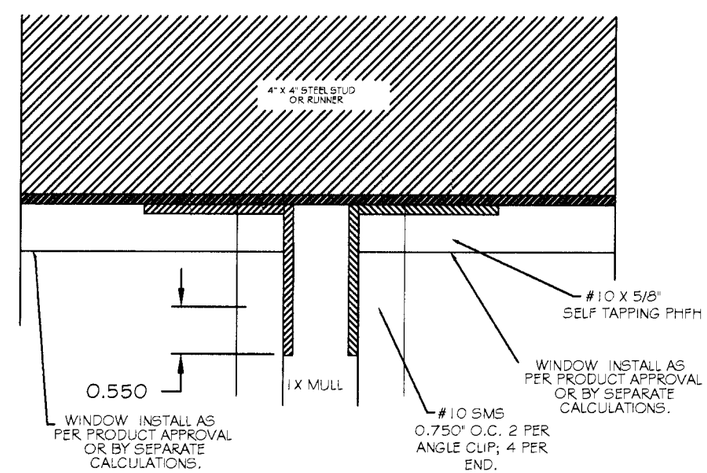

ROBT. E. FISHER
WM. M. MEYERS, P.E.
Consulting Engineers
9301 N.E. 6th Ave. C-30
Miami Shores, FL 33138
(305) 758-3117 557-4006 Fax 362-628

FLA. 18755
STRUCTURAL
Date: 12/11/01

PRODUCT RENEWED
ACCEPTANCE No. 01-1214.04
EXPIRATION DATE February 1, 2007
By
PRODUCT CONTROL DIVISION
BUILDING CODE COMPLIANCE OFFICE

INSTALLATION	---	MULLION	ALL	---	4 OF 5

ANCHORING DETAILS

PA-3.0	PA2-DET.DXF	01/10/96

1 X 3.5 MULL
MAXIMUM DESIGN PRESSURES +/-

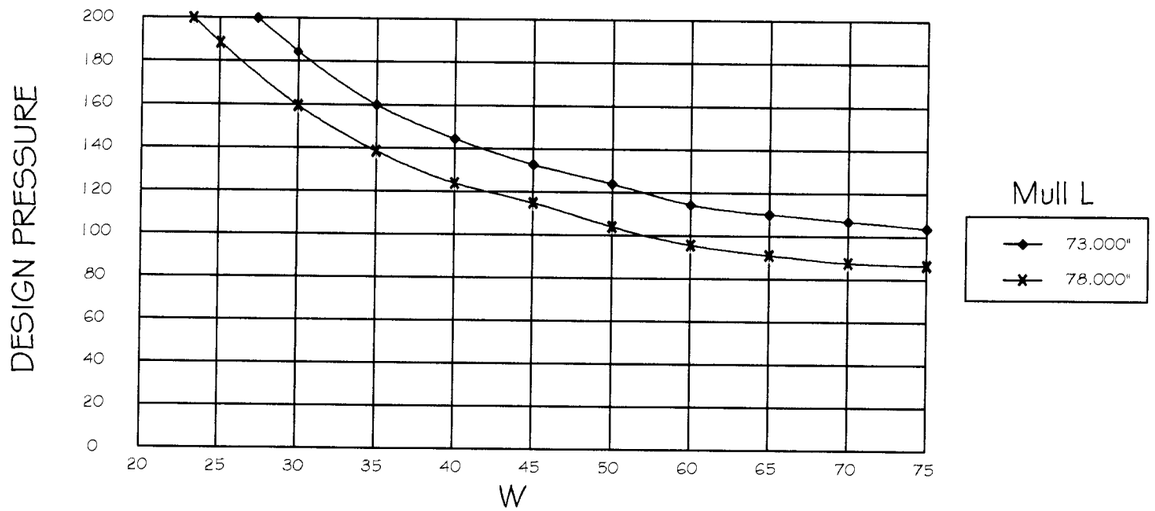

1 X 4.0 MULL
MAXIMUM DESIGN PRESSURES +/-

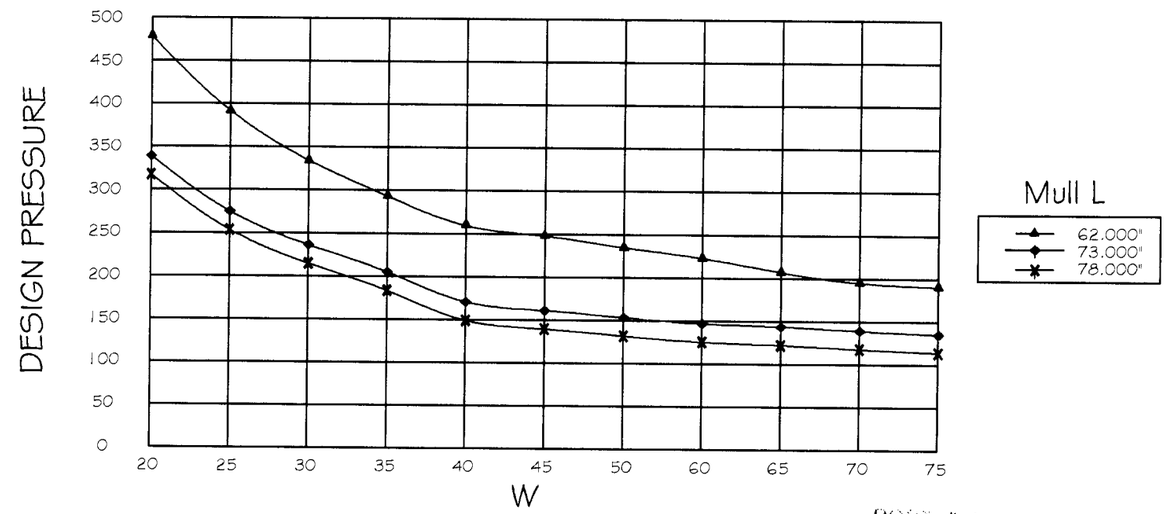

Instructions for Performance Charts

1. Get the positive and negative pressures required for the windows.Required pressures should be defined on the building plans.
2. Get the maximum window width and height of the windows to be mulled together.
3. Based on the Load Applications on sheet 1,determine W.
4. Determine the appropriate graph line(Mull 1.) based on the length of the mull.
5. determine the intersection of the graph line and the window dimension to obatain the maximum permissable design pressure of the mull.
6. The resulting design pressure must be equal to or greater than the requireed pressure obtained in step 1 above.

Example:
Two windows 25" x 49" mulled side by side with a required design pressure of +50.67 -68.00. Mull length is 49". Maximum window dimension is 25"(using the window width). The acceptable Mull woulkd be a 1" x 3.00" Mull.

Note: The design pressure applies to the mull system and does not apply to the window. The window must meet the required pressure based on a seperate product approval.

PRODUCT RENEWED

ACCEPTANCE No. 01-1214.04

EXPIRATION DATE February 1, 2007

By

PRODUCT CONTROL DIVISION
BUILDING CODE COMPLIANCE OFFICE

ROBT. E. FISHER
WM. M. MEYERS, P.E.
Consulting Engineers
9301 N.E. 6th Ave. C-30
Miami Shores, FL 33138
(305) 758-3117 557-4006 Fax 362-628
FLA. 18755
STRUCTURAL

Date: 12/11/01

Revisions: -----			BINNINGS IAN AMERICAN — AN AMERICAN ARCHITECTURAL PRODUCTS CORP. COMPANY					3000 N.W. 125th Street Miami, Florida 33167 (305) 681-0045
Perimeter: -----	Area: -----	Wgt/Ft: -----						
Material: -----	Surface Area: -----	Est. Class: -----	Draw Class: ---	Part Class: ---	Prod Category: ---	Series/Model: ---	Item: ---	Sheet: 5 OF 5
Factor: -----	CCD: -----	Scale: -----	1 X MULL w/STEEL REINFORCEMENTS PERFORMANCE CHARTS					
Drawn By: KP		Date Drawn: 1/10/96						
Revised By: SJR		Date Revised: 12/10/01	Part Number: ---		Drawing Number: PA2-DET-XLS			Revision Level: -