MIAMI-DADE

MIAMI-DADE COUNTY, FLORIDA
METRO-DADE FLAGLER BUILDING

BUILDING CODE COMPLIANCE OFFICE
METRO-DADE FLAGLER BUILDING
140 WEST FLAGLER STREET, SUITE 1603
MIAMI, FLORIDA 33130-1563
(305) 375-2901 FAX (305) 375-2908

CONTRACTOR LICENSING SECTION
(305) 375-2527 FAX (305) 375-2558

CONTRACTOR ENFORCEMENT DIVISION
(305) 375-2966 FAX (305) 375-2908

PRODUCT CONTROL DIVISION
(305) 375-2902 FAX (305) 372-6339

PRODUCT CONTROL NOTICE OF ACCEPTANCE

Senergy, Inc.
3550 St.Johns Bluff road, South
Jacksonville ,FL 32224-2614

Your application for Notice of Acceptance (NOA) of:
Senerflex Wall System (Large Missile)
under Chapter 8 of the Code of Miami-Dade County governing the use of Alternate Materials and Types of Construction, and completely described herein, has been recommended for acceptance by the Miami-Dade County Building Code Compliance Office (BCCO) under the conditions specified herein.

This NOA shall not be valid after the expiration date stated below. BCCO reserves the right to secure this product or material at any time from a jobsite or manufacturer's plant for quality control testing. If this product or material fails to perform in the approved manner, BCCO may revoke, modify, or suspend the use of such product or material immediately. BCCO reserves the right to revoke this approval, if it is determined by BCCO that this product or material fails to meet the requirements of the South Florida Building Code.

The expense of such testing will be incurred by the manufacturer.

ACCEPTANCE NO.: 01-1220.05
EXPIRES: 11/05/2006

Raul Rodriguez
Chief Product Control Division

THIS IS THE COVERSHEET, SEE ADDITIONAL PAGES FOR SPECIFIC AND GENERAL CONDITIONS
BUILDING CODE & PRODUCT REVIEW COMMITTEE

This application for Product Approval has been reviewed by the BCCO and approved by the Building Code and Product Review Committee to be used in Miami-Dade County, Florida under the conditions set forth above.

Francisco J. Quintana, R.A.
Director
Miami-Dade County
Building Code Compliance Office

APPROVED: 01/24/2002

NOTICE OF ACCEPTANCE: SPECIFIC CONDITIONS

1. SCOPE

1.1 This **renews** Notice of Acceptance (NOA) No. **99-1005.05**, which was issued on April 7, 2000. It renews the approval of a Senergy Exterior Insulation and Finish System, as described in Section 2 of this NOA, designed to comply with the South Florida Building Code (SFBC), 1994 Edition for Miami-Dade County, for the locations where the pressure requirements, as determined by SFBC Chapter 23, do not exceed the Design Pressure Rating values indicated in the approved drawings.

2. PRODUCT DESCRIPTION

2.1 The **Senergy Exterior Insulation and Finish System** and its components shall be constructed in strict compliance with the following document: Drawing No no number, Sheets 1 through 3 of 3, titled "Typical Details for Senerflex Wall System over Dens-Gold Frame (Small Missile)," prepared by manufacturer, dated 09/28/96 and revised on 01/10/00, bearing the Miami-Dade County Product Control renewal stamp with the NOA number and expiration date by the Miami-Dade County Product Control Division. This document shall hereinafter be referred to as the approved drawings.

3. LIMITATIONS:

3.1 This system is not to be used on horizontal surfaces exposed to weather except as a soffit, it is intended to be used on wall systems only.

4. INSTALLATION

4.1 The Senergy EIFS and its components shall be installed in strict compliance with the approved drawing.

4.2 The installation of this product does not require Hurricane Protection System.

5. LABELING

5.1 Each unit shall bear a permanent label with the manufacturer's name or logo, city, state and following statement: "Miami-Dade County Product Control Approved".

6. BUILDING PERMIT REQUIREMENTS

6.1 Application for building permit shall be accompanied by copies of the following:

- **6.1.1** This Notice of Acceptance
- **6.1.2** Duplicate copies of the approved drawings, as identified in Section 2 of this Notice of Acceptance, clearly marked to show the components selected for the proposed installation.
- **6.1.3** Any other documents required by the Building Official or the South Florida Building Code (SFBC) in order to properly evaluate the installation of this system.

Raul Rodriguez, Chief
Product Control Division

NOTICE OF ACCEPTANCE: STANDARD CONDITIONS

1. Renewal of this Acceptance (approval) shall be considered after a renewal application has been filed and the original submitted documentation, including test supporting data, engineering documents, are no older than eight (8) years.

2. Any and all approved products shall be permanently labeled with the manufacturer's name, city, state, and the following statement: "Miami-Dade County Product Control Approved", or as specifically stated in the specific conditions of this Acceptance.

3. Renewals of Acceptance will not be considered if:
   a) There has been a change in the South Florida Building Code affecting the evaluation of this product and the product is not in compliance with the code changes;
   b) The product is no longer the same product (identical) as the one originally approved;
   c) If the Acceptance holder has not complied with all the requirements of this acceptance, including the correct installation of the product;
   d) The engineer who originally prepared, signed and sealed the required documentation initially submitted is no longer practicing the engineering profession.

4. Any revision or change in the materials, use, and/or manufacture of the product or process shall automatically be cause for termination of this Acceptance, unless prior written approval has been requested (through the filing of a revision application with appropriate fee) and granted by this office.

5. Any of the following shall also be grounds for removal of this Acceptance:
   a) Unsatisfactory performance of this product or process.
   b) Misuse of this Acceptance as an endorsement of any product, for sales, advertising or any other purpose.

6. The Notice of Acceptance number preceded by the words Miami-Dade County, Florida, and followed by the expiration date may be displayed in advertising literature. If any portion of the Notice of Acceptance is displayed, then it shall be done in its entirety.

7. A copy of this Acceptance as well as approved drawings and other documents, where it applies, shall be provided to the user by the manufacturer or its distributors and shall be available for inspection at the job site at all time. The engineer need not reseal the copies.

8. Failure to comply with any section of this Acceptance shall be cause for termination and removal of Acceptance.

9. This Notice of Acceptance consists of pages 1, 2 and this last page 3.

END OF THIS ACCEPTANCE

Raul Rodriguez, Chief
Product Control Division

SENERGY

DATE: 9/28/98 | Page 1 of 3

Typical Details for Senerflex Wall System over Dens Glass Gold Frame (Small Missile)

REVISIONS	DATES
	1/10/00

3/8/00

ENGINEER'S: NAME NUMBER & DISCIPLINE

REVIEWED BY:

TILLECO INC.

TILLIT TESTING & ENGINEERING COMPANY
6595 NW 36th STREET, STE. 217
MIAMI, FLORIDA 33166
WALTER A. TILLIT JR., P.E.
STRUCTURAL ENGINEER
FL. LIC.NO. 44167

FOR OFFICE USE

APPROVED AS COMPLYING WITH THE SOUTH FLORIDA BUILDING CODE
DATE April 07 2000
BY
PRODUCT CONTROL DIVISION
BUILDING CODE COMPLIANCE OFFICE
ACCEPTANCE NO. 99-1005.05

10245 Centurion Parkway North
Jacksonville, FL 32256
800-221-9266
www.senergyelfs.com

APPLICATION NOTES

1)"ALLIED FOAM" OR "APACHE" EPS HAS A DENSITY OF 1 PCF AND IT SHALL BE APPLIED HORIZONTALLY IN A RUNNING BOND PATTERN STAGGERING VERTICAL JOINTS AND CORNERS.

2) SENERFLEX BASE COAT IS MIXED AT TIME OF USE WITH PORTLAND CEMENT (1 TO 1 BY WEIGHT) AND WATER WITH PADDLE AND DRILL TO A HOMOGENEOUS CONSISTENCY.

3) FLEXGUARD 4 IS A GLASS FIBER, OPEN WEAVE REINFORCING FABRIC THAT WEIGHS 4.2 OZ/SQUARE YARD. EDGES SHALL BE LAPPED BY 2 1/2 INCHES.

4) SENERFLEX FINISH IS AN ACRYLIC BASED TEXTURE EXTERIOR COATING READY MIXED FROM THE FACTORY. IT IS APPLIED WITH A STAINLESS STEEL TROWEL AND FLOATED TO A DESIRED TEXTURE.

GENERAL NOTES

1) THIS SYSTEM HAS BEEN DESIGNED IN ACCORDANCE WITH THE SOUTH FLORIDA BUILDIING CODE 1994 EDITION AND ITS LATEST SUPPPLEMENTS.

2) THIS SYSTEM HAS BEEN TESTED IN ACCORDANCE WITH DADE COUNTY PROTOCOL PA-201, PA-202 & PA-203 FOR SMALL MISSILE IMPACT, STRUCTURAL AND CYCLIC TESTING.

3) THIS SYSTEM SHALL BE APPLIED BY A LICENSED PLASTERING CONTRACTOR FOLLOWING THIS NOTICE OF ACCEPTANCE, THE RECOMMENDATIONS OF SENERGY INC. AND THE APPLICABLE SECTION OF THE SOUTH FLORIDA BUILDING CODE.

4) THE ENGINEER AND/OR ARCHITECT OF RECORD FOR EACH PROJECT USING THIS SYSTEM SHALL SIZE ALL STUD FRAMING TO ENSURE CONFORMANCE WITH STUD DEFLECTION AND STRESS LIMITATIONS AS REQUIRED BY GOVERNING CODE AND THIS DOCUMENT.

5) ALL STUDS USED WITH THIS SYSTEM SHALL BE COMPLETELY SHEATHED AT THE INTERIOR FLANGE OR BRIDGED AT MAXIMUM EVERY 5 FT. OF STUD LENGTH OR AS SPECIFIED BY THE MANUFACTURER.

6) ALL STEEL STUDS SHALL BE STRUCTURAL WITH 1 5/8" MIN FLANGE WIDTH AND HAVE A MINIMUM YIELD STRENGTH OF 33000 PSI

7) DETAILS ON SHEET 2 & 3 OF 3 ARE TYPICAL AND SHOW INTENT TO PREVENT WATER INFILTRATION INTO AND BEHIND THE SYSTEM. ALTERNATE DETAILS AND SPECIFIC CONDITIONS NOT COVERED BY THE TYPICAL DETAILS ARE THE RESPONSIBILITY OF THE LICENSED DESIGN PROFESSIONAL IN CONSULTATION WITH SENERGY, INC.

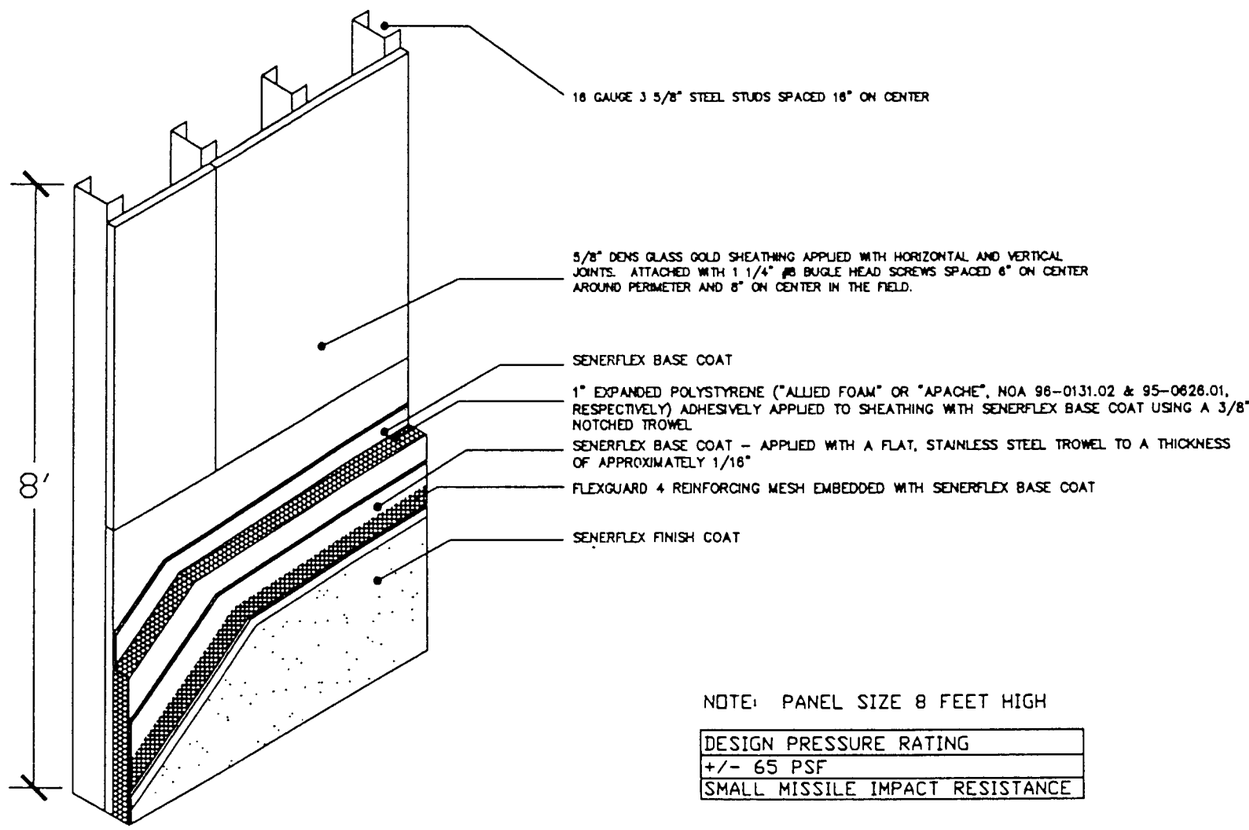

NOTE: PANEL SIZE 8 FEET HIGH

DESIGN PRESSURE RATING
+/- 65 PSF
SMALL MISSILE IMPACT RESISTANCE

PRODUCT RENEWED

ACCEPTANCE No. 01-1220.05

EXPIRATION DATE November 5, 2006

By

PRODUCT CONTROL DIVISION
BUILDING CODE COMPLIANCE OFFICE

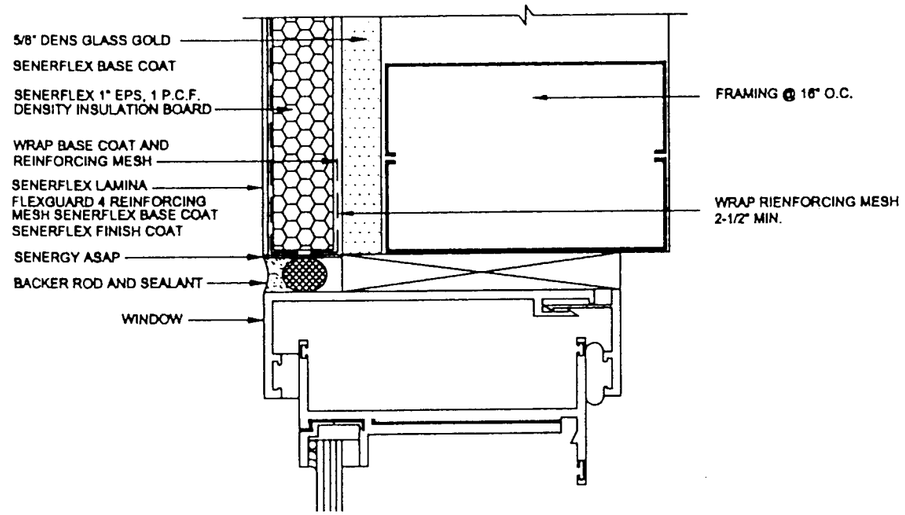

WINDOW JAMB DETAIL (FLUSH)

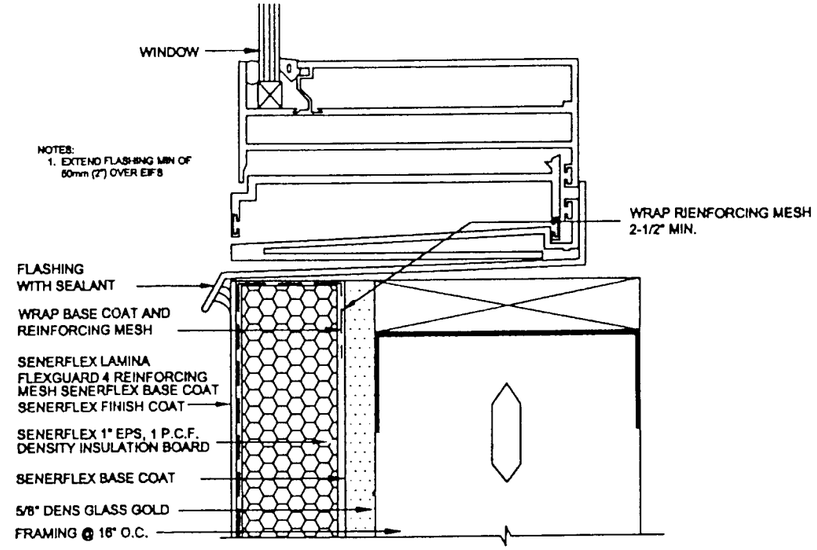

WINDOW SILL DETAIL (FLUSH)

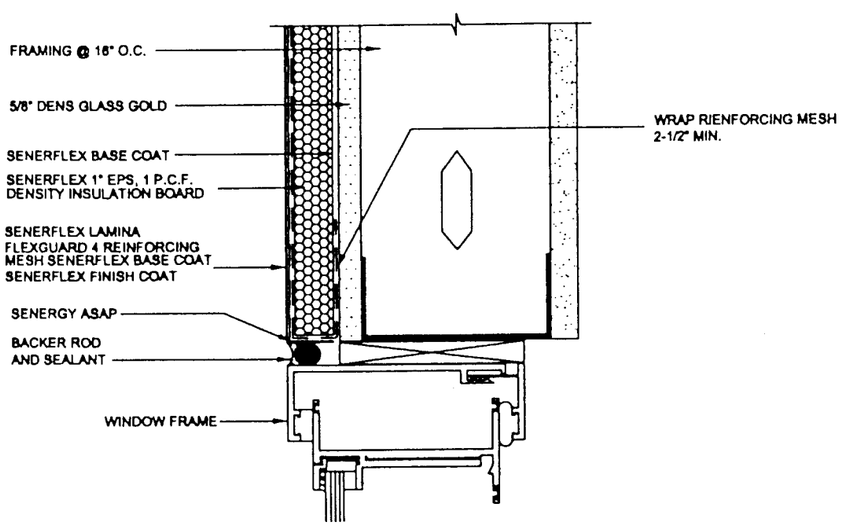

TYPICAL WINDOW HEAD (FLUSH)

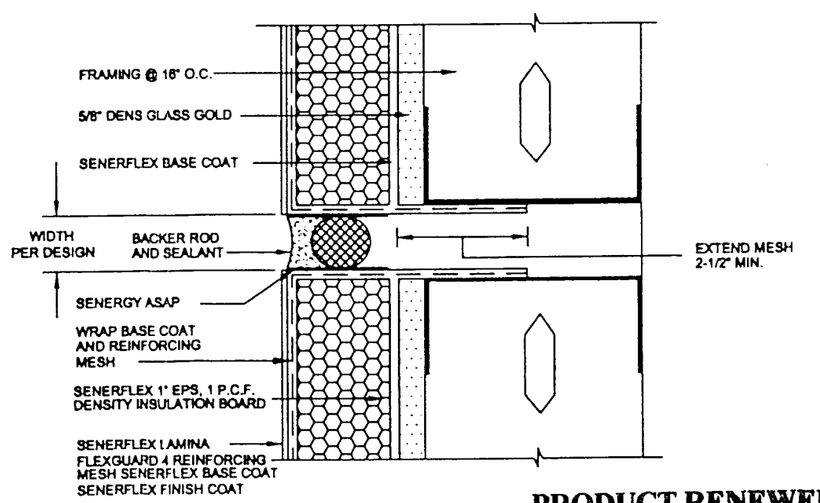

EXPANSION JOINT DETAIL

NOTE: SENERGY ASAP IS APPLIED TO SENERFLEX BASE COAT IN SEALANT JOINTS PRIOR TO APPLICATION OF SEALANT SYSTEM

PRODUCT RENEWED

ACCEPTANCE No. 01-1220.05

EXPIRATION DATE November 5, 2006

By

PRODUCT CONTROL DIVISION
BUILDING CODE COMPLIANCE OFFICE

SENERGY

DATE: 1/10/00 | Page 2 of 3

Typical Details for Senerflex Wall System over Dens Glass Gold Frame (Small Missile)

REVISIONS DATES

3/8/00

ENGINEER'S: NAME NUMBER & DISCIPLINE

REVIEWED BY:

TILTECO INC.

TILLIT TESTING & ENGINEERING COMPANY
6595 NW 36th STREET, STE. 217
MIAMI, FLORIDA 33166
WALTER A. TILLIT JR., P.E.
STRUCTURAL ENGINEER
FL. LIC.NO. 44167

FOR OFFICE USE

APPROVED AS COMPLYING WITH THE SOUTH FLORIDA BUILDING CODE
DATE April 07, 2000
BY
PRODUCT CONTROL DIVISION
BUILDING CODE COMPLIANCE OFFICE
ACCEPTANCE NO. 99-1005.05

10245 Centurion Parkway North
Jacksonville, FL 32256
800-221-9255
www.senergyeifs.com

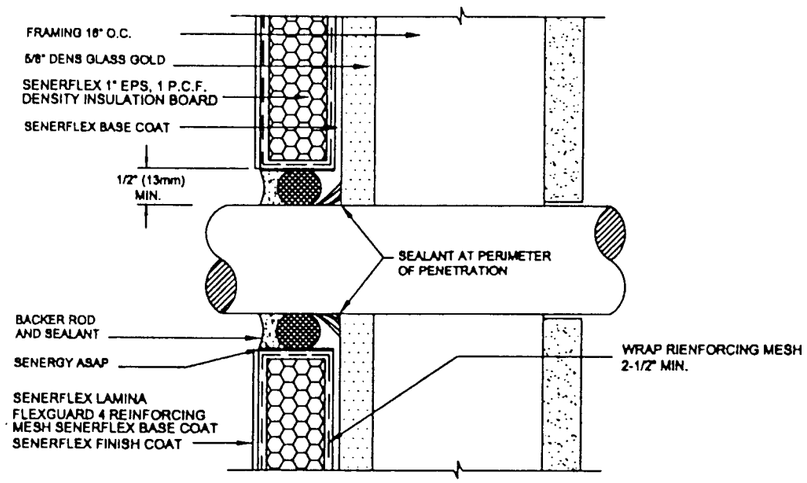

TYPICAL PIPE PENETRATION

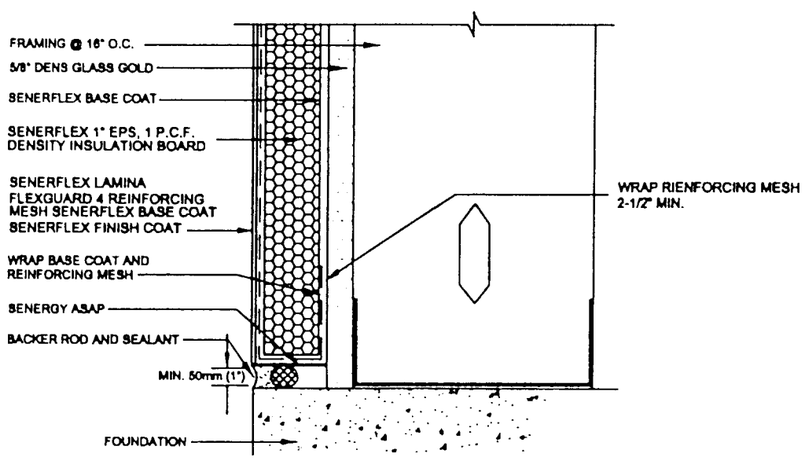

TERMINATION AT FOUNDATION (FLUSH)

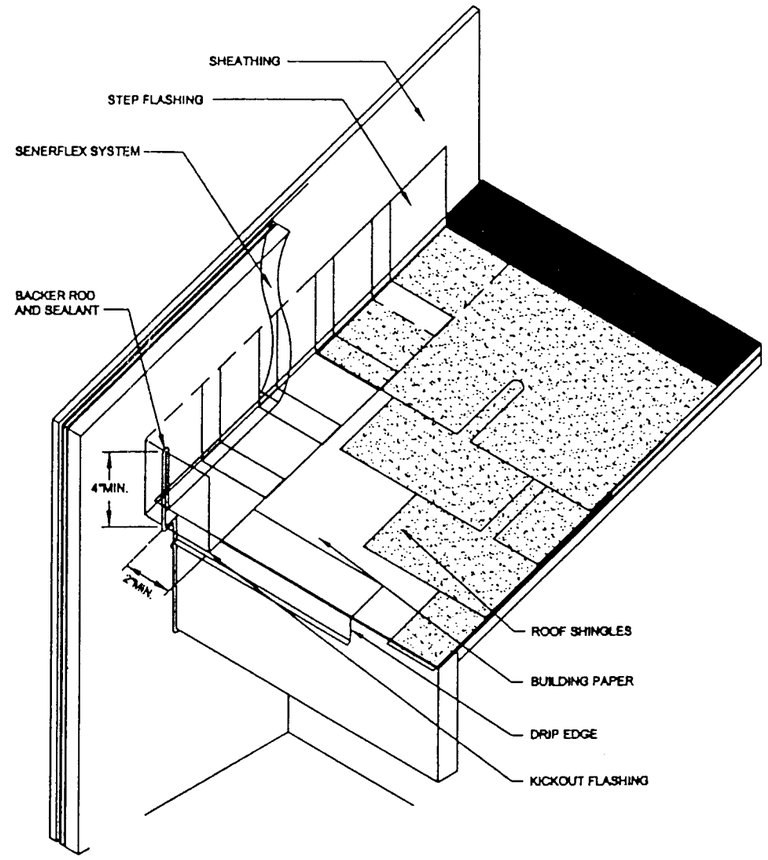

NOTE:
1. KICKOUT FLASHING MUST BE ANGLED 100° MIN. TO ALLOW FOR PROPER DRAINAGE.
2. KICKOUT FLASHING SEAMS MUST BE SOLDERED OR SEALED WITH APPROPRIATE SEALANT.
3. TERMINATE SENERFLEX SYSTEM 1" (25mm) MIN. ABOVE ROOF
4. ROOFING DETAIL SHALL COMPLY WITH CHAPTER 34 OF THE S.F.B.C.

KICKOUT FLASHING DETAIL

PRODUCT RENEWED

ACCEPTANCE No. 01-1220.05

EXPIRATION DATE November 5, 2006

By

PRODUCT CONTROL DIVISION
BUILDING CODE COMPLIANCE OFFICE

NOTE: SENERGY ASAP IS APPLIED TO SENERFLEX BASE COAT IN SEALANT JOINTS PRIOR TO APPLICATION OF SEALANT SYSTEM

SENERGY

DATE: 1/10/00 | Page 3 of 3

Typical Details for Senerflex Wall System over Dens Glass Gold Frame (Small Missile)

REVISIONS DATES

3/8/00

ENGINEER'S: NAME NUMBER & DISCIPLINE

REVIEWED BY:

TILTECO INC.
TILLIT TESTING & ENGINEERING COMPANY
6595 NW 36th STREET, STE. 217
MIAMI, FLORIDA 33166
WALTER A. TILLIT JR., P.E.
STRUCTURAL ENGINEER
FL. LIC.NO. 44167

FOR OFFICE USE

APPROVED AS COMPLYING WITH THE SOUTH FLORIDA BUILDING CODE
DATE April 27, 2000
BY
PRODUCT CONTROL DIVISION
BUILDING CODE COMPLIANCE OFFICE
ACCEPTANCE NO. 99-1005.05

10245 Centurion Parkway North
Jacksonville, FL 32256
800-221-9255
www.senergyelfs.com