MIAMI-DADE

MIAMI-DADE COUNTY, FLORIDA
METRO-DADE FLAGLER BUILDING

BUILDING CODE COMPLIANCE OFFICE
METRO-DADE FLAGLER BUILDING
140 WEST FLAGLER STREET, SUITE 1603
MIAMI, FLORIDA 33130-1563
(305) 375-2901 FAX (305) 375-2908

CONTRACTOR LICENSING SECTION
(305) 375-2527 FAX (305) 375-2558

CONTRACTOR ENFORCEMENT DIVISION
(305) 375-2966 FAX (305) 375-2908

PRODUCT CONTROL DIVISION
(305) 375-2902 FAX (305) 372-6339

PRODUCT CONTROL NOTICE OF ACCEPTANCE

Hurst Awning Co., Inc.
6865 NW 36th Street
Miami ,FL 33147

Your application for Notice of Acceptance (NOA) of:
20 ga. Steel Storm Panel Systems
under Chapter 8 of the Code of Miami-Dade County governing the use of Alternate Materials and Types of Construction, and completely described herein, has been recommended for acceptance by the Miami-Dade County Building Code Compliance Office (BCCO) under the conditions specified herein.

This NOA shall not be valid after the expiration date stated below. BCCO reserves the right to secure this product or material at any time from a jobsite or manufacturer's plant for quality control testing. If this product or material fails to perform in the approved manner, BCCO may revoke, modify, or suspend the use of such product or material immediately. BCCO reserves the right to revoke this approval, if it is determined by BCCO that this product or material fails to meet the requirements of the South Florida Building Code.

The expense of such testing will be incurred by the manufacturer.

ACCEPTANCE NO.: 01-1224.01
EXPIRES: 02/16/2007

Raul Rodriguez
Chief Product Control Division

THIS IS THE COVERSHEET, SEE ADDITIONAL PAGES FOR SPECIFIC AND GENERAL CONDITIONS
BUILDING CODE & PRODUCT REVIEW COMMITTEE

This application for Product Approval has been reviewed by the BCCO and approved by the Building Code and Product Review Committee to be used in Miami-Dade County, Florida under the conditions set forth above.

Francisco J. Quintana, R.A.
Director
Miami-Dade County
Building Code Compliance Office

APPROVED: 01/31/2002

NOTICE OF ACCEPTANCE: SPECIFIC CONDITIONS

1. SCOPE

1.1 This **renews** Notice of Acceptance (NOA) No. **00-0920.03**, which was issued on November 22, 2000. It renews the approval of an aluminum fixed window, as described in Section 2 of this NOA, designed to comply with the South Florida Building Code (SFBC), 1994 Edition for Miami-Dade County, for the locations where the pressure requirements, as determined by SFBC Chapter 23, do not exceed the Design Pressure Rating values indicated in the approved drawings.

2. PRODUCT DESCRIPTION

2.1 The **20 Gauge Galvanized Steel Storm Panel Shutter** and its components shall be constructed in strict compliance with the following document: Drawing No **98-218**, Sheets 1 through 8 of 8, titled "20 Ga. Steel Storm Panel," prepared by Knezevich & Associates, Inc., dated 9/30/98 and revised on 2/4/99, bearing the Miami-Dade County Product Control renewal stamp with the NOA number and expiration date by the Miami-Dade County Product Control Division. This document shall hereinafter be referred to as the approved drawings.

3. LIMITATIONS

3.1 All permanent set components, included but not limited to embedded anchor bolts, threaded cones, metal shields, headers and sills, must be protected against corrosion, contamination and damage at all times.

4. INSTALLATION

4.1 The 20 gauge galvanized steel storm panels shutter and its components shall be installed in strict compliance with the approved drawings.

5. LABELING

5.1 Each unit shall bear a permanent label with the manufacturer's name or logo, city, state and following statement: "Miami-Dade County Product Control Approved".

6. BUILDING PERMIT REQUIREMENTS

6.1 Application for building permit shall be accompanied by copies of the following:

6.1.1 This Notice of Acceptance

6.1.2 Duplicate copies of the approved drawings, as identified in Section 2 of this Notice of Acceptance, clearly marked to show the components selected for the proposed installation.

6.1.3 Any other documents required by the Building Official or the South Florida Building Code (SFBC) in order to properly evaluate the installation of this system.

Raul Rodriguez, Chief
Product Control Division

Hurst Awning Company, Inc.

ACCEPTANCE No.: **01-1224.01**

APPROVED: **January 31, 2002**

EXPIRES: **February 16, 2007**

NOTICE OF ACCEPTANCE: STANDARD CONDITIONS

1. Renewal of this Acceptance (approval) shall be considered after a renewal application has been filed and the original submitted documentation, including test supporting data, engineering documents, are no older than eight (8) years.

2. Any and all approved products shall be permanently labeled with the manufacturer's name, city, state, and the following statement: "Miami-Dade County Product Control Approved", or as specifically stated in the specific conditions of this Acceptance.

3. Renewals of Acceptance will not be considered if:
   a) There has been a change in the South Florida Building Code affecting the evaluation of this product and the product is not in compliance with the code changes;
   b) The product is no longer the same product (identical) as the one originally approved;
   c) If the Acceptance holder has not complied with all the requirements of this acceptance, including the correct installation of the product;
   d) The engineer who originally prepared, signed and sealed the required documentation initially submitted is no longer practicing the engineering profession.

4. Any revision or change in the materials, use, and/or manufacture of the product or process shall automatically be cause for termination of this Acceptance, unless prior written approval has been requested (through the filing of a revision application with appropriate fee) and granted by this office.

5. Any of the following shall also be grounds for removal of this Acceptance:
   a) Unsatisfactory performance of this product or process.
   b) Misuse of this Acceptance as an endorsement of any product, for sales, advertising or any other purpose.

6. The Notice of Acceptance number preceded by the words Miami-Dade County, Florida, and followed by the expiration date may be displayed in advertising literature. If any portion of the Notice of Acceptance is displayed, then it shall be done in its entirety.

7. A copy of this Acceptance as well as approved drawings and other documents, where it applies, shall be provided to the user by the manufacturer or its distributors and shall be available for inspection at the job site at all time. The engineer need not reseal the copies.

8. Failure to comply with any section of this Acceptance shall be cause for termination and removal of Acceptance.

9. This Notice of Acceptance consists of pages 1, 2 and this last page 3.

END OF THIS ACCEPTANCE

Raul Rodriguez, Chief
Product Control Division

PRODUCT RENEWED

ACCEPTANCE No. 01-1224.01

EXPIRATION DATE February 16, 2007

By [signature]

PRODUCT CONTROL DIVISION
BUILDING CODE COMPLIANCE OFFICE

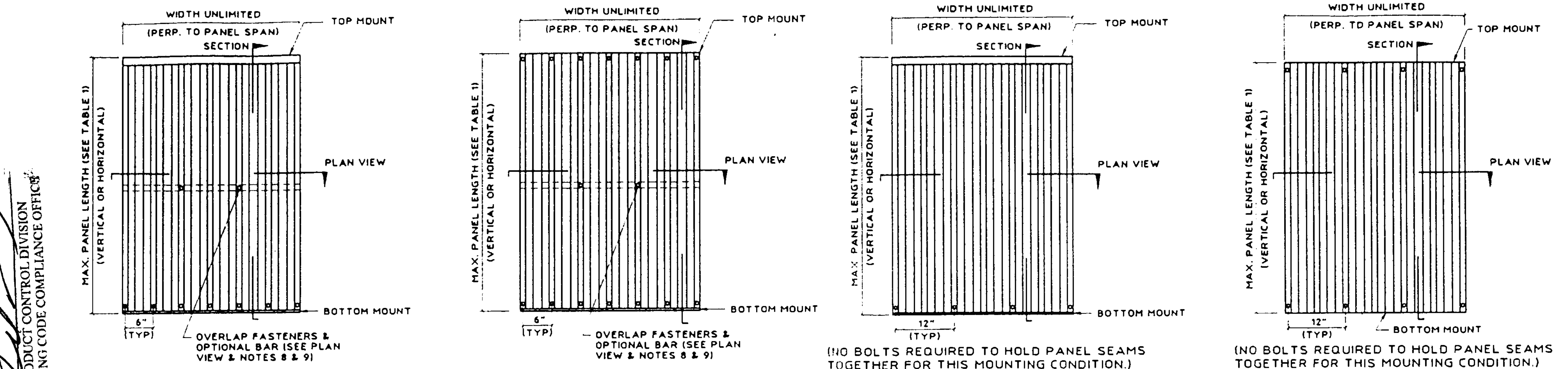

TYPICAL ELEVATION - TYPE I

TYPICAL ELEVATION - TYPE II

TYPICAL ELEVATION - TYPE III

TYPICAL ELEVATION - TYPE IV

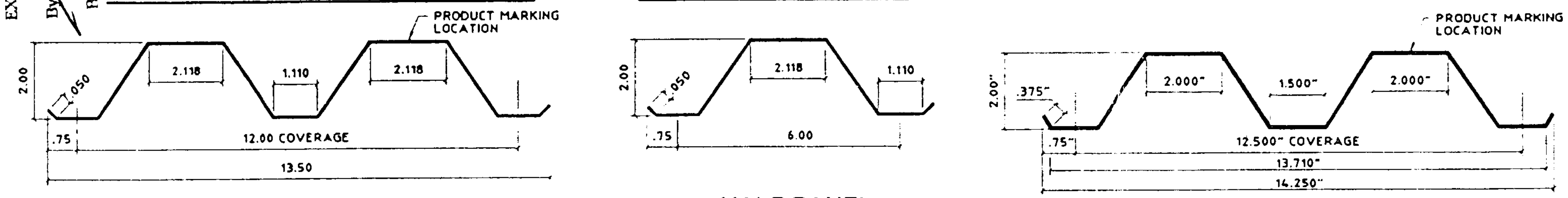

FULL PANEL

HALF PANEL

ONE HALF PANEL PER OPENING MAY BE USED AS REQUIRED TO COVER OPENING.

FULL PANEL

(1) STORM PANEL

SCALE : 3" = 1'-0"

(1a) STORM PANEL

SCALE : 3" = 1'-0"

SEE GENERAL NOTE #12 SHEET 1 OF 8.

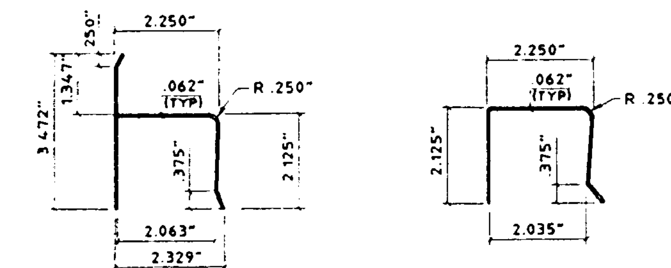

(2) "h" HEADER

SCALE : 3" = 1'-0"

(3) "U" HEADER

SCALE : 3" = 1'-0"

GENERAL NOTES:

1. THIS SHUTTER SYSTEM IS DESIGNED IN ACCORDANCE WITH THE SOUTH FLORIDA BUILDING CODE, 1994 EDITION.
2. POSITIVE AND NEGATIVE DESIGN PRESSURE CALCULATIONS SHALL BE PERFORMED FOR SPECIFIC JOBS IN ACCORDANCE WITH ASCE 7-88 "MINIMUM DESIGN LOADS FOR BUILDINGS AND OTHER STRUCTURES".
3. STORM PANELS SHALL BE 20 GAUGE STEEL (t = .035") CONFORMING TO ASTM A653, SQ. GRADE 50, G60 GALVANIZED COATING. EXTRUSIONS SHALL BE 6063-T6 ALUMINUM, U.O.N.
4. PRODUCT MARKINGS SHALL BE WITHIN 12" OF ONE END OF THE PANEL WITH A MINIMUM OF ONE MARKING PER PANEL AND SHALL BE PERMANENTLY LABELED AS FOLLOWS:

   HURST AWNING CO., INC.
   MIAMI, FL
   DADE COUNTY PRODUCT CONTROL APPROVED

5. ALL BOLTS AND WASHERS SHALL BE GALVANIZED OR STAINLESS STEEL WITH A MINIMUM TENSILE STRENGTH OF 60 KSI OR APPROVED COATED HARDWARE.
6. MATERIAL SPECIFICATIONS NOTED HEREIN ARE THE MANUFACTURER'S REPRESENTATION OF MATERIALS USED IN PRODUCT TESTING.
7. TOP & BOTTOM DETAILS SHOWN MAY BE INTERCHANGED AS FIELD CONDITIONS DICTATE. PANELS MAY BE MOUNTED HORIZONTALLY WHERE APPLICABLE.
8. FOR TYPE I & TYPE II PANELS, AN OPTIONAL 1" x 1" x 16 GA STEEL BAR MAY BE USED TO CONTROL DEFLECTION OF STORM PANEL SYSTEM ON INSTALLATIONS BELOW 30' ABOVE GRADE, PROVIDED THAT THE PANEL SPANS USED ARE 101" OR LESS, AND THAT THE SEPARATION FROM GLASS IS 2" OR MORE BUT LESS THAN 2.5".
9. TYPE I & II PANELS SHALL BE FASTENED AT MIDSPAN W/ 1/4-20 x 1" BOLTS WITH DIE CAST ALUMINUM WASHERED WINGNUTS OR JACKNUTS (SEE TYPICAL ELEVATIONS). FOR PANEL SPANS LESS THAN 48", MIDSPAN FASTENERS ARE NOT REQUIRED. TYPE I & II PANELS UTILIZING A STEEL BAR SHALL BE FASTENED AT OVERLAPS AT MIDSPAN TO A 1" x 1" x 16 GAUGE STEEL BAR USING 1/4-20 x 3-1/2" BOLTS WITH DIE CAST ALUMINUM WASHERED WINGNUTS OR JACKNUTS (SEE TYPICAL ELEVATIONS). FOR TYPE III & IV PANELS, FASTENERS AT PANEL MIDSPAN ARE NOT REQUIRED.
10. THE DETAILS AND SPECIFICATIONS SHOWN HEREIN REPRESENT THE PRODUCTS TESTED FOR IMPACT, CYCLIC AND UNIFORM STATIC AIR PRESSURE TESTING IN CONFORMANCE WITH DADE COUNTY PROTOCOLS PA 201,202, AND 203. **DESIGN IS BASED ON HURRICANE ENGINEERING & TESTING (HETI) REPORT No. 94-312c, No. 94-317b, No. 95-401b, AND CONSTRUCTION AND TESTING CORP. (CTC) REPORT No. 95-021, 95-031, 96-006R AND 98-044.**
11. AT LEAST ONE WARNING NOTE PER OPENING SHALL BE PLACED IN A CONSPICUOUS LOCATION ON ANY OF THE COMPONENTS OF THE STORM PANEL SYSTEM ADVISING THE HOME OWNER OR TENANT THAT THE STORM PANELS WILL NOT OFFER HURRICANE PROTECTION UNLESS ALL REINFORCING BOLTS AND OR BARS ARE PROPERLY INSTALLED WHEN REQUIRED. WARNING LABEL SHALL BE FASTENED WITH PERMANENT ADHESIVE OR MECHANICALLY.
12. WHEN PANEL (1a) IS USED, 6-1/4" AND 12-1/2" O.C. SHALL BE USED IN ALL DETAILS IN THESE DRAWINGS IN LIEU OF 6" AND 12" BUT FASTENER SPACING SHALL NOT EXCEED THAT SHOWN IN ANCHOR SCHEDULE ON PAGES 6 ,7 & 8.

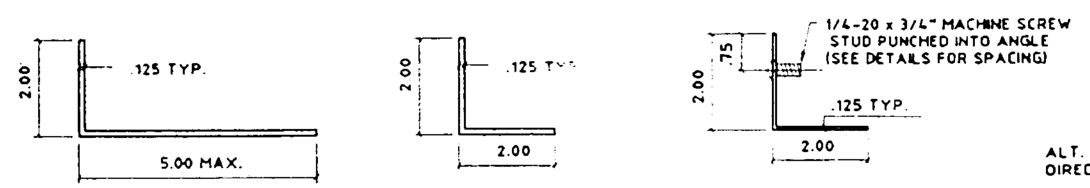

(4) ANGLE

SCALE : 3" = 1'-0"

(5) ANGLE

SCALE : 3" = 1'-0"

(6) STUDDED ANGLE

SCALE : 3" = 1'-0"

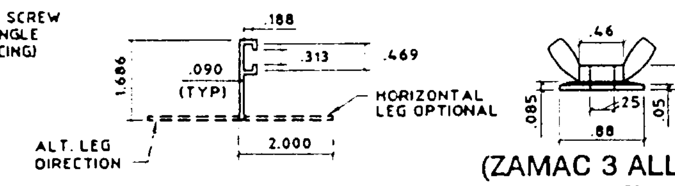

(7) "F" TRACK

SCALE : 3" = 1'-0"

(8) (ZAMAC 3 ALLOY) WASHERED WINGNUT

SCALE : HALF SIZE

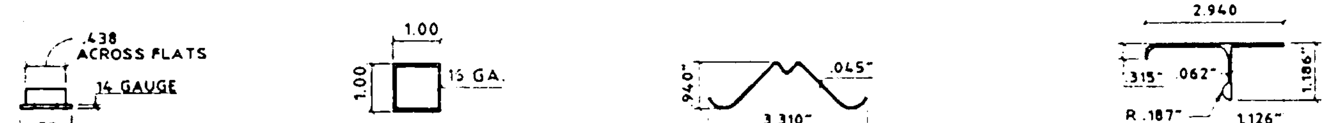

(8a) WASHERED NUT

SCALE : HALF SIZE

(9) STEEL BAR

SCALE : 3" = 1'-0"

(10) SPRING LOCKING CLIP (1" WIDE)

SCALE : 3" = 1'-0"

(11) SILL TRACK (WITH 1/4" x 1-5/8" SLOT @ 6" O.C.)

SCALE : 3" = 1'-0"

NOTE:
WASHERED NUT (8a) MUST BE PLACED OVER NARROW PORTION OF KEYHOLE SLOT

APPROVED AS COMPLYING WITH THE SOUTH FLORIDA BUILDING CODE
DATE February 11 1999
BY [signature]
PRODUCT CONTROL DIVISION
BUILDING CODE COMPLIANCE OFFICE
ACCEPTANCE NO. 98-1021.03

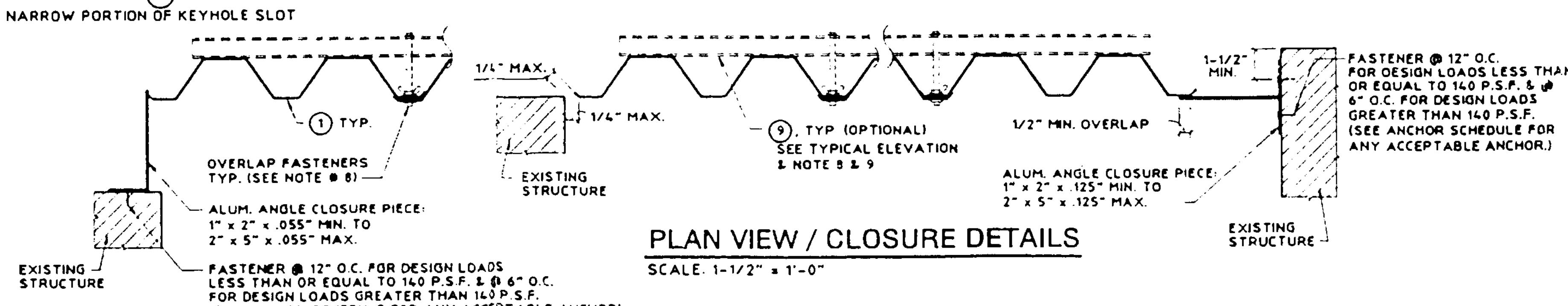

PLAN VIEW / CLOSURE DETAILS

SCALE: 1-1/2" = 1'-0"

KNEZEVICH & ASSOCIATES, INC.
CONSULTING ENGINEERS • PRODUCT TESTING
641 MOKENA DRIVE-MIAMI SPRINGS, FLORIDA 33166
MIAMI (305) 883-9571 FT. LAUDERDALE (954) 677-9500
FAX: (305) 883-9572

COPYRIGHT 1998 KNEZEVICH & ASSOCIATES, INC.

20 GA. STEEL STORM PANEL

HURST AWNING COMPANY, INC. "QUALITY SERVICE SINCE 1957" MANUFACTURERS OF HURRICANE & SECURITY PROTECTION PRODUCTS 5795 NW 36th AVENUE MIAMI, FLORIDA 33142 PH: (305) 633-0900 / (800) 327-0905 FAX: (305) 634-9078

no	date	by	description
1	09/30/98	VJK	PREV. DRAWING # 95-331
2	01/04/98	VJK	GENERAL REVISIONS

V.J. KNEZEVICH
PROFESSIONAL ENGINEER
FL License No: PE 0010983

JAN - 6 1999

date 09/30/98	
scale AS NOTED	drawn by MC
design by VJK	checked by VJK
drawing no. 98-218	
sheet 1 of 8	

01/05/99 16:16

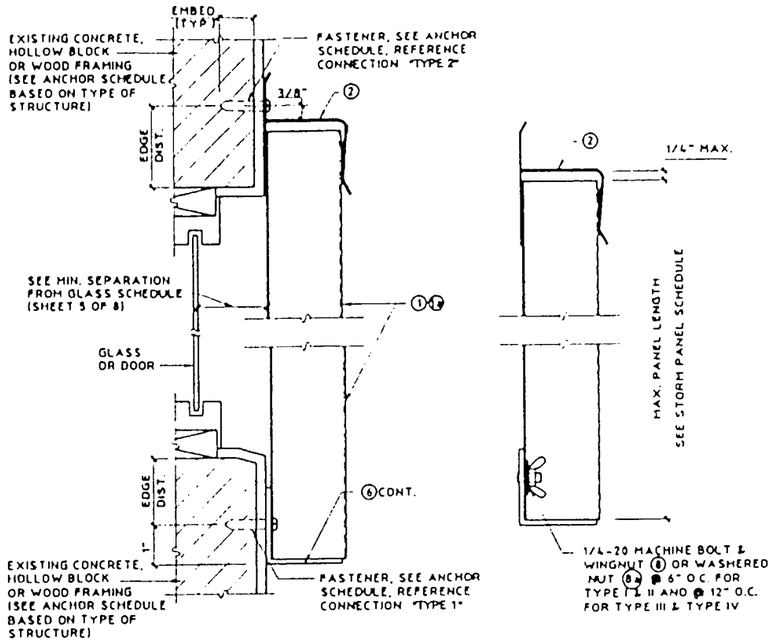

Ⓐ WALL MOUNT SECTION

SCALE : 3" = 1'-0"

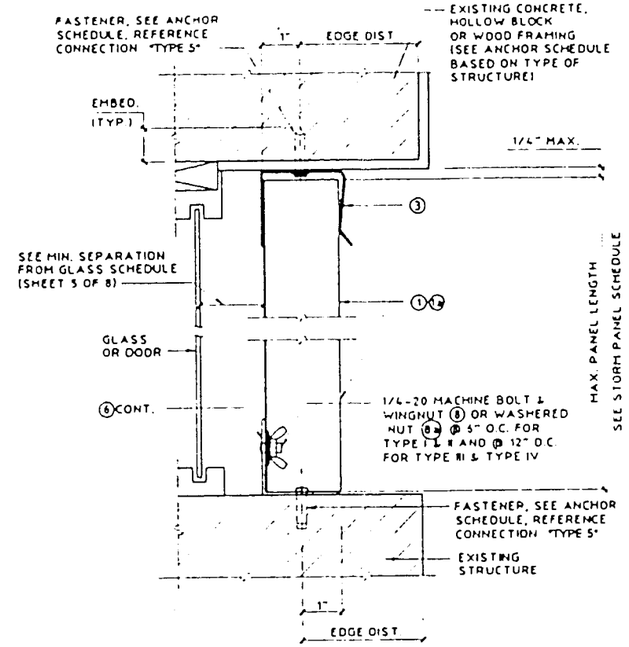

Ⓑ CEILING/INSIDE MOUNT SECTION

SCALE : 3" = 1'-0"

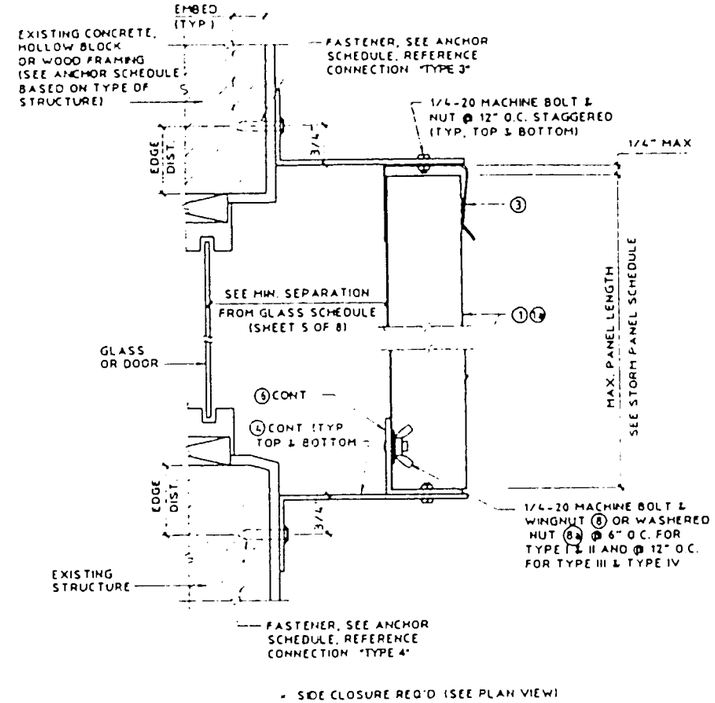

Ⓒ BUILD-OUT MOUNT SECTION

SCALE : 3" = 1'-0"

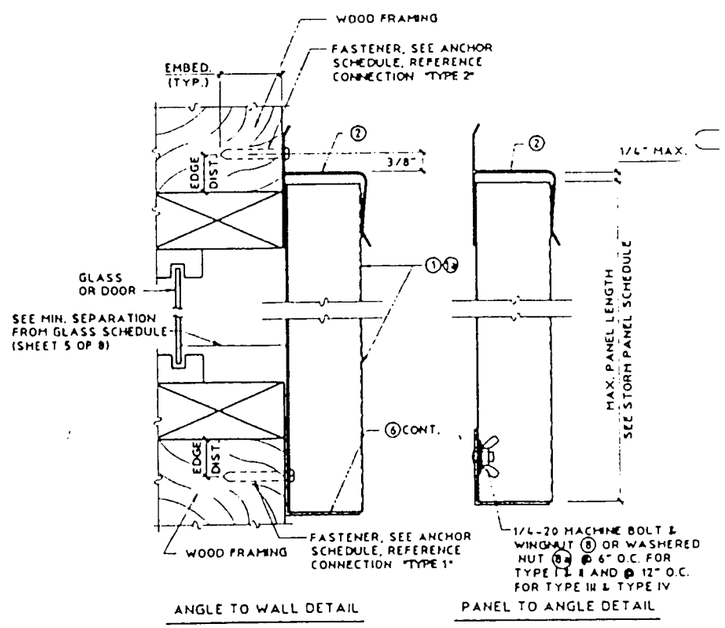

Ⓓ WALL MOUNT SECTION

SCALE : 3" = 1'-0"

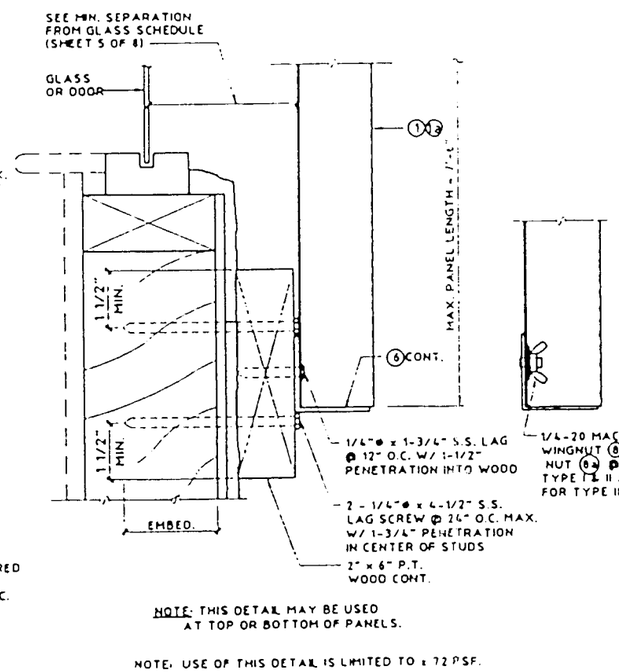

Ⓔ WALL MOUNT SECTION

SCALE : 3" = 1'-0"

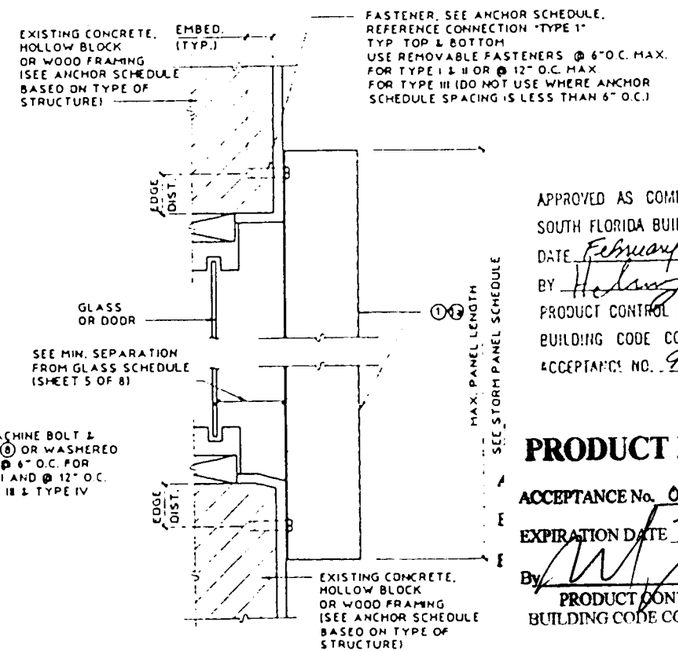

Ⓕ WALL MOUNT SECTION

(DIRECT MOUNT)

SCALE : 3" = 1'-0"

APPROVED AS COMPLYING WITH THE SOUTH FLORIDA BUILDING CODE

DATE February 11 19 99

BY Hedwig A. Meier

PRODUCT CONTROL DIVISION

BUILDING CODE COMPLIANCE OFFICE

ACCEPTANCE NO. 98-1021.03

PRODUCT RENEWED

ACCEPTANCE No. 01-1224.01

EXPIRATION DATE February 16, 2002

By

PRODUCT CONTROL DIVISION
BUILDING CODE COMPLIANCE OFFICE

KNEZEVICH & ASSOCIATES, INC.
CONSULTING ENGINEERS • PRODUCT TESTING
641 HOKENA DRIVE-MIAMI SPRINGS, FLORIDA 33166
MIAMI (305) 883-9571 FT. LAUDERDALE (954) 677-9500
FAX. (305) 883-9572

COPYRIGHT 1998 KNEZEVICH & ASSOCIATES, INC.

20 GA. STEEL STORM PANEL

HURRICANE SHUTTERS

QUALITY SERVICE SINCE 1957
MANUFACTURERS OF HURRICANE & SECURITY PROTECTION PRODUCTS
3750 N.W. 27th AVE.
MIAMI, FLORIDA 33142
PH. (305) 633-0050 • (800) 327-0050 FAX. (305) 634-8078

revisions			
no	date	by	description
1	09/30/98	VK	PREV. DRAWING # 95-331
2	01/06/99	VK	GENERAL REVISIONS

V.J. KNEZZYICH
PROFESSIONAL ENGINEER
FL License No. PE 0000963

JAN - 6 1999

date 09/30/98
scale AS NOTED
drawn by HC
design by VJK
checked by VJK
drawing no. 98-218
sheet 2 of 8

01/05/99 16:18

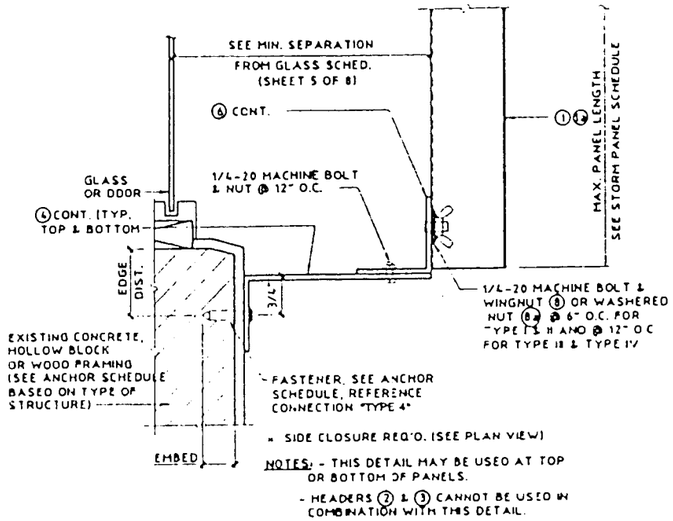

Ⓖ ALT. BUILD-OUT MOUNT SECTION

SCALE : 3" = 1'-0"

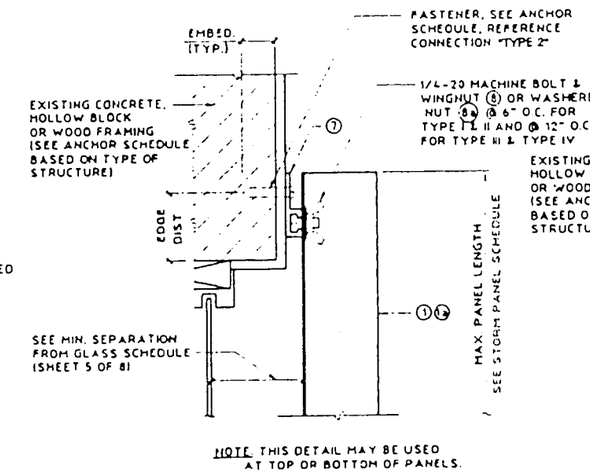

Ⓗ WALL MOUNT DETAIL

SCALE : 3" = 1'-0"

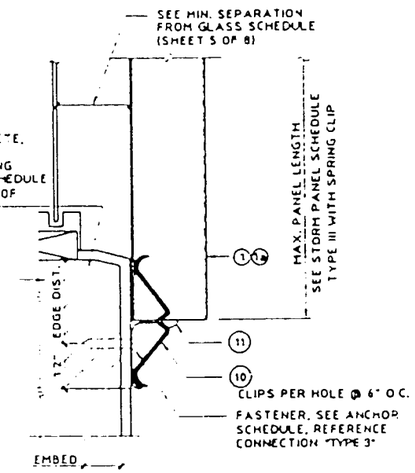

Ⓘ ALT. WALL MOUNT W/ SPRING CLIP (SILL ONLY)

SCALE: 3" = 1'-0"

NOTE: PANEL LENGTH SHALL BE LIMITED TO TABLE 1 TYPE III

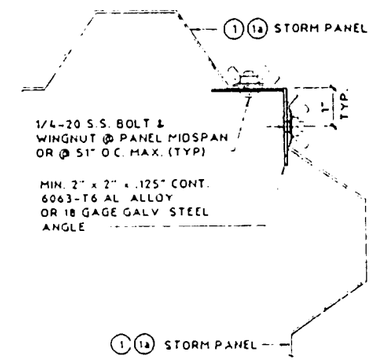

Ⓙ CORNER DETAIL

SCALE 3" = 1'-0"

PRODUCT RENEWED

ACCEPTANCE No. 01-1224.01

EXPIRATION DATE February 14, 2007

By

PRODUCT CONTROL DIVISION
BUILDING CODE COMPLIANCE OFFICE

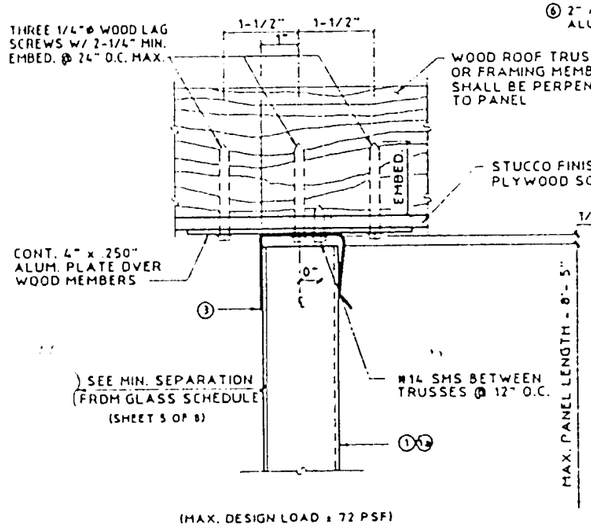

Ⓚ SOFFIT CONNECTION DETAIL

SCALE : 3" = 1'-0"

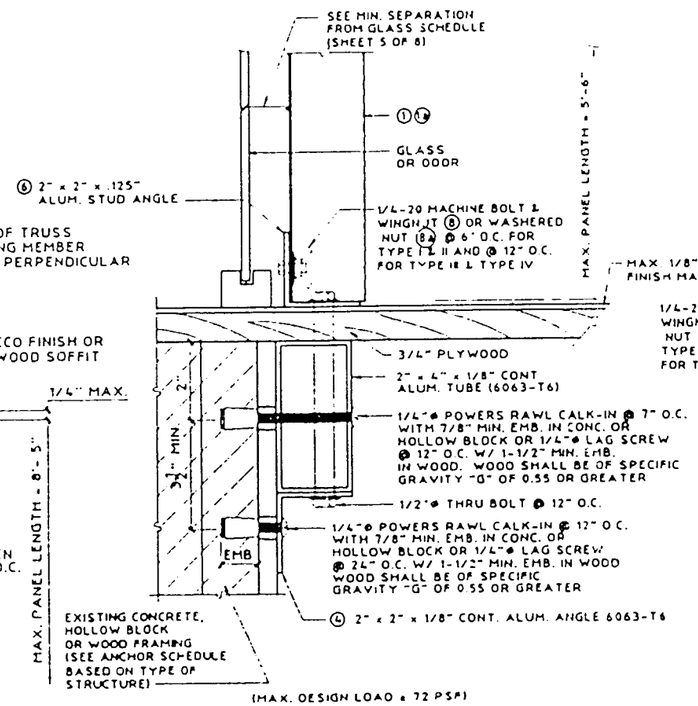

Ⓝ "PASS THRU" DETAIL

SCALE : 3" = 1'-0"

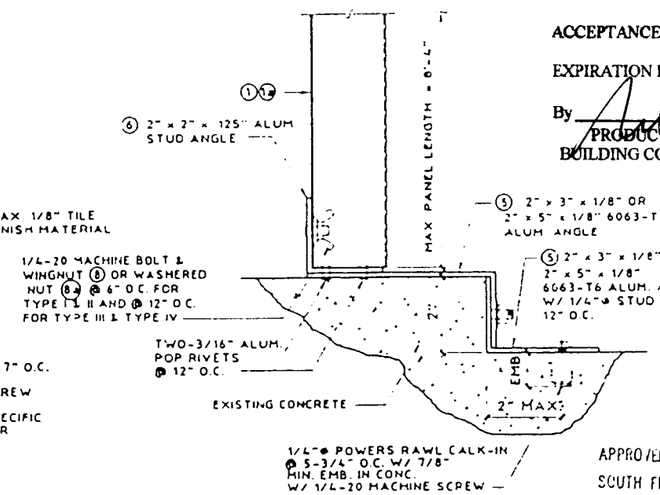

Ⓞ EDGE MOUNT DETAIL

SCALE : 3" = 1'-0"

APPROVED AS COMPLYING WITH THE
SOUTH FLORIDA BUILDING CODE
DATE February 11 1999
BY
PRODUCT CONTROL DIVISION
BUILDING CODE COMPLIANCE OFFICE
ACCEPTANCE NO. 98-1021.03

KNEZEVICH & ASSOCIATES, INC.
CONSULTING ENGINEERS • PRODUCT TESTING
641 MOKENA DRIVE • MIAMI SPRINGS, FLORIDA 33166
MIAMI (305) 883-9571 FT. LAUDERDALE (954) 677-9500
FAX (305) 883-9572

COPYRIGHT 1998 KNEZEVICH & ASSOCIATES, INC.

20 GA. STEEL STORM PANEL

HURRICANE PROTECTION PRODUCTS
MANUFACTURERS OF HURRICANE & SECURITY PROTECTION PRODUCTS
2795 N.W. 34th AVENUE
LAUDERDALE LAKES, FLORIDA 33311
TEL (305) 633-8400 (800) 327-4680 FAX (305) 633-8679
QUALITY SERVICE SINCE 1957

revisions			
no	date	by	description
1	09/30/98	MC	PREV. DRAWING # 95-331
2	01/06/99	MC	GENERAL REVISIONS

V.J. KNEZEVICH
PROFESSIONAL ENGINEER
FL License No. PE 0010903

JAN 7 6 1999

date 09/30/98	
scale AS NOTED	drawn by MC
design by VJK	checked by VJK

drawing no 98-218

sheet 3 of 8

01/05/99 16:18

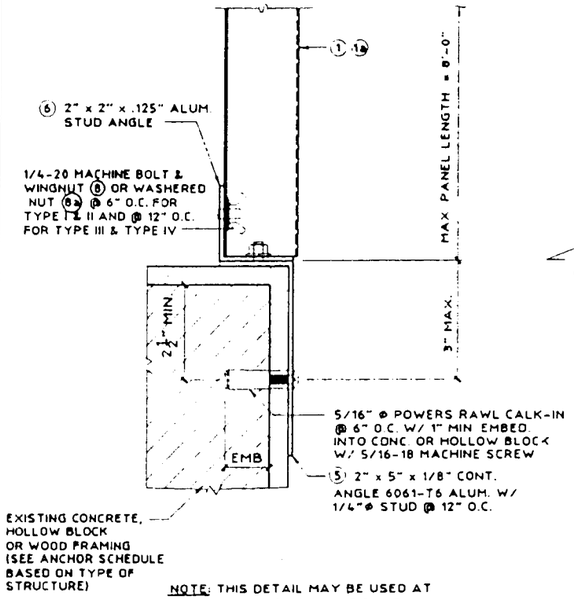

NOTE: THIS DETAIL MAY BE USED AT TOP OR BOTTOM OF PANEL.

(MAX. DESIGN LOAD ± 72 PSF)

(P) EDGE MOUNT DETAIL

SCALE : 3" = 1'-0"

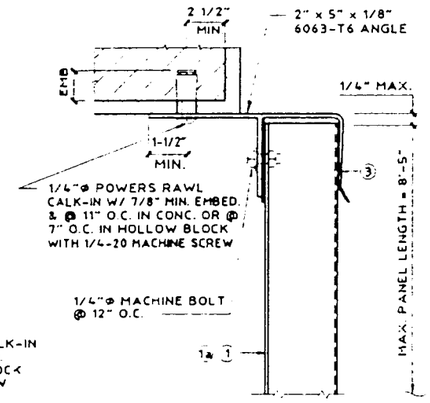

(MAX. DESIGN LOAD ± 72 PSF)

(S) ANGLE TO "U" HEADER BUILD-OUT

SCALE : 3" = 1'-0"

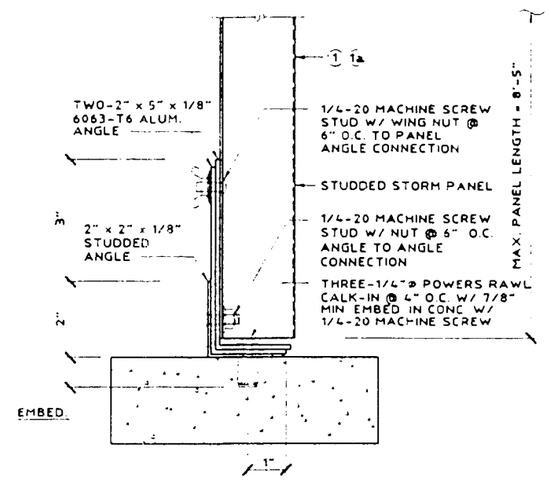

(MAX. DESIGN LOAD ± 72 PSF)

(T) ASSEMBLY MOUNT

SCALE : 3" = 1'-0"

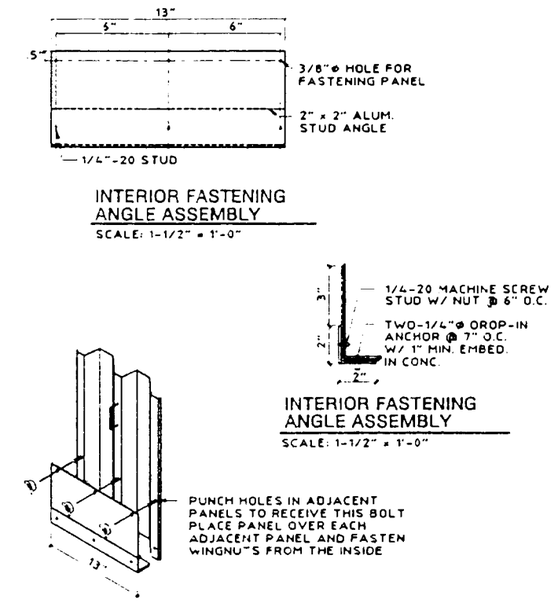

(U) STORM PANEL INTERIOR FASTENING DETAIL (USE WITH DETAIL (T))

SCALE: N.T.S.

PRODUCT RENEWED

ACCEPTANCE No. 01-1224.01

EXPIRATION DATE February 16, 2007

By

PRODUCT CONTROL DIVISION
BUILDING CODE COMPLIANCE OFFICE

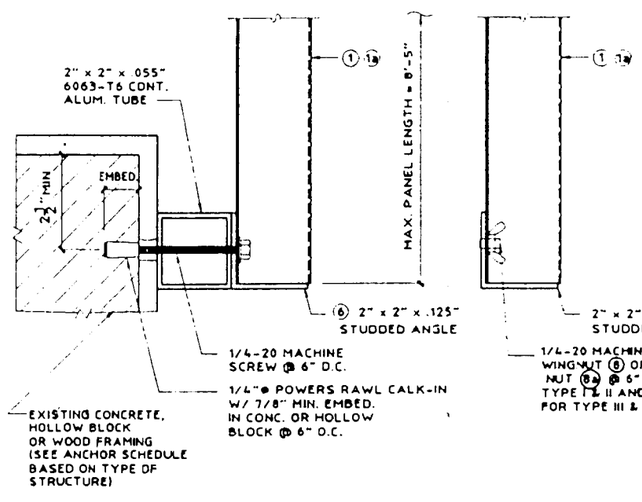

NOTE: THIS DETAIL MAY BE USED AT TOP OR BOTTOM OF PANEL.

(MAX. DESIGN LOAD ± 72 PSF)

(V) 2" x 2" ALUM. TUBE BUILD-OUT

SCALE : 3" = 1'-0"

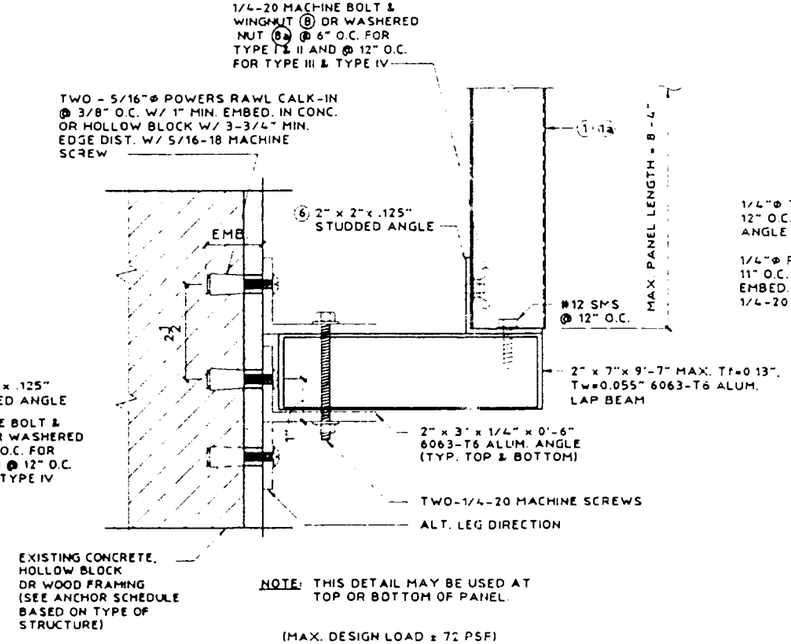

NOTE: THIS DETAIL MAY BE USED AT TOP OR BOTTOM OF PANEL.

(MAX. DESIGN LOAD ± 72 PSF)

(W) STORM PANEL SUPPORT BEAM

SCALE : 3" = 1'-0"

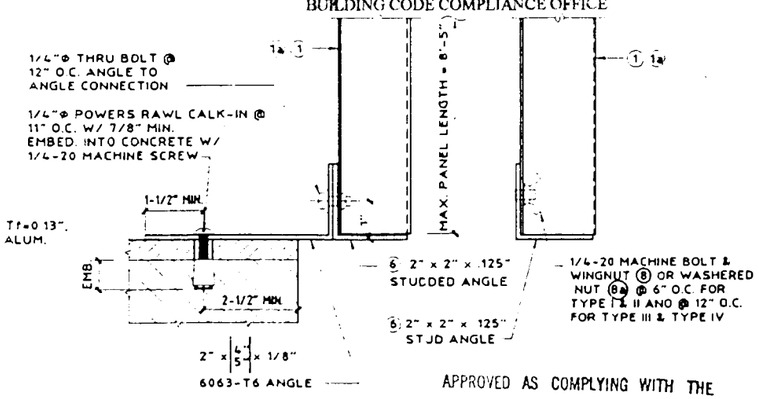

NOTE: THIS DETAIL MAY BE USED AT TOP OR BOTTOM OF PANEL.

(MAX. DESIGN LOAD ± 72 PSF)

APPROVED AS COMPLYING WITH THE SOUTH FLORIDA BUILDING CODE
DATE February 11 19 99
BY
PRODUCT CONTROL DIVISION
BUILDING CODE COMPLIANCE OFFICE
ACCEPTANCE NO. 98-1021.03

(X) STORM PANEL BUILD-OUT

SCALE : 3" = 1'-0"

KNEZEVICH & ASSOCIATES, INC.
CONSULTING ENGINEERS • PRODUCT TESTING
641 MOKENA DRIVE·MIAMI SPRINGS, FLORIDA 33166
MIAMI (305) 883-9571 FT. LAUDERDALE (954) 677-9500
FAX: (305) 883-9572

COPYRIGHT 1998 KNEZEVICH & ASSOCIATES, INC.

20 GA. STEEL STORM PANEL

HURRICANE PROTECTION PRODUCTS, INC.
QUALITY SERVICE SINCE 1957
MANUFACTURERS OF HURRICANE & SECURITY PROTECTION PRODUCTS
3705 NW 36th AVENUE
MIAMI, FLORIDA 33142
FL: (305) 633-0050 / (800) 327-0050 FAX: (305) 634-9078

revisions			
no	date	by	description
1	09/30/98	VK	PREV. DRAWING # 95-331
2	01/04/98	VK	GENERAL REVISIONS

V.J. KNEZEVICH
PROFESSIONAL ENGINEER
FL License No: PE 0010983

JAN - 6 1999

date 09/30/98	
scale AS NOTED	drawn by MC
design by VJK	checked by VJK

drawing no. 98-218

sheet 4 of 8

01/05/99 16:17

TABLE 1 - STORM PANEL (1) & (1a) SCHEDULE

NEGATIVE DESIGN LOAD W (PSF)	TYPE I	TYPE II	TYPE III	TYPE IV
	FOR MOUNTING CONDITIONS W/ "h" OR "U" HEADERS & SILLS USING STUDS, BOLTS OR DIRECT MOUNT @ 6" O.C. BOLTS OR BAR REQ'D. AT MIDSPAN OVERLAPS	FOR MOUNTING CONDITIONS W/ HEADERS & SILLS USING STUDS, BOLTS OR DIRECT MOUNT @ 6" O.C. BOLTS OR BAR REQ'D. AT MIDSPAN OVERLAPS	FOR MOUNTING CONDITIONS W/ "h" OR "U" HEADERS & SILLS USING STUDS, BOLTS OR DIRECT MOUNT @ 12" O.C. NO BOLTS OR BAR REQ'D. AT MIDSPAN OVERLAPS	FOR MOUNTING CONDITIONS W/ HEADERS & SILLS USING STUDS, BOLTS OR DIRECT MOUNT @ 12" O.C. NO BOLTS OR BAR REQ'D. AT MIDSPAN OVERLAPS
	L max. (FT-IN)	L max. (FT-IN)	L max. (FT-IN)	L max. (FT-IN)
40.0	8 - 8	12 - 0	8 - 8	11 - 6
45.0	8 - 8	12 - 0	8 - 8	10 - 10
50.0	8 - 8	11 - 9	8 - 8	10 - 3
55.0	8 - 8	11 - 2	8 - 8	9 - 9
60.0	8 - 8	10 - 9	8 - 8	9 - 4
62.0	8 - 8	10 - 6	8 - 8	9 - 3
65.0	8 - 8	10 - 4	8 - 8	9 - 0
70.0	8 - 6	9 - 11	8 - 8	8 - 8
72.0	8 - 4	9 - 9	8 - 7	8 - 7
75.0	8 - 0	9 - 7	8 - 4	8 - 4
80.0	7 - 6	9 - 3	8 - [illegible]	8 - 1
90.0	6 - 8	8 - 9	7 - 2	7 - 8
100.0	6 - 0	8 - 3	6 - 6	7 - 3
110.0	5 - 6	7 - 11	5 - 10	6 - 11
120.0	5 - 0	7 - 7	5 - 5	6 - 7
130.0	4 - 7	7 - 3	5 - 0	6 - 4
140.0	4 - 3	7 - 0	4 - 7	6 - 1
150.0	4 - 0	6 - 9	4 - 3	5 - 11
160.0	3 - 9	6 - 7	4 - 0	5 - 9
170.0	3 - 6	6 - 4	3 - 9	5 - 7
180.0	3 - 4	6 - 2	3 - 7	5 - 5
190.0	3 - 2	6 - 0	3 - 5	5 - 3
200.0	3 - 0	5 - 10	3 - 3	5 - 1
210.0	2 - 10	5 - 9	3 - [illegible]	4 - 9
220.0	2 - 9	5 - 7	2 - 1	4 - 6
230.0	2 - 7	5 - 4	2 - 9	4 - 4

NOTES:

1. ENTER TABLE 1 WITH NEGATIVE DESIGN LOAD TO DETERMINE MAXIMUM PANEL LENGTH.
2. REFERENCE APPROPRIATE COLUMN IN STORM PANEL SCHEDULE BASED ON MOUNTING CONDITIONS IN FIELD.
3. SEE NOTE No. 12 ON PAGE 1 OF 8.

TABLE 2 - MIN. STORM PANEL SEPARATION FROM GLASS SCHEDULE

POSITIVE DESIGN LOAD W (PSF)	ACTUAL SHUTTER SPAN (L) (FT - IN)	MINIMUM SEPARATION FOR INSTALLATIONS 30' OR LESS ABOVE GRADE (INCHES)		MINIMUM SEPARATION FOR INSTALLATIONS GREATER THAN 30' ABOVE GRADE (INCHES)
		BAR	NO BAR	NO BAR
40.0	5 - 0	2	2-1/2	1-1/4
	8 - 5	2	2-1/2	1-1/2
	12 - 0	N/A	3-1/4	2-1/2
50.0	5 - 0	2	2-1/2	1-1/4
	8 - 5	2	2-1/2	1-5/8
	11 - 9	N/A	3-1/4	2-3/4
60.0	5 - 0	2	2-1/2	1-1/4
	8 - 5	2	2-1/2	1-5/8
	10 - 9	N/A	3-1/4	2-1/2
70.0	5 - 0	2	2-1/2	1-1/4
	8 - 5	2	2-1/2	1-3/4
	9 - 11	N/A	3-1/4	2-1/4
80.0	5 - 0	2	2-1/2	1-1/4
	8 - 5	2	2-1/2	1-7/8
	9 - 3	N/A	3-1/4	2-1/8
90.0	5 - 0	2	2-1/2	1-1/4
	8 - 5	2	2-1/2	1-3/8
	8 - 9	N/A	3-1/4	2
100.0	4 - 0	2	2-1/2	1-1/4
	6 - 0	2	2-1/2	1-3/8
	8 - 3	2	2-1/2	2
110.0	4 - 0	2	2-1/2	1-1/4
	6 - 0	2	2-1/2	1-3/8
	7 - 11	2	2-1/2	1-7/8
120.0	4 - 0	2	2-1/2	1-1/4
	6 - 0	2	2-1/2	1-3/8
	7 - 7	2	2-1/2	1-7/8

NOTES:

1. ENTER TABLE 2 WITH POSITIVE DESIGN LOAD TO DETERMINE MINIMUM SEPARATION FRON GLASS.
2. FOR DESIGN LOADS BETWEEN TABULATED VALUES USE NEXT HIGHER LOAD OR LINEAR INTERPOLATION MAY BE USED TO DETERMINE ALLOWABLE PANEL LENGTH.
3. " N/A " DESIGNATES NOT APPLICABLE - MUST MEET "NO BAR" REQUIREMENTS.

PRODUCT RENEWED

ACCEPTANCE No. 91-1224.01

EXPIRATION DATE February 16, 2007

By _____

PRODUCT CONTROL DIVISION
BUILDING CODE COMPLIANCE OFFICE

APPROVED AS COMPLYING WITH THE SOUTH FLORIDA BUILDING CODE

DATE February 11 1999

BY _____

PRODUCT CONTROL DIVISION
BUILDING CODE COMPLIANCE OFFICE

ACCEPTANCE No. 98-1021.03

KNEZEVICH & ASSOCIATES, INC.
CONSULTING ENGINEERS • PRODUCT TESTING
641 MOKENA DRIVE · MIAMI SPRINGS, FLORIDA 33166
MIAMI (305) 883-9571 FT. LAUDERDALE (954) 677-9500
FAX: (305) 883-9572

COPYRIGHT 1998 KNEZEVICH & ASSOCIATES, INC.

20 GA. STEEL STORM PANEL

HURST
MANUFACTURERS OF HURRICANE & SECURITY PROTECTION PRODUCTS
5795 NW 36th AVENUE
MIAMI, FLORIDA 33142
"QUALITY SERVICE SINCE 1957"
FFL (305) 633-5000 / (800) 327-6900 FAX: (305) 634-8078

revisions			
no	date	by	description
1	09/30/98	VJK	PREV. DRAWING # 95-331
2	01/01/99	VJK	GENERAL REVISIONS

V.J. KNEZEVICH
PROFESSIONAL ENGINEER
FL License No: PE 0010983

JAN - 6 1999

date 09/30/98
scale AS NOTED
drawn by MC
design by VJK
checked by VJK
drawing no. 98-218
sheet 5 of 8

ANCHOR SCHEDULE

FASTENER MAXIMUM SPACING (INCHES) REQUIRED FOR VARIOUS DESIGN LOADS AND SPANS

EXISTING STRUCTURE	ANCHOR TYPE	LOAD (W) PSF MAX. (SEE NOTE 1)	3/4" EDGE DISTANCE														
			SPANS UP TO 5'-0" (SEE NOTE 1)					SPANS UP TO 8'-5" (SEE NOTE 1)					SPANS UP TO 12'-0" (SEE NOTE 1)				
			CONNECTION TYPE					CONNECTION TYPE					CONNECTION TYPE				
			1	2	3	4	5	1	2	3	4	5	1	2	3	4	5
WOOD	1/4"Φ WOOD LAG SCREW W/ 1-3/4" THREAD PENETRATION (SHEAR PARALLEL TO GRAIN)	48.0	12.5	12.5	12.5	12.5	12.5	12.5	11	12.5	12.5	9	12.5	6	12.5	12.5	6
		62.0	12.5	12.5	12.5	12.5	11	12.5	7	12.5	12.5	7	12.5	4	12.5	10	4
		72.0	12.5	12.5	12.5	12.5	10	12.5	5	12.5	12.5	6	12.5	3	9	7	4
		92.0	12.5	9	12.5	12.5	7	12.5	4	12	9	4	12		5	4	3
		230.0	11		5	4	3	10		4	3		10		4	3	
	1/4"Φ WOOD LAG SCREW W/ 1-3/4" THREAD PENETRATION (SHEAR PARALLEL TO GRAIN)	48.0	12.5	12.5	12.5	12.5	12	12.5	11	12.5	12.5	7	12.5	6	12.5	12.5	5
		62.0	12.5	12.5	12.5	12.5	9	12.5	7	12.5	12.5	5	12.5	4	12.5	10	3
		72.0	12.5	12.5	12.5	12.5	8	12.5	5	12.5	12.5	4	12.5	3	9	7	3
		92.0	12.5	9	12.5	12.5	6	12.5	4	12	9	3	12		5	4	
		230.0	11		5	4		10		4	4		10		4	3	
	★ ★ 1/4"Φ ELCO MALE/ FEMALE "PANELMATE" W/ 1-7/8 MIN. EMBEDMENT & 1/4-20 MACHINE SCREW WITH NUT	48.0	12.5	12.5	12.5	12.5	12.5	12.5	12	12.5	12.5	12	12.5	7	12.5	12.5	8
		62.0	12.5	12.5	12.5	12.5	12.5	12.5	8	12.5	12.5	9	12.5	5	12.5	11	6
		72.0	12.5	12.5	12.5	12.5	12.5	12.5	6	12.5	12.5	8	12.5	4	10	8	5
		92.0	12.5	10	12.5	12.5	10	12.5	4	12.5	10	6	12.5	3	6	5	4
		230.0	12		5	4	4	12		5	4	4	12		5	4	4
	★ 5/16"Φ BRASS WOOD BUSHING W/ 7/8" EMBED. AND 3/4" MIN. EDGE DISTANCE	48.0	12.5	12.5	12.5	12.5	7	9	3	9	9	4	6		6	6	3
		62.0	12	5	12	12	5	7		7	7	3	5		4		
		72.0	10	4	10	10	4	6		6	5		4				
		92.0	8		8	8	3	4		3			3				
		230.0	3					3					3				

ANCHOR NOTES:

1. SPANS & LOADS SHOWN HERE ARE FOR DETERMINING ANCHOR SPACING ONLY. ALLOWABLE SHUTTER SPANS FOR SPECIFIC LOADS MUST BE LIMITED TO THOSE SHOWN IN TABLE 1, SHEET 5
2. ENTER TABLE BASED ON THE EXISTING STRUCTURE MATERIAL, ANCHOR TYPE AND EDGE DISTANCE. SELECT DESIGN LOAD GREATER THAN OR EQUAL TO NEGATIVE DESIGN LOAD ON SHUTTER AND SELECT SPAN GREATER THAN OR EQUAL TO SHUTTER SPAN.
3. EXISTING STRUCTURE MAY BE CONCRETE, HOLLOW BLOCK OR WOOD FRAMING. REFERENCE ANCHOR SCHEDULE FOR PROPER ANCHOR TYPE BASED ON TYPE OF EXISTING STRUCTURE AND APPROPRIATE CONNECTION TYPE. SEE CONNECTION DETAILS FOR IDENTIFICATION OF CONNECTION TYPE.
4. ANCHORS SHALL BE INSTALLED IN ACCORDANCE WITH MANUFACTURERS' RECOMMENDATIONS.
5. MINIMUM EMBEDMENT AND EDGE DISTANCE EXCLUDES WALL FINISH OR STUCCO.
6. WHERE EXISTING STRUCTURE IS WOOD FRAMING, WOOD FRAMING CONDITIONS VARY. FIELD VERIFY THAT FASTENERS ARE INTO ADEQUATE WOOD FRAMING MEMBERS, NOT PLYWOOD.
7. WHERE LAG SCREWS FASTEN TO NARROW FACE OF STUD FRAMING, FASTENER SHALL BE LOCATED IN CENTER OF NOMINAL 2"x4" (MIN.) WOOD STUD. 3/4" EDGE DISTANCE IS ACCEPTABLE FOR WOOD FRAMING. WOOD STUD SHALL BE "SOUTHERN PINE" G=0.55 OR GREATER DENSITY. LAG SCREWS SHALL HAVE PHILLIPS PAN HEAD OR HEX HEAD.
8. MACHINE SCREWS SHALL HAVE MINIMUM OF 1/2" ENGAGEMENT OF THREADS IN BASE ANCHOR AND MAY HAVE EITHER A PAN HEAD, TRUSS HEAD, OR WAFER HEAD (SIDEWALK BOLT), U.O.N.
9. ☐ DESIGNATES ANCHOR CONDITIONS WHICH ARE NOT ACCEPTABLE USES.

★ DESIGNATES ANCHORS WHICH ARE REMOVABLE BY REMOVING WASHERED WINGNUT, NUT, OR MACHINE SCREW

PRODUCT RENEWED

ACCEPTANCE No. 01-1224.01

EXPIRATION DATE February 16, 2007

By

PRODUCT CONTROL DIVISION
BUILDING CODE COMPLIANCE OFFICE

APPROVED AS COMPLYING WITH THE SOUTH FLORIDA BUILDING CODE

DATE February 11, 1999

BY

PRODUCT CONTROL DIVISION

BUILDING CODE COMPLIANCE OFFICE

COMPLIANCE NO. 98-1025.03

KNEZEVICH & ASSOCIATES, INC.
CONSULTING ENGINEERS • PRODUCT TESTING
641 MOKENA DRIVE-MIAMI SPRINGS, FLORIDA 33166
MIAMI (305) 883-9571 FT. LAUDERDALE (954) 677-9500
FAX. (305) 883-9572

COPYRIGHT 1998 KNEZEVICH & ASSOCIATES, INC.

20 GA. STEEL STORM PANEL

HURST

MANUFACTURER OF RETRACTABLE & SECURITY SHUTTER PRODUCTS

revisions

no.	date	by	description
1	09/30/98	VJK	PREV. DRAWING # 95-331
2	01/06/98	VJK	GENERAL REVISIONS

V.J. KNEZEVICH
PROFESSIONAL ENGINEER
FL License No. PE 0070963

JAN - 6 1999

date 09/30/98

scale AS NOTED | drawn by HC

design by VJK | checked by VJK

drawing no. 98-218

sheet 6 of 8

01/05/99 16:18

ANCHOR SCHEDULE

FASTENER MAXIMUM SPACING (INCHES) REQUIRED FOR VARIOUS DESIGN LOADS AND SPANS

EXISTING STRUCTURE	ANCHOR TYPE	LOAD (W) PSF MAX. (SEE NOTE 1)	2" EDGE DISTANCE															3" EDGE DISTANCE														
			SPANS UP TO 5'-0" (SEE NOTE 1)					SPANS UP TO 8'-5" (SEE NOTE 1)					SPANS UP TO 12'-0" (SEE NOTE 1)					SPANS UP TO 5'-0" (SEE NOTE 1)					SPANS UP TO 8'-5" (SEE NOTE 1)					SPANS UP TO 12'-0" (SEE NOTE 1)				
			CONNECTION TYPE					CONNECTION TYPE					CONNECTION TYPE					CONNECTION TYPE					CONNECTION TYPE					CONNECTION TYPE				
			1	2	3	4	5	1	2	3	4	5	1	2	3	4	5	1	2	3	4	5	1	2	3	4	5	1	2	3	4	5
CONCRETE	1/4"Φ ITW TAPCON W/ 1-1/4" MIN. EMBEDMENT (MIN. 3,100 P.S.I. CONCRETE)	48.0	12.5	12.5	12.5	12.5	12.5	12.5	7	12.5	12.5	9	12.5	3	12.5	12.5	6	12.5	12.5	12.5	12.5	12.5	12.5	7	12.5	12.5	11	12.5	4	12.5	12.5	8
		62.0	12.5	12	12.5	12.5	12	12.5	4	12.5	12.5	7	10		8	6	5	12.5	12.5	12.5	12.5	12.5	12.5	5	12.5	12.5	8	12	3	9	7	6
		72.0	12.5	8	12.5	12.5	10	12.5	3	12.5	12	6	9		5	4	4	12.5	9	12.5	12.5	12	12.5	4	12.5	12.5	7	10		6	5	5
		92.0	12.5	5	12.5	12.5	8	10		7	5	4	7		3		3	12.5	6	12.5	12.5	10	11		8	6	5	8		3	3	4
		230.0	7		3		3	6				3	6				3	7		3		4	7		3		3	7		3		3
	★ 1/4"Φ ELCO MALE/ FEMALE "PANELMATE" W/ 1-1/4 MIN. EMBEDMENT & 1/4-20 MACHINE SCREW WITH NUT (MIN. 3,000 P.S.I. CONCRETE)	48.0	12.5	12.5	12.5	12.5	11	12.5	5	12.5	12.5	7	11	3	11	11	4	12.5	12.5	12.5	12.5	12.5	12.5	5	12.5	12.5	8	11	3	11	11	5
		62.0	12.5	9	12.5	12.5	9	12	3	12	12	5	8		6	5	3	12.5	10	12.5	12.5	10	12	3	12	12	6	8		7	5	4
		72.0	12.5	7	12.5	12.5	7	10		10	9	4	7		4	3	3	12.5	7	12.5	12.5	9	10	3	10	9	5	7		4	3	3
		92.0	12.5	4	12.5	12.5	6	8		6	4	3	5					12.5	4	12.5	12.5	7	8		6	4	4	6				
		230.0	5					5					5					5					5					5				
	★ 1/4"Φ POWERS RAWL CALK-IN W/ 7/8" EMBEDMENT & 1/4-20 STAINLESS STEEL MACHINE SCREW (MIN. 3,000 P.S.I. CONCRETE)	48.0	12.5	12.5	12.5	12.5	12.5	12.5	11	12.5	12.5	10	12.5	6	12.5	12.5	7	12.5	12.5	12.5	12.5	12.5	12.5	12.5	12.5	12.5	12.5	12.5	8	12.5	12.5	11
		62.0	12.5	12.5	12.5	12.5	12.5	12.5	7	12.5	12.5	8	12.5	4	12.5	10	5	12.5	12.5	12.5	12.5	12.5	12.5	9	12.5	12.5	12.5	12.5	5	12.5	12.5	9
		72.0	12.5	12.5	12.5	12.5	11	12.5	6	12.5	12.5	7	12.5	3	9	7	4	12.5	12.5	12.5	12.5	12.5	12.5	7	12.5	12.5	11	12.5	4	11	9	7
		92.0	12.5	9	12.5	12.5	9	12.5	4	12	9	5	12		5	4	3	12.5	11	12.5	12.5	12.5	12.5	5	12.5	11	8	12.5	3	7	5	6
		230.0	11		5	4	3	10		4	3	3	10		4	3	3	12.5	3	6	5	5	12.5	3	5	4	5	12.5	3	5	4	5
	1/4"Φ POWERS RAWL ZAMAC NAIL-IN W/ 1-1/8" MIN. EMBEDMENT (MIN. 3,000 P.S.I. CONCRETE)	48.0	12.5	12.5	12.5	12.5	12.5	12.5	5	12.5	12.5	7	11	3	11	11	5	12.5	12.5	12.5	12.5	12.5	12.5	6	12.5	12.5	9	12	3	12	12	6
		62.0	12.5	10	12.5	12.5	10	12	3	12	12	6	8		7	5	4	12.5	11	12.5	12.5	12	12.5	4	12.5	12.5	7	9		7	5	5
		72.0	12.5	7	12.5	12.5	8	10		10	9	5	7		4	3	3	12.5	8	12.5	12.5	10	12	3	12	11	6	8		5	4	4
		92.0	12.5	4	12.5	12.5	6	8		6	4	4	5					12.5	5	12.5	12.5	8	9		6	5	5	6		3		3
		230.0	5					5					5					6				3	6				3	6				3
	1/4"Φ ITW RED HEAD DYNABOLT SLEEVE ANCHOR W/1-1/8" MIN. EMBED. (MIN. 2,100 P.S.I. CONCRETE)	48.0	12.5	12.5	12.5	12.5	12.5	12.5	7	12.5	12.5	8	12.5	4	12.5	12.5	5	12.5	12.5	12.5	12.5	12.5	12.5	9	12.5	12.5	12	12.5	5	12.5	12.5	8
		62.0	12.5	12.5	12.5	12.5	10	12.5	4	12.5	12.5	6	11		9	6	4	12.5	12.5	12.5	12.5	12.5	12.5	6	12.5	12.5	9	12.5	3	11	8	6
		72.0	12.5	9	12.5	12.5	9	12.5	3	12.5	12	5	9		6	4	3	12.5	11	12.5	12.5	12.5	12.5	4	12.5	12.5	8	12	3	7	5	5
		92.0	12.5	5	12.5	12.5	7	11		8	6	4	7		3	3	3	12.5	7	12.5	12.5	11	12.5	3	10	7	6	9		4	3	4
		230.0	7		3			7		3			7		3			9		4	3	4	8		3	3	4	8		3	3	4
	1/4"Φ POWERS RAWL DROP-IN & 1/4-20 SIDEWALK BOLT (3/4"Φ HEAD) W/ 1-1/4" MIN. EMBEDMENT (MIN. 2,000 P.S.I. CONCRETE)	48.0	12.5	12.5	12.5	12.5	12.5	12.5	10	12.5	12.5	10	12.5	6	12.5	12.5	7	12.5	12.5	12.5	12.5	12.5	12.5	12.5	12.5	12.5	12.5	12.5	7	12.5	12.5	11
		62.0	12.5	12.5	12.5	12.5	12.5	12.5	7	12.5	12.5	7	12.5	4	12.5	9	5	12.5	12.5	12.5	12.5	12.5	12.5	8	12.5	12.5	12	12.5	5	12.5	12	8
		72.0	12.5	12.5	12.5	12.5	11	12.5	5	12.5	12.5	6	12.5	3	8	6	4	12.5	12.5	12.5	12.5	12.5	12.5	7	12.5	12.5	10	12.5	4	11	8	7
		92.0	12.5	8	12.5	12.5	8	12.5	4	11	8	5	11		5	4	3	12.5	10	12.5	12.5	12.5	12.5	5	12.5	11	8	12.5	3	6	5	5
		230.0	10		4	4	3	10		4	3	3	10		4	3	3	12.5	3	6	5	5	12		5	4	5	12		5	4	5

SEE PAGE 6 FOR ANCHOR NOTES

PRODUCT RENEWED

ACCEPTANCE No. 01-1224.01

EXPIRATION DATE February 16, 2007

By

PRODUCT CONTROL DIVISION
BUILDING CODE COMPLIANCE OFFICE

APPROVED AS COMPLYING WITH THE SOUTH FLORIDA BUILDING CODE

DATE February 11, 19 99

BY

PRODUCT CONTROL DIVISION
BUILDING CODE COMPLIANCE OFFICE

ACCEPTANCE NO. 98-1021.03

KNEZEVICH & ASSOCIATES, INC.
CONSULTING ENGINEERS • PRODUCT TESTING
641 MOKENA DRIVE • MIAMI SPRINGS, FLORIDA 33166
MIAMI (305) 883-9571 FT. LAUDERDALE (954) 677-9500
FAX: (305) 883-9572

COPYRIGHT 1998 KNEZEVICH & ASSOCIATES, INC.

20 GA. STEEL STORM PANEL

FLORIDA PRODUCT

QUALITY SERVICE SINCE 1957
MANUFACTURERS OF HURRICANE & SECURITY PROTECTION PRODUCTS
2795 NW 34th AVENUE
MIAMI, FLORIDA 33142
PH. (305) 633-0064 / (800) 327-8060 FAX (305) 634-9078

revisions

no.	date	by	description
1	09/30/98	VJK	PREV. DRAWING # 95-331
2	01/04/98	VJK	GENERAL REVISIONS

V.J. KNEZEVICH
PROFESSIONAL ENGINEER
FL License No. PE 0017983

JAN - 6 1999

date 09/30/98
scale AS NOTED
drawn by MC
design by VJK
checked by VJK
drawing no. 98-218
sheet 7 of 8

01/05/99 16:18

ANCHOR SCHEDULE

FASTENER MAXIMUM SPACING (INCHES) REQUIRED FOR VARIOUS DESIGN LOADS AND SPANS

EXISTING STRUCTURE	ANCHOR TYPE	LOAD (W) PSF MAX. (SEE NOTE 1)	2" EDGE DISTANCE															3" EDGE DISTANCE														
			SPANS UP TO 5'-0" (SEE NOTE 1)					SPANS UP TO 8'-5" (SEE NOTE 1)					SPANS UP TO 12'-0" (SEE NOTE 1)					SPANS UP TO 5'-0" (SEE NOTE 1)					SPANS UP TO 8'-5" (SEE NOTE 1)					SPANS UP TO 12'-0" (SEE NOTE 1)				
			CONNECTION TYPE					CONNECTION TYPE					CONNECTION TYPE					CONNECTION TYPE					CONNECTION TYPE					CONNECTION TYPE				
			1	2	3	4	5	1	2	3	4	5	1	2	3	4	5	1	2	3	4	5	1	2	3	4	5	1	2	3	4	5
HOLLOW CONCRETE BLOCK	1/4"Φ ITW TAPCON W/ 1-1/4" MIN. EMBEDMENT	48.0	12.5	12.5	12.5	12.5	9	10	3	10	10	5	7		7	7	3	12.5	12.5	12.5	12.5	11	12	4	12	12	6	8		8	8	4
		62.0	12.5	6	12.5	12.5	7	8		8	8	4	5		4	3		12.5	7	12.5	12.5	8	9		9	9	5	6		5	3	3
		72.0	12	4	12	12	6	7		7	6	3	5		3			12.5	5	12.5	12.5	7	8		8	7	4	5		3		3
		92.0	9	3	9	9	4	5		4	3		3					10	3	10	10	5	6		4	3	3	4				
		230.0	3					3					3					4					4					4				
	1/4"Φ ELCO MALE/ FEMALE "PANELMATE" W/ 1-1/4 MIN. EMBEDMENT & 1/4-20 MACHINE SCREW WITH NUT	48.0	12.5	12.5	12.5	12.5	11	12.5	5	12.5	12.5	7	11	3	11	11	4	12.5	12.5	12.5	12.5	12.5	12.5	5	12.5	12.5	8	11	3	11	11	5
		62.0	12.5	9	12.5	12.5	9	12	3	12	12	5	8		6	5	3	12.5	10	12.5	12.5	10	12	3	12	12	6	8		7	5	4
		72.0	12.5	7	12.5	12.5	7	10		10	9	4	7		4	3	3	12.5	7	12.5	12.5	9	10	3	10	9	5	7		4	3	3
		92.0	12.5	4	12.5	12.5	6	8		6	4	3	6					12.5	4	12.5	12.5	7	8		6	4	4	6				
		230.0	5					5					5					5					5					5				
	1/4"Φ POWERS RAWL CALK-IN W/ 7/8" EMBEDMENT & 1/4-20 STAINLESS STEEL MACHINE SCREW	48.0	12.5	12.5	12.5	12.5	10	12.5	4	12.5	12.5	6	9		9	9	4	12.5	12.5	12.5	12.5	12.5	12.5	6	12.5	12.5	9	12	3	12	12	6
		62.0	12.5	8	12.5	12.5	7	10	3	10	10	4	7		5	4	3	12.5	10	12.5	12.5	11	12.5	3	12.5	12.5	7	9		7	5	4
		72.0	12.5	6	12.5	12.5	6	9		9	8	4	6		3	3		12.5	7	12.5	12.5	10	11	3	11	10	6	8		4	3	4
		92.0	12	3	12	10	5	7		5	3	3	5					12.5	4	12.5	12.5	8	9		6	4	4	6				3
		230.0	4					4					4					6				3	5				3	5				3
	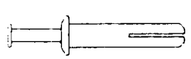 1/4"Φ POWERS RAWL ZAMAC NAIL-IN W/ 1-1/8" MIN. EMBEDMENT	48.0	12.5	12.5	12.5	12.5	9	10	3	10	10	5	7		7	7	4	12.5	12.5	12.5	12.5	11	11	4	11	11	6	8		8	8	4
		62.0	12.5	6	12.5	12.5	7	8		8	8	4	5		4	3	3	12.5	7	12.5	12.5	8	9		9	9	5	6		5	3	3
		72.0	11	4	11	11	6	6		6	6	3	4					12.5	5	12.5	12.5	7	7		7	7	4	5		3		3
		92.0	9		9	9	5	5		3			3					10	3	10	10	6	6		4	3	3	4				
		230.0	3					3					3					4					3					3				
	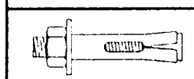 1/4"Φ ITW RED HEAD DYNABOLT SLEEVE ANCHOR W/1-1/8" MIN. EMBED.	48.0	12.5	12	12.5	12.5	7	8	3	8	8	4	6		6	6	3	12.5	12.5	12.5	12.5	11	11	3	11	11	6	7		7	7	4
		62.0	11	5	11	11	6	6		6	6	3	4		3			12.5	6	12.5	12.5	8	8		8	8	5	6		4	3	3
		72.0	9	3	9	9	5	5		5	5	3	4					12	4	12	12	7	7		7	6	4	5		3		3
		92.0	7		7	7	4	4		3			3					9	3	9	9	5	5		4	3	3	4				
		230.0	3															3					3					3				
	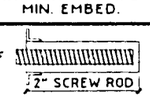 1/4-20 ITW EPCON EPOXY ANCHOR W/ S.S. MACHINE SCREW W/ 2" MIN. EMBED.	48.0'	12.5	12.5	12.5	12.5	12.5	12.5	10	12.5	12.5	12.5	12.5	6	12.5	12.5	10	12.5	12.5	12.5	12.5	12.5	12.5	10	12.5	12.5	12.5	12.5	6	12.5	12.5	10
		62.0	12.5	12.5	12.5	12.5	12.5	12.5	7	12.5	12.5	11	12.5	4	12.5	9	8	12.5	12.5	12.5	12.5	12.5	12.5	7	12.5	12.5	11	12.5	4	12.5	9	8
		72.0	12.5	12.5	12.5	12.5	12.5	12.5	5	12.5	12.5	9	12.5	3	8	6	6	12.5	12.5	12.5	12.5	12.5	12.5	5	12.5	12.5	9	12.5	3	8	6	6
		92.0	12.5	8	12.5	12.5	12.5	12.5	3	11	8	7	11		5	4	5	12.5	8	12.5	12.5	12.5	12.5	3	11	8	7	11		5	4	5
		230.0	10		4	4	5	10		4	3	4	10		4	3	4	10		4	4	5	10		4	3	4	10		4	3	4

SEE PAGE 6 FOR ANCHOR NOTES

PRODUCT RENEWED

ACCEPTANCE No. 01-1224.01

EXPIRATION DATE February 16, 2007

By

PRODUCT CONTROL DIVISION
BUILDING CODE COMPLIANCE OFFICE

APPROVED AS COMPLYING WITH THE SOUTH FLORIDA BUILDING CODE

DATE February 11 19 99

BY

PRODUCT CONTROL DIVISION
BUILDING CODE COMPLIANCE OFFICE

ACCEPTANCE NO. 98-1028.03

KNEZEVICH & ASSOCIATES, INC.
CONSULTING ENGINEERS • PRODUCT TESTING
641 MOKENA DRIVE-MIAMI SPRINGS, FLORIDA 33166
MIAMI (305) 883-9571 FT. LAUDERDALE (954) 677-9500
FAX. (305) 883-9572

COPYRIGHT 1998 KNEZEVICH & ASSOCIATES, INC.

20 GA. STEEL STORM PANEL

HURST

MANUFACTURERS OF REFRIGERATOR & FREEZER DOOR PRODUCTS
SUCCESSOR TO HURST ENGINEERING COMPANY, INC.
3792 NW 36th AVENUE
MIAMI, FLORIDA 33142
PH. (305) 633-9600 / (800) 327-0905 FAX. (305) 634-8078

QUALITY SERVICE SINCE 1957

revisions			
no	date	by	description
1	09/30/98	VJK	PREV. DRAWING # 95-331
2	01/06/98	VJK	GENERAL REVISIONS

V.J. KNEZEVICH
PROFESSIONAL ENGINEER
FL License No. PE 0070983

JAN 6 1999

date 09/30/98	
scale AS NOTED	drawn by HC
design by VJK	checked by VJK

drawing no. 98-218

sheet 8 of 8