MIAMI-DADE

BUILDING CODE COMPLIANCE OFFICE (BCCO)
PRODUCT CONTROL DIVISION

MIAMI-DADE COUNTY, FLORIDA
METRO-DADE FLAGLER BUILDING
140 WEST FLAGLER STREET, SUITE 1603
MIAMI, FLORIDA 33130-1563
(305) 375-2901 FAX (305) 375-2908

NOTICE OF ACCEPTANCE (NOA)

Jeld-Wen, Inc.
31725 Highway 97 N.
Chiloquin, OR 97624

SCOPE:

This NOA is being issued under the applicable rules and regulations governing the use of construction materials. The documentation submitted has been reviewed by Miami-Dade County Product Control Division and accepted by the Board of Rules and Appeals (BORA) to be used in Miami Dade County and other areas where allowed by the Authority Having Jurisdiction (AHJ).

This NOA shall not be valid after the expiration date stated below. The Miami-Dade County Product Control Division (In Miami Dade County) and/or the AHJ (in areas other than Miami Dade County) reserve the right to have this product or material tested for quality assurance purposes. If this product or material fails to perform in the accepted manner, the manufacturer will incur the expense of such testing and the AHJ may immediately revoke, modify, or suspend the use of such product or material within their jurisdiction. BORA reserves the right to revoke this acceptance, if it is determined by Miami-Dade County Product Control Division that this product or material fails to meet the requirements of the applicable building code.

This product is approved as described herein, and has been designed to comply with the High Velocity Hurricane Zone of the Florida Building Code.

DESCRIPTION: Series "DoorCraft®" 12'0" x 6'8" W/E Outswing Opaque Insulated Steel Door w/ Full Glazed Panel Sidelites

APPROVAL DOCUMENT: Drawing No. **S-2129**, dated 12/06/01, with revision 2 dated 06/06/02, titled "Wood Edge Opaque Double Door w/ 3-0 Sidelites up to 151" x 6'8 Outswing Unit", sheets 1 through 5, prepared by R. W. Building Consultants, Inc., bearing the Miami-Dade County Product Control Approval stamp with the Notice of Acceptance number and approval date by the Miami-Dade County Product Control Division.

MISSILE IMPACT RATING: Large and Small Missile Impact Resistant

LABELING: Each unit shall bear a permanent label with the manufacturer's name or logo, city, state and following statement: "Miami-Dade County Product Control Approved", unless otherwise noted herein.

RENEWAL of this NOA shall be considered after a renewal application has been filed and there has been no change in the applicable building code negatively affecting the performance of this product.

TERMINATION of this NOA will occur after the expiration date or if there has been a revision or change in the materials, use, and/or manufacture of the product or process. Misuse of this NOA as an endorsement of any product, for sales, advertising or any other purposes shall automatically terminate this NOA. Failure to comply with any section of this NOA shall be cause for termination and removal of NOA.

ADVERTISEMENT: The NOA number preceded by the words Miami-Dade County, Florida, and followed by the expiration date may be displayed in advertising literature. If any portion of the NOA is displayed, then it shall be done in its entirety.

INSPECTION: A copy of this entire NOA shall be provided to the user by the manufacturer or its distributors and shall be available for inspection at the job site at the request of the Building Official.
This NOA consists of this page 1 as well as approval document mentioned above.
The submitted documentation was reviewed by **Manuel Perez, P.E.**

DoorCraft® WOOD EDGE

6'8 OPAQUE INSULATED STEEL DOOR
OUTSWING UNIT WITH (2) 3-0 SIDELITES

GENERAL NOTES

1. THIS PRODUCT IS DESIGNED TO COMPLY WITH THE FLORIDA BUILDING CODE.
2. WOOD BUCKS BY OTHERS, MUST BE ANCHORED PROPERLY TO TRANSFER LOADS TO THE STRUCTURE.
3. PRODUCT ANCHORS SHALL BE AS LISTED AND SPACED AS SHOWN ON DETAILS. ANCHOR EMBEDMENT TO BASE MATERIAL SHALL BE BEYOND WALL DRESSING OR STUCCO.
4. DESIGNED PRESSURE RATING SEE TABLE PAGE 1.
5. THIS SYSTEM MEET THE WATER REQUIREMENTS FOR "HIGH VELOCITY HURRICANE ZONES" WITH THE USE OF THE HIGH DAM THRESHOLD. SEE NOTE BELOW DESIGN PRESSURE CHART.
6. THIS SYSTEM REQUIRES WINDBORNE DEBRIS EXTERNAL PROTECTION AS PRESCRIBED IN SECTION 1626.1 OF THE FLORIDA BUILDING CODE, AT SIDELITES ONLY.

RESIDENTIAL INSULATED STEEL DOOR
(Common to all frame conditions)

Door Leaf Construction:

Face sheets: 24 ga. (0.021") minimum thickness, Galvanized steel A-525 commercial quality – AKDQ per ASTM 620 with yield strength Fy(ave.)=23,981 psi.

Core design: Expanded polystyrene with 1.0 to 1.25 lbs. density, by Jeld-Wen, Inc.

Panel Construction: The active and inactive panels are constructed form 24GA. (0.020" min.) galvanized steel. The face sheet top and bottoms are bent 90° over the top and bottom rails. The top rail consists of LVL measuring 1.67" x 1.042". The bottom rail is roll formed 0.021" galvanized steel measuring 1.67" x 1.21" with a 1.645" x 3.0" x 0.831" piece of pressed fiber board in each corner attached with 0.5" x 2.0" wire staples. The sides of the face sheet are roll formed into the LVL latch stile and Ponderosa Pine hinge stile which measure 1.67" x 1.0". The interior cavity is filled with polystyrene. The face sheet is glued to the polystyrene.

Sash Construction: The sash is constructed from 24GA. (0.020" min.) galvanized steel. The edges of the face sheet are bent 90° over the polystyrene core and and glued to it. The sashes are routed to receive the ODL (HP Polypropylene Thermofil-P6-30FM0391) lite frame. The units are glazed with .125" tempered glass. The lite frames are sealed with QSD glazing compound on the exterior.

Frame Construction: The frames are constructed from Ponderosa Pine jambs measuring 4.563" x 1.25". The head jambs are mortised and butt joined to the side jambs and attached with (3) 16GA. 2" x 7/16" crown wire staples. The units use a bump face threshold, either a high dam or low profile. The threshold is attached to the frame with (3) 16GA. 2" x 7/16" crown wire staples.

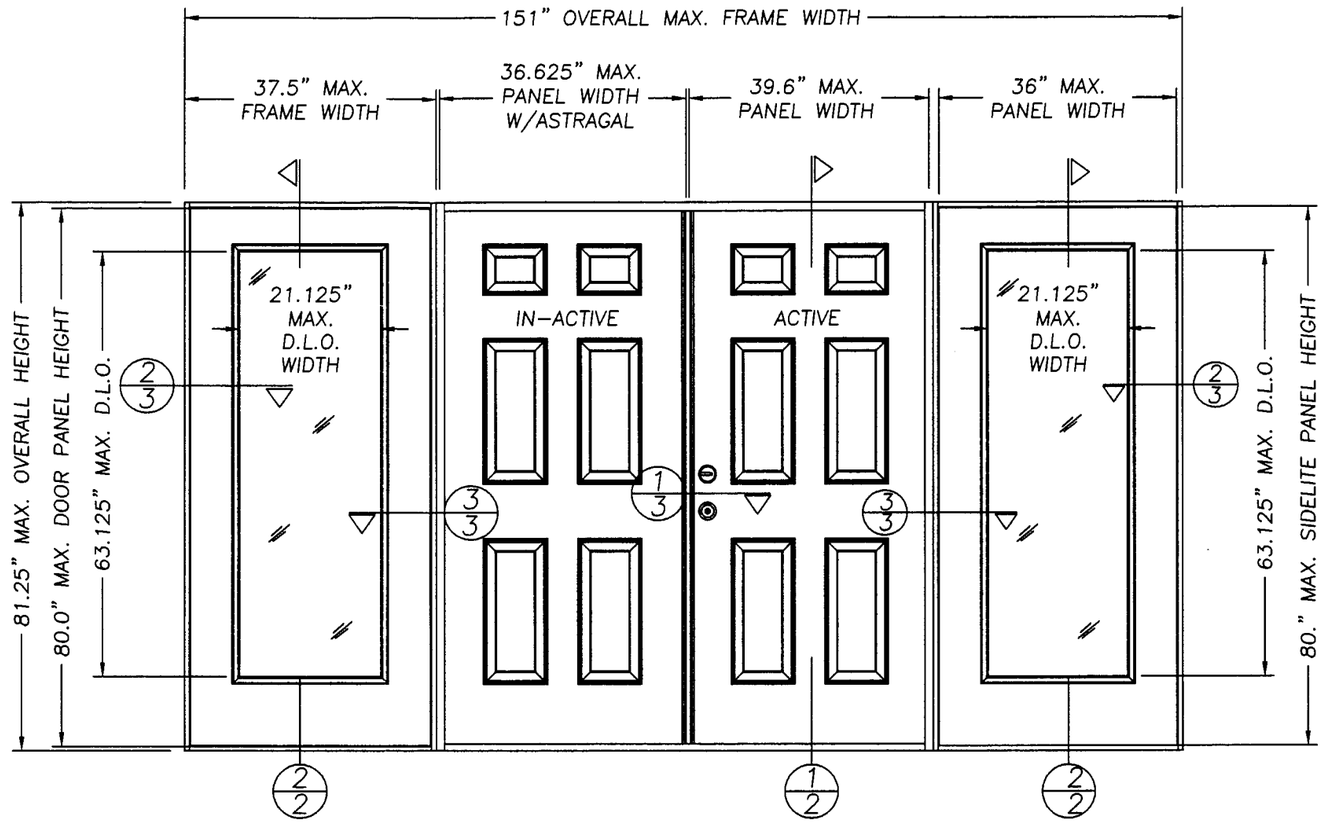

TESTED OUTSWING ELEVATION
VIEWED FROM INTERIOR

DESIGN PRESSURE RATING WHERE WATER INFILTRATION REQUIREMENT IS NEEDED *SEE NOTE BELOW		
UNIT TYPE	WITH WINDJAMBER II ASTRAGAL	WITH IMPERIAL ASTRAGAL
DOUBLE W/SIDELITES	+67.0 psf −70.0 psf	+50.0 psf −50.0 psf

*NOTE: THE HIGH DAM THRESHOLD MUST BE USED TO MEET THE WATER REQUIREMENTS FOR "HIGH VELOCITY HURRICANE ZONES".

TABLE OF CONTENTS

SHEET #	DESCRIPTION
1	GENERAL NOTES AND TYPICAL ELEVATIONS
2	VERTICAL CROSS SECTIONS & BILL OF MATERIALS
3	HORIZONTAL CROSS SECTIONS & NOTES
4	ANCHORING LOCATIONS & DETAILS
5	UNIT COMPONENTS

Approved as complying with the Florida Buiding Code
Date AUG. 22, 2002
NOA# 01-1224.02
Miami Dade Product Control Division
By Manuel Perez

JELD-WEN, INC.
31725 HIGHWAY 97 NORTH
CHILOQUIN, OR. 97624
PH. 541.783.2057

PRODUCT: WOOD EDGE OPAQUE DOUBLE DOOR W/3-0 SIDELITES UP TO 151" x 6'8 OUTSWING UNIT

PART OR ASSEMBLY: TYPICAL ELEVATION & GENERAL NOTES

REVISIONS

NO.	DATE		BY
2	06/06/02	GENERAL REVISION	TJH
1	03/14/02	GENERAL REVISION	TJH

RW BUILDING CONSULTANTS, INC.
813.684.3831

DATE: 12/6/01
SCALE: NTS
DWG. BY: WLN
CHK. BY: RW
DRAWING NO.: S-2129
SHEET 1 OF 5

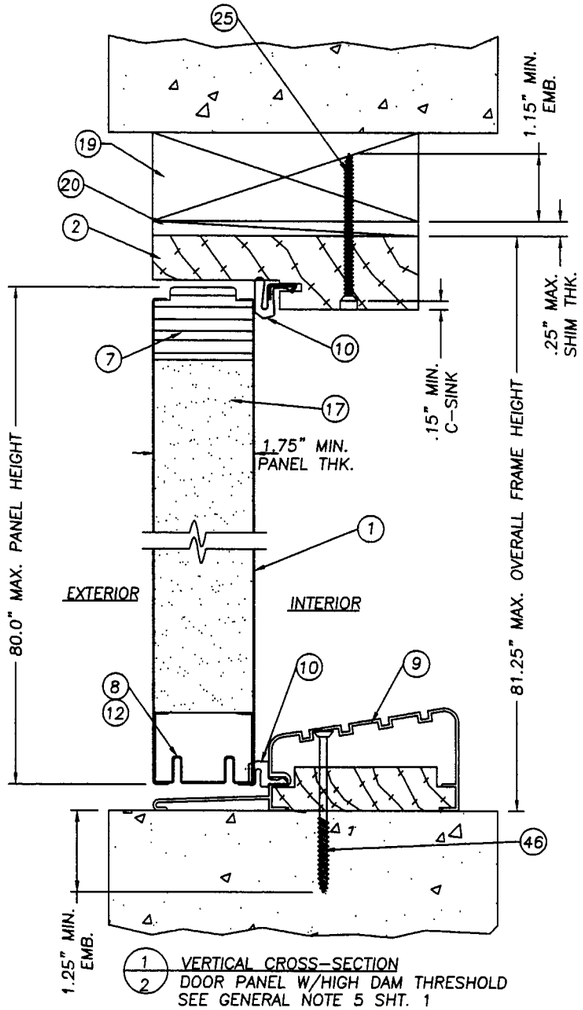

1/2 VERTICAL CROSS-SECTION
DOOR PANEL W/HIGH DAM THRESHOLD
SEE GENERAL NOTE 5 SHT. 1

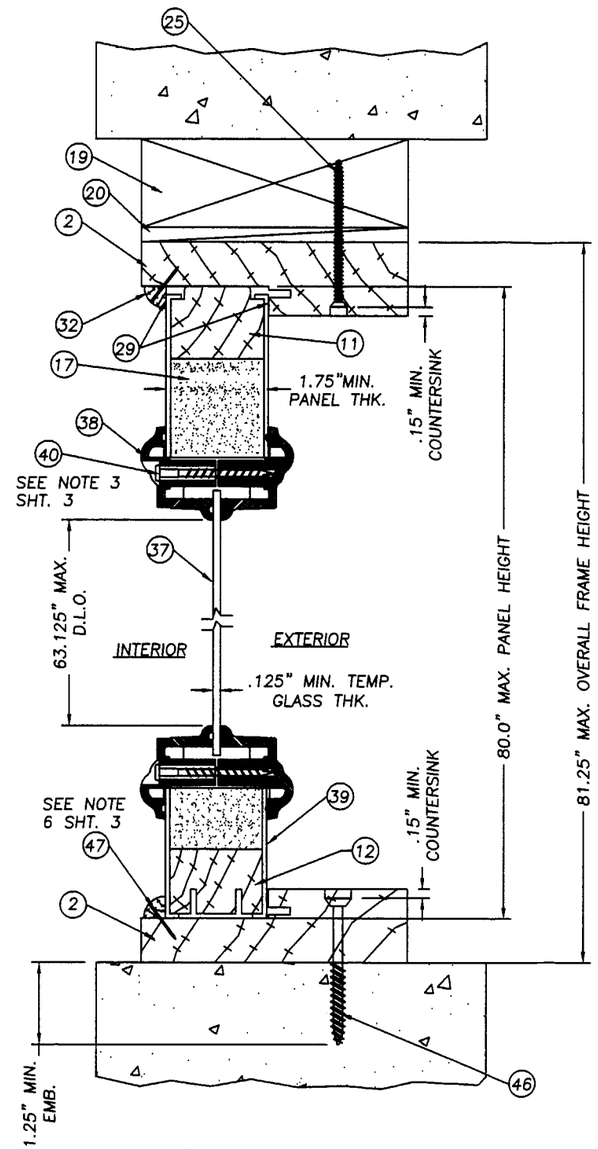

2/2 VERTICAL CROSS-SECTION
SIDELITE SASH

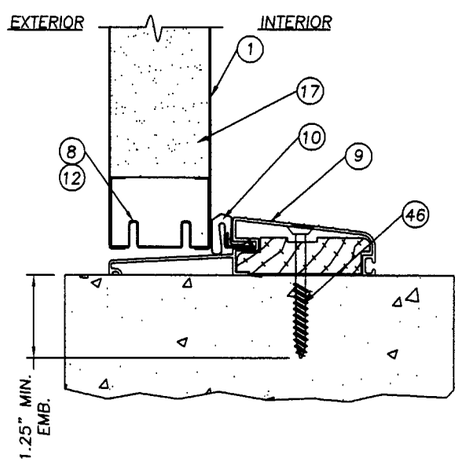

1/2 VERTICAL CROSS-SECTION
DOOR PANEL W/LOW PROFILE THRESHOLD
"DOES NOT" MEET THE WATER INFILTRATION REQUIREMENTS FOR THE "HIGH VELOCITY HURRICANE ZONES".

ITEM	DESCRIPTION	MATERIAL
1	DOOR, WOOD EDGE 1.75" THK. 24GA. (.021"MIN.)	STEEL
2	HEAD JAMB (1 1/4" x 4 9/16" PONDEROSA FINGER JOINTED PINE)	PINE
3	HINGE JAMB (1 1/4" x 4 6/16" PONDEROSA FINGER JOINTED PINE)	PINE
4	SIDELITE BLANK JAMB (1 1/4" x 4 9/16" PONDEROSA FINGER JOINTED PINE)	PINE
5	4" x 4" BUTT HINGE 12ga.(.097" HAGER)	STEEL
6	#9 X 1" PFH WOOD SCREW (HINGE TO DOOR)	STEEL
7	DOOR LATCH SIDE STILE & TOP RAIL LVL1.67" x 1"	LVL
8	DOOR PANEL BOTTOM RAIL (1.73" x 1.21" x .021" THK. MIN. 24GA.)	STEEL
9	OUTSWING BUMPER THRESHOLD (.050" EXTRUDED ALUM. BY PEMKO)	ALUM.
10	COMPRESSION WEATHERSTRIP (SCHLEGEL Q-LON QDS 650)	FOAM
11	SIDELITE PANEL WOOD TOP RAIL 1.67" x 1"	WOOD
12	DOOR AND SIDELITE PANEL WOOD BOTTOM RAIL 1.67" x 1"	WOOD
13	DOOR HINGE & SIDELITE PANEL WOOD SIDE STILE 1.67" x 1"	WOOD
14	#10 x 1 1/2" PFH WOOD SCREW	STEEL
15	WOOD LOCK BLOCK (1.71" x 4.0" x 12.0")	WOOD
16	NOT USED	–
17	EXPANDED POLYSTYRENE (1.0 to 1.25 lb. DENSITY) BY JELD-WEN	FOAM
18	HIGH DAM BUMP THRESHOLD BY IMPERIAL .051" ALUM.	ALUM.
19	2x WOOD SUB BUCK	–
20	SHIM MATERIAL (.25" MAX. THK.)	–
21	KWIKSET 400 SERIES KNOB	–
22	KWIKSET TITAN 700 SERIES DEADBOLT	–
23	1/4" x 1 3/8" WOOD MULLION CAP	WOOD
24	NOT USED	–
25	# 8 x 2 1/2" PHILL. FLATHEAD WOOD SCREW	STEEL
26	ASTRAGAL EXTRUDED ALUM. (WR68J *WINDJAMBER II*)	ALUM.
27	16GA. BRAD TRIM NAIL 1" L.	STEEL
28	GLAZING COMPOUND DOW 1199	SILICONE
29	SILICONE CAULK (CR LAWRENCE 33S)	SILICONE
30	GLAZING COMPOUND (QSD BY ODL)	SILICONE
31	#8 x 1" PHILLIPS PANHEAD WOOD SCREW (ASTRAGAL WR68J TO DOOR)	STEEL
32	3/8" x 3/8" 1/4" ROUND SIDELITE STOP	WOOD
33	1/4"x 2 3/4" TAPCON	STEEL
34	SCHLAGE KNOB SET #F51	–
35	SCHLAGE DEADBOLT #B360	–
36	NOT USED	–
37	1/8" TEMPERED GLASS (BY PPG)	GLASS
38	LITE FRAME (ODL HP POLY. THERMOFIL-P6-30FM0391)	POLYPROP.
39	STEEL SIDELITE PANEL 24GA. (.021" MIN. STEEL)	STEEL
40	#8 x 1 1/2" PLASCREW (LITE FRAME)	STEEL
41	EXTRUDED ALUMINUM ASTRAGAL BY IMPERIAL	ALUM.
42	YALE KNOB HERITAGE SERIES	–
43	YALE DEADBOLT HERITAGE SERIES	–
44	#10 x 1" PHILLIPS FLATHEAD WOOD SCREW	STEEL
45	#8 x 2" PHILLIPS FLATHEAD WOOD SCREW	STEEL
46	1/4"x 2 1/2" TAPCON	STEEL
47	16GA. BRAD TRIM NAIL 3/4" L.	STEEL
48	3/4" THK. x 4 9/16" DEEP PRESSURE TREATED REINFORCEMENT	WOOD

JELD-WEN, INC.
31725 HIGHWAY 97 NORTH
CHILOQUIN, OR. 97624
PH. 541.783.2057

PRODUCT: WOOD EDGE OPAQUE DOUBLE DOOR W/3-0 SIDELITES UP TO 151" x 6'8 OUTSWING UNIT

PART OR ASSEMBLY: VERTICAL CROSS SECTIONS & BILL OF MATERIALS

NO.	DATE	REVISIONS	BY
2	06/06/02	GENERAL REVISION	TJH
1	03/07/02	GENERAL REVISION	TJH

RW BUILDING CONSULTANTS, INC.
813.684.3831

Approved as complying with the Florida Buiding Code
Date AUG. 22, 2002
NOA# 01-1224.02
Miami Dade Product Control Division
By Manuel Perez

DATE: 12/6/01
SCALE: NTS
DWG. BY: WLN
CHK. BY: RW
DRAWING NO.: S-2129
SHEET 2 OF 5

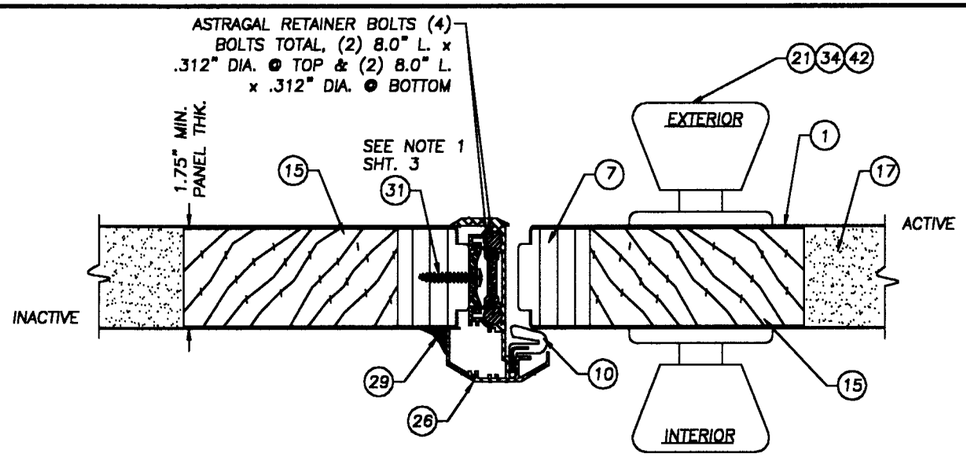

1/3 HORIZONTAL CROSS SECTION AT ASTRAGAL W/WINDJAMBER II SEE DESIGN PRESSURE CHART

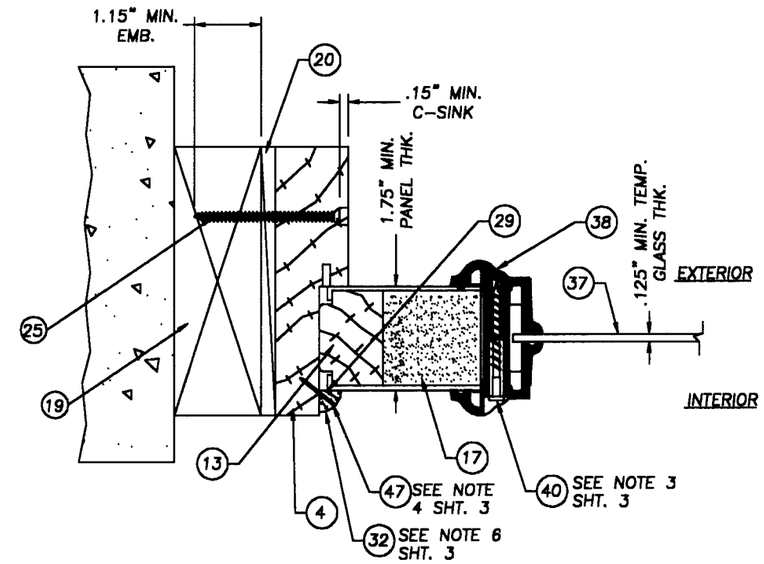

2/3 HORIZONTAL CROSS SECTION AT SIDELITE TO BUCK, TYP.

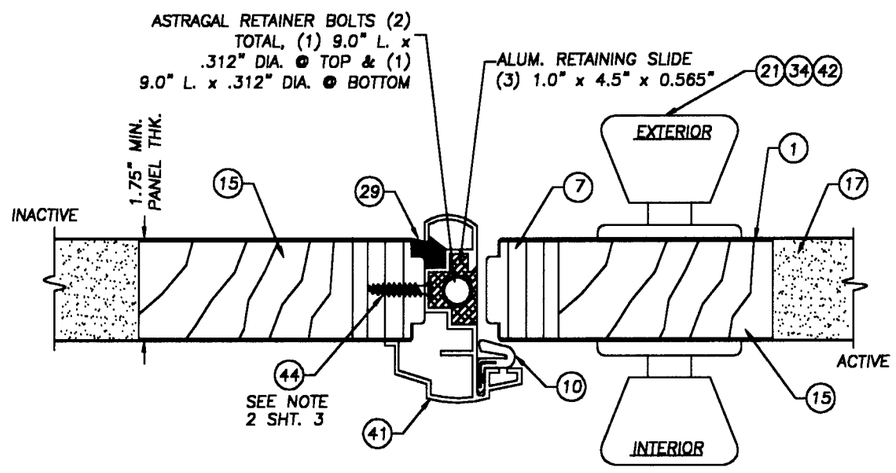

1/3 HORIZONTAL CROSS SECTION AT ASTRAGAL OPTIONAL IMPERIAL ASTRAGAL SEE DESIGN PRESSURE CHART

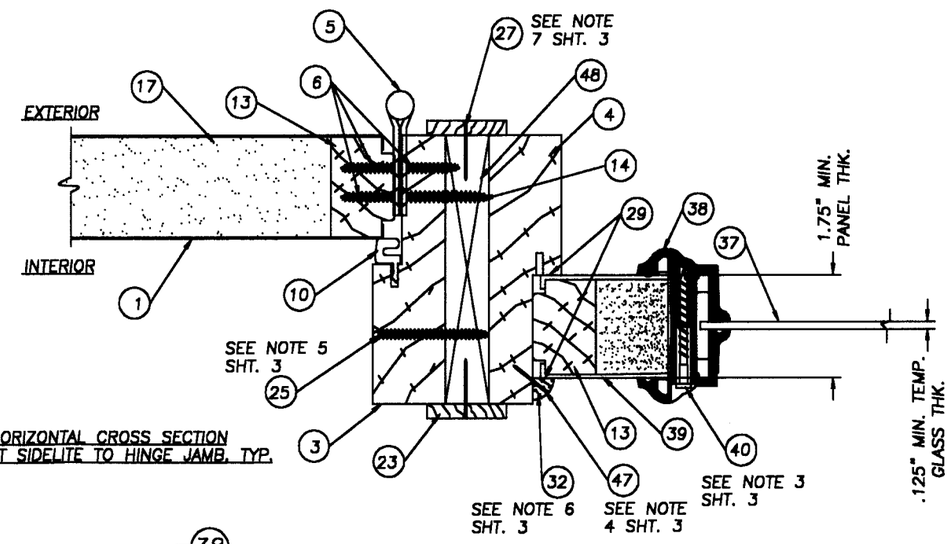

3/3 HORIZONTAL CROSS SECTION AT SIDELITE TO HINGE JAMB, TYP.

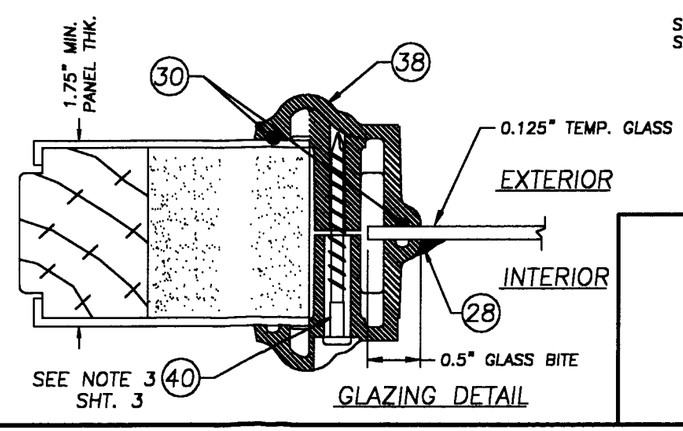

GLAZING DETAIL

NOTES:

1. SPACING FOR #8 x 1" PFH SCREW ATTACHING THE WINDJAMBER ASTRAGAL TO THE INACTIVE DOOR IS AS FOLLOWS: TOP DOWN; 1.0", 3.0" & 5.0". FROM THE BOTTOM UP; 1.0", 3.0", 5.0", 20.0" & 38.75".
2. SPACING FOR ITEM 44 #10 x 1" PFH SCREW ATTACHING THE IMPERIAL ASTRAGAL TO THE INACTIVE DOOR IS AS FOLLOWS: FROM THE TOP DOWN & BOTTOM UP; 1.0", 2.5", 4.0", 5.5", 13.0", 18.0" & 26.0".
3. SPACING FOR #8 x 1 1/2" PLASCREW IS AS FOLLOWS; TOP & BOTTOM; (3) SCREWS (1) 3.0" IN FROM EACH HORIZONTAL CORNER WITH (1) MORE IN THE CENTER. FROM THE TOP OF THE FRAME DOWN ON THE SIDES; 3.0", 13.0", 26.0", 39.0", 52.0" & 63.0".
4. SPACING FOR BRAD TRIM NAIL 3/4" L. ATTACHING THE QUARTER ROUND TO THE SIDELITE IS AS FOLLOWS; TOP & BOTTOM; 1.25" IN FROM EACH HORIZONTAL CORNER WITH (1) MORE NAIL IN THE MIDDLE. SIDES; 1.25" FROM EACH END & SIX MORE EQUALLY SPACED ON THE FIELD.
5. SPACING FOR #8 x 2.5" PFH WOOD SCREW ATTACHING THE MULLIONS TOGETHER IS AS FOLLOWS; 6.0" FROM EACH VERTICAL CORNER WITH (4) MORE SCREWS EQUALLY SPACED, A TOTAL OF (6) SCREWS PER EACH VERTICAL MULLION.
6. THE SIDELITE IS SECURED INTO THE SIDELITE JAMB WITH SILICONE CAULK ON THREE SIDES & 3/8" x 3/8" 1/4 ROUND & BRAD TRIM NAIL x 3/4" L.
7. THE MULLION CAP IS ATTACHED TO THE PRESSURE TREATED REINFOECEMENT WITH ITEM #27 A 1" TRIM NAIL SPACED A MAX. OF 12" ON CENTER.

JELD-WEN, INC.
31725 HIGHWAY 97 NORTH
CHILOQUIN, OR. 97624
PH. 541.783.2057

PRODUCT: WOOD EDGE OPAQUE DOUBLE DOOR W/3-0 SIDELITES UP TO 151" x 6'8 OUTSWING UNIT

PART OR ASSEMBLY: HORIZONTAL CROSS SECTIONS

NO.	DATE	REVISIONS	BY
2	06/06/02	GENERAL REVISION	TJH
1	03/14/02	GENERAL REVISION	TJH

RW BUILDING CONSULTANTS, INC.
813.684.3831

Approved as complying with the Florida Building Code
Date: AUG. 27, 2002
NOA# 01-1224.02
Miami Dade Product Control Division
By: Manuel Perez

DATE: 12/6/01
SCALE: NTS
DWG. BY: WLN
CHK. BY: RW
DRAWING NO.: S-2129
SHEET 3 OF 5

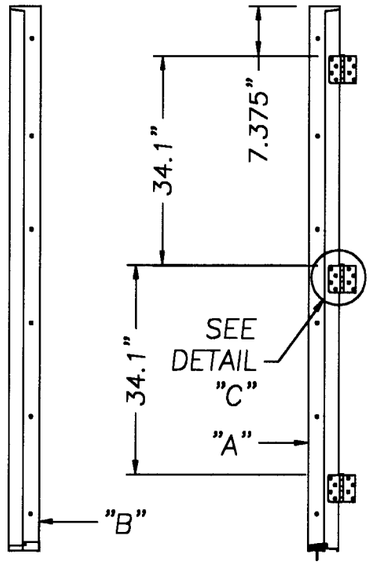

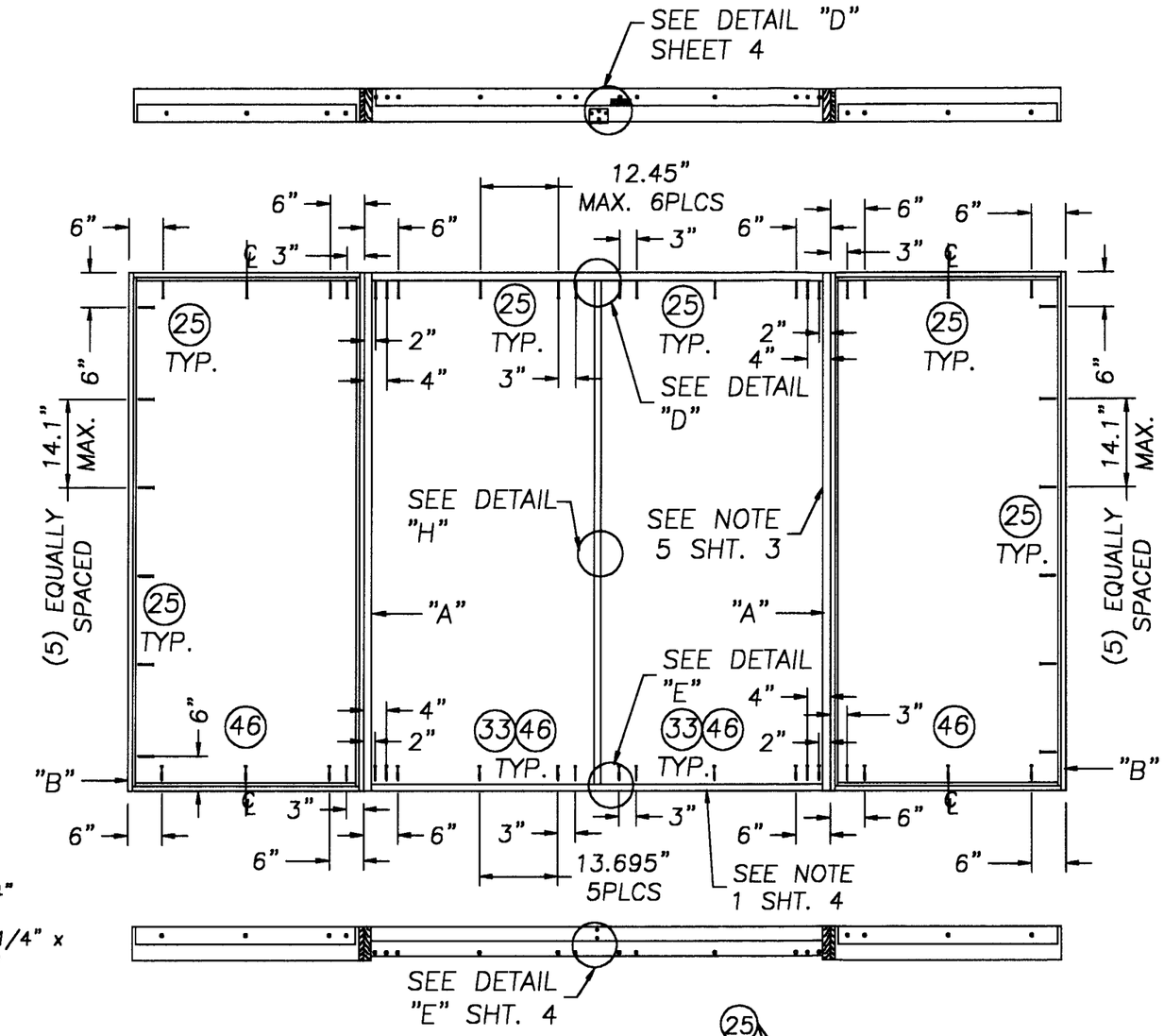

NOTE:
1. USE ITEM #33 A 1/4" x 2 3/4" TAPCON WITH THE HIGH DAM THRESHOLD. USE ITEM #46 A 1/4" x 2 1/2" TAPCON WITH THE LOW PROFILE THRESHOLD.

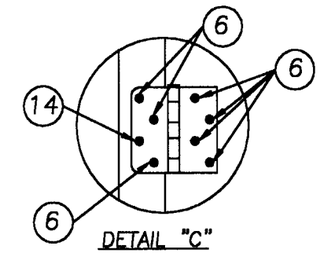

DETAIL "C"

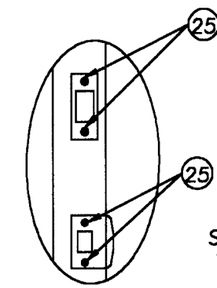

DETAIL H
STRIKE PLATES TO ASTRAGAL

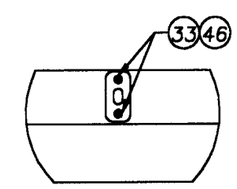

DETAIL E (IMPERIAL ASTRAGAL)
AT SILL

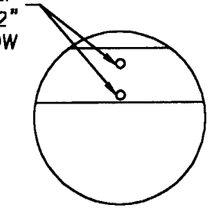

DETAIL "E" AT SILL
WINDJAMBER II ASTRAGAL BY GENESIS
RETAINER BOLT HOLES & OPTIONAL SURFACE BOLT STRIKE PLATE

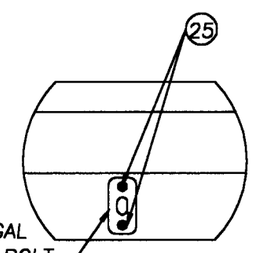

DETAIL D (IMPERIAL ASTRAGAL)
AT HEADER

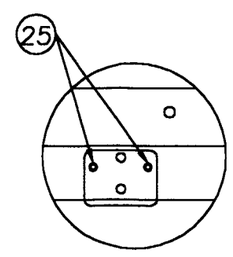

DETAIL "D" AT HEADER
WINDJAMBER II ASTRAGAL BY GENESIS
ATTACH ASTRAGAL THROW BOLT STRIKE PLATE TO FRAME AS SHOWN.

JELD-WEN, INC.
31725 HIGHWAY 97 NORTH
CHILOQUIN, OR. 97624
PH. 541.783.2057

PRODUCT: WOOD EDGE OPAQUE DOUBLE DOOR W/3-0 SIDELITES UP TO 151" x 6'8 OUTSWING

PART OR ASSEMBLY: ANCHORING LOCATION & DETAILS

NO.	DATE	REVISIONS	BY
2	06/06/02	GENERAL REVISION	TJH
1	03/14/02	GENERAL REVISION	TJH

RW BUILDING CONSULTANTS, INC.
813.684.3831

Approved as complying with the Florida Buiding Code
Date AUG. 22, 2002
NOA# 01-1224.02
Miami Dade Product Control Division
By Manuel Perez

DATE: 12/6/01
SCALE: NTW
DWG. BY: WLN
CHK. BY: RW
DRAWING NO.: S-2129
SHEET 4 OF 5

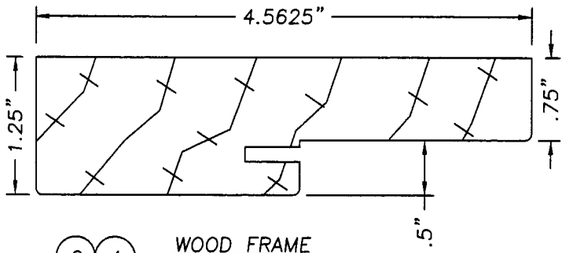

2 4 3 WOOD FRAME

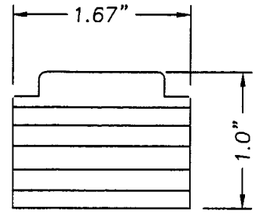

7 LVL LATCH STILE

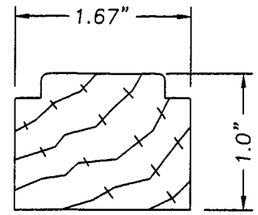

13 11 DOOR TOP & HINGE STILE

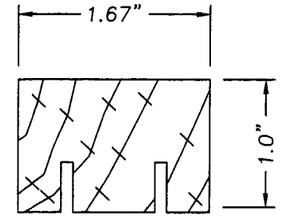

12 DOOR PANEL & SIDELITE BOTTOM RAIL WOOD

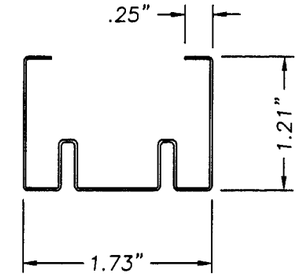

8 DOOR STEEL EDGE CAP, BOTTOM
.021" ROLL FORMED STEEL

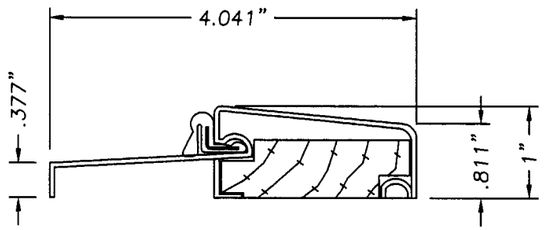

OUTSWING BUMPFACE THRESHOLD
LOW PROFILE
.050" EXTRUDED ALUMINUM
LOW PROFILE BY WORLD WIDE
.050" EXTRUDED ALUMINUM
THIS THRESHOLD DOES NOT MEET
THE WATER REQUIREMENTS FOR
MIAMI-DADE COUNTY
SEE SEE GENERAL NOTE 5 SHT. 1

9

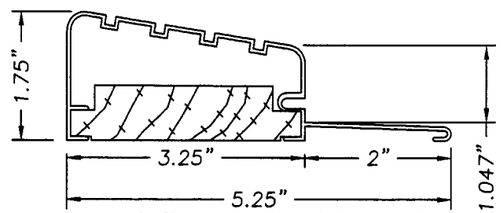

18 OUTSWING HIGH DAM BUMP
FACE ALUMINUM THRESHOLD
.051" WALL THK. BY IMPERIAL
THIS THRESHOLD MEETS
THE WATER REQUIREMENTS FOR
MIAMI-DADE COUNTY
SEE GENERAL NOTE 5 SHT. 1

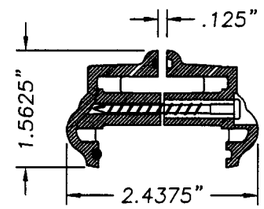

38 LITE FRAME ODL
HP POLYPROPYLENE
(THERMOFIL-P6-30FM0391)

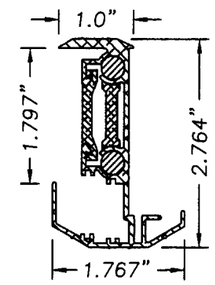

26 ASTRAGAL WINDJAMBER II
(WR68J T-6063 EXTRUDED ALUMINUM
ASTRAGAL HAS
(2) 8 .0" L. x .312" DIA.
BOLTS @ BOTTOM &
(2) 8 .0" L. x .312" DIA.
BOLTS @ TOP

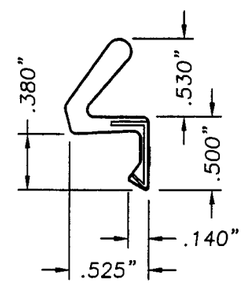

10 COMPRESSION WEATHERSRTIP
SCHLEGEL Q-LON QDS 650

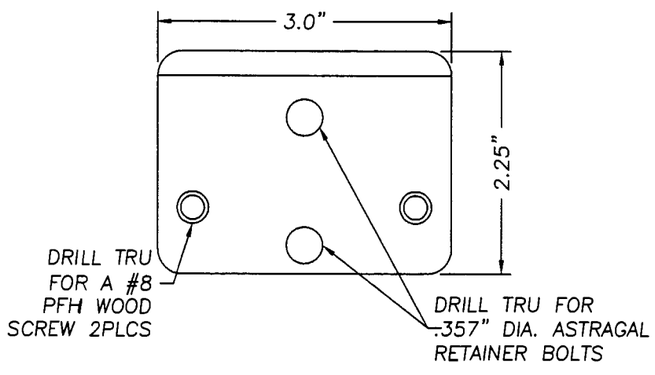

WINDJAMBER II WR68J STRIKE PLATE
STEEL PLATE

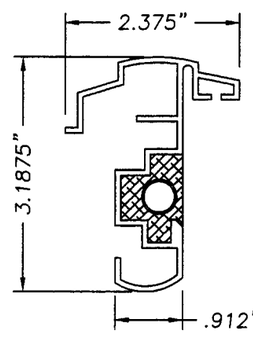

41 OPTIONAL
IMPERIAL ASTRAGAL
EXTRUDED ALUMINUM .075" WALL
ASTRAGAL HAS
(1) 9.0" L. x .312" DIA.
BOLT @ TOP &
(1) 9.0" L. x .312" DIA.
BOLT @ BOTTOM

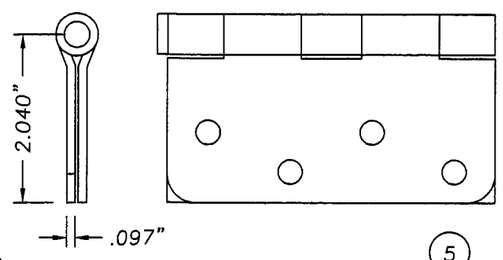

5 4 x 4 STEEL DOOR HINGE
.097" THK. STEEL BY HAGER

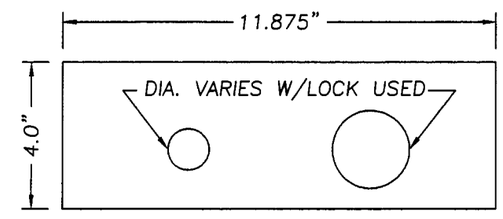

15 WOOD LOCK BLOCK, 1.71" THK.

Approved as complying with the Florida Buiding Code
Date AUG. 22, 2002
NOA# 01-1224.02
Miami Dade Product Control Division
By Manuel Perez

JELD-WEN, INC.
31725 HIGHWAY 97 NORTH
CHILOQUIN, OR. 97624
PH. 541.783.2057

PRODUCT: WOOD EDGE OPAQUE DOUBLE DOOR W/3-0 SIDELITES UP TO 151" x 6'8 OUTSWING UNIT
PART OR ASSEMBLY: UNIT COMPONENTS

NO.	DATE	REVISIONS	BY
2	06/06/02	GENERAL REVISION	TJH
1	03/14/02	GENERAL REVISION	TJH

RW BUILDING CONSULTANTS, INC.
813.684.3831

DATE: 12/6/01
SCALE: NTS
DWG. BY: WLN
CHK. BY: RW
DRAWING NO.: S-2129
SHEET 5 OF 5