MIAMI-DADE

BUILDING CODE COMPLIANCE OFFICE (BCCO)
PRODUCT CONTROL DIVISION

MIAMI-DADE COUNTY, FLORIDA
METRO-DADE FLAGLER BUILDING
140 WEST FLAGLER STREET, SUITE 1603
MIAMI, FLORIDA 33130-1563
(305) 375-2901 FAX (305) 375-2908

NOTICE OF ACCEPTANCE (NOA)

American Shutter Products, Inc.
6360 Topaz Court
Fort Myers, Fl. 33912

SCOPE:

This NOA is being issued under the applicable rules and regulations governing the use of construction materials. The documentation submitted has been reviewed by the BCCO and accepted by the Building Code and Product Review Committee (BCPRC) to be used in Miami Dade County and other areas where allowed by the Authority Having Jurisdiction (AHJ).

This NOA shall not be valid after the expiration date stated below. The BCCO (In Miami Dade County) and/or the AHJ (in areas other than Miami Dade County) reserve the right to have this product or material tested for quality assurance purposes. If this product or material fails to perform in the accepted manner, the manufacturer will incur the expense of such testing and the AHJ may immediately revoke, modify, or suspend the use of such product or material within their jurisdiction. BCPRC reserves the right to revoke this acceptance, if it is determined by BCCO that this product or material fails to meet the requirements of the applicable building code.

This product is approved as described herein, and has been designed to comply with the South Florida Building Code, 1994 Edition for Miami-Dade County or Florida Building Code.

DESCRIPTION: Foam-Filled Rolled Aluminum Slat Roll-Up Shutter

APPROVAL DOCUMENT: Drawing No. 96-150, titled "Super Roll-Up Shutter with SAR/155A Slat", sheets 1 through 11, prepared, signed and sealed by Walter Tillit, P.E., dated 2/6/98, bearing the Miami-Dade County Product Control Renewal stamp with the Notice of Acceptance number and expiration date by the Miami-Dade County Product Control Division.

MISSILE IMPACT RATING: Large and Small Missile Impact

LABELING: Each unit shall bear a permanent label with the manufacturer's name or logo, city, state and following statement: "Miami-Dade County Product Control Approved", unless otherwise noted herein.

RENEWAL of this NOA shall be considered after a renewal application has been filed and there has been no change in the applicable building code negatively affecting the performance of this product.

TERMINATION of this NOA will occur after the expiration date or if there has been a revision or change in the materials, use, and/or manufacture of the product or process. Misuse of this NOA as an endorsement of any product, for sales, advertising or any other purposes shall automatically terminate this NOA. Failure to comply with any section of this NOA shall be cause for termination and removal of NOA.

ADVERTISEMENT: The NOA number preceded by the words Miami-Dade County, Florida, and followed by the expiration date may be displayed in advertising literature. If any portion of the NOA is displayed, then it shall be done in its entirety.

INSPECTION: A copy of this entire NOA shall be provided to the user by the manufacturer or its distributors and shall be available for inspection at the job site at the request of the Building Official.

This NOA **renews NOA # 99-0120.02** and, consists of this page 1 as well as approval document mentioned above. The submitted documentation was reviewed by **Raul Rodriguez.**

PRODUCT CONTROL ACCEPTED

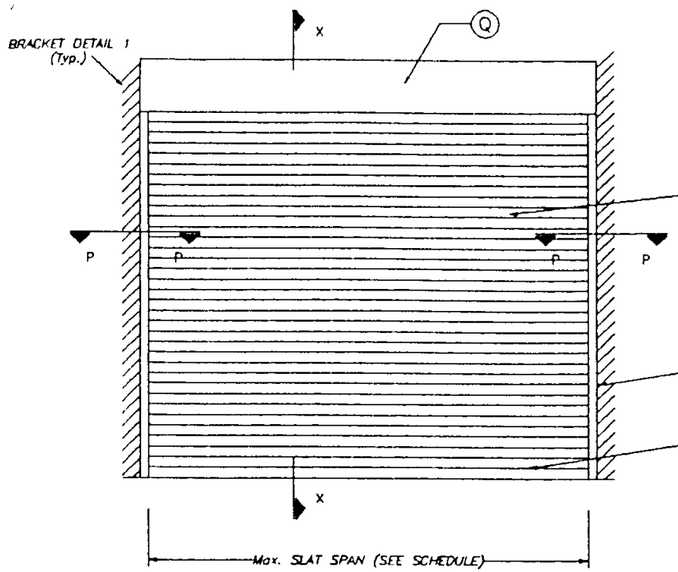

TYPICAL SINGLE UNIT ELEVATION (NO STORM BARS REQUIRED)

NOTE: SEE SHEET 2 & 3 OF 11 FOR COMPONENTS NOMENCLATURE.
SEE SECTIONS ON SHEETS 4, 5, 6 & 7 OF 11.

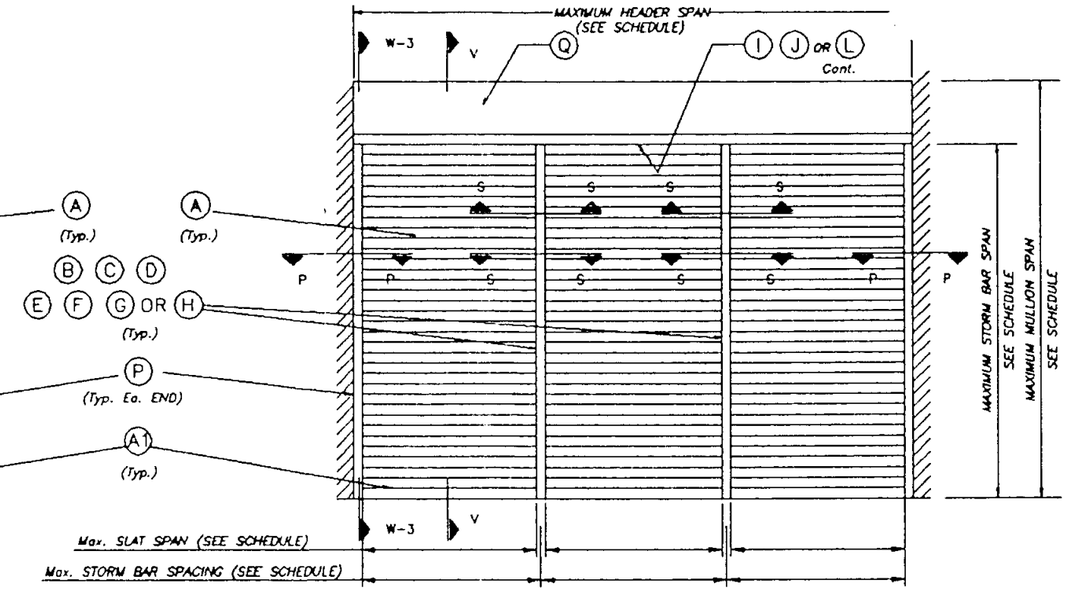

TYPICAL MULTIPLE UNIT ELEVATION (STORM BARS REQUIRED)

NOTE: SEE SHEET 2 & 3 OF 11 FOR COMPONENTS NOMENCLATURE.
SEE SECTIONS ON SHEETS 4, 5, 6 & 7 OF 11.

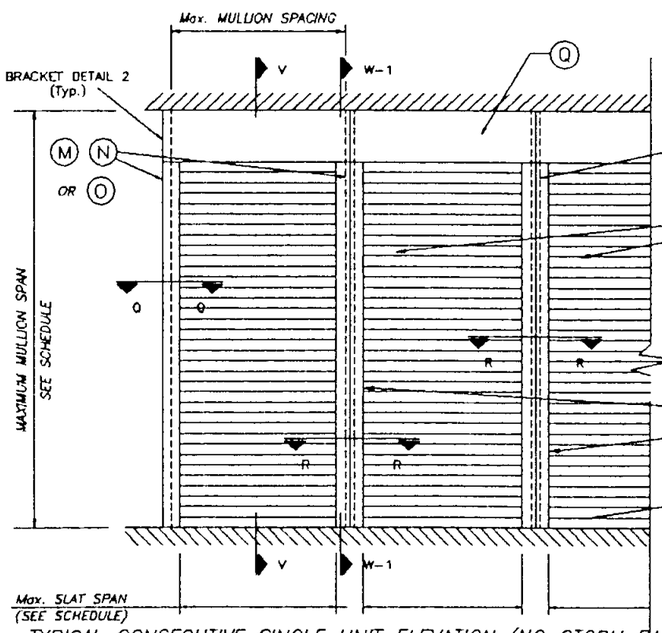

TYPICAL CONSECUTIVE SINGLE UNIT ELEVATION (NO STORM BARS REQUIRED)

NOTE: SEE SHEET 2 & 3 OF 11 FOR COMPONENTS NOMENCLATURE.
SEE SECTIONS ON SHEETS 4, 5, 6 & 7 OF 11.

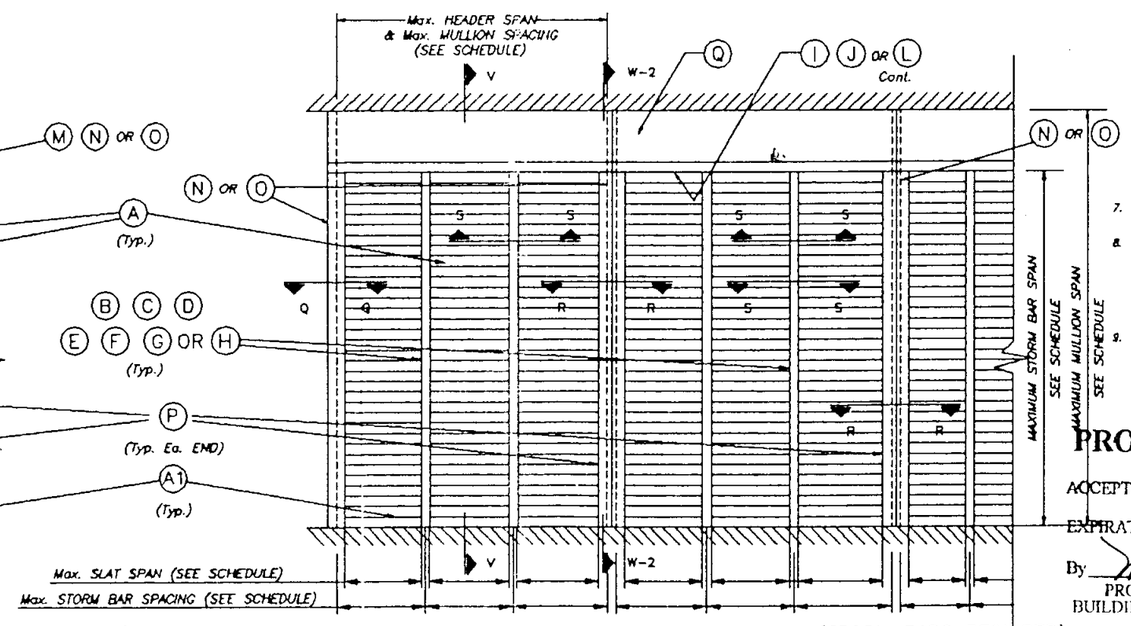

TYPICAL CONSECUTIVE MULTIPLE UNIT ELEVATION (STORM BARS REQUIRED)

NOTE: SEE SHEET 2 & 3 OF 11 FOR COMPONENTS NOMENCLATURE.
SEE SECTIONS ON SHEETS 4, 5, 6 & 7 OF 11.

PRODUCT RENEWED

ACCEPTANCE No. 02-0102.02

EXPIRATION DATE February 19, 2007

By

PRODUCT CONTROL DIVISION
BUILDING CODE COMPLIANCE OFFICE

GENERAL NOTES:

1. ROLL-UP SHUTTER HAS BEEN DESIGNED IN ACCORDANCE WITH THE DADE COUNTY, 1994 EDITION OF THE SOUTH FLORIDA BUILDING CODE. WIND VELOCITY CONSIDERED SHALL BE 110 m.p.h. IMPORTANCE FACTOR IS 1.05. COASTAL ZONE WIND LOADS SHALL BE DETERMINED FOR EXPOSURE "D" FOR BUILDINGS WITH MEAN ROOF HEIGHT OVER 60'-0" ONLY, AND FOR EXPOSURE "C" FOR BUILDINGS WITH MEAN ROOF HEIGHT EQUAL OR LESS THAN 60'-0". NON COASTAL ZONE WIND LOADS SHALL BE DETERMINED FOR EXPOSURE "C", AS REQUIRED BY ASCE 7-88. ROLL-UP SHUTTER'S ADEQUACY FOR IMPACT AND FATIGUE RESISTANCE HAS BEEN VERIFIED IN ACCORDANCE WITH SECTIONS 2315 & 2314 RESPECTIVELY OF THE ABOVE MENTIONED CODE.
2. ALL ALUMINUM EXTRUSIONS SHALL BE 6063-T6 ALLOY (UNLESS OTHERWISE NOTED).
3. ALL SCREWS TO BE STAINLESS STEEL 304 OR 316 SERIES W/50 ksi YIELD POINT AND 90 ksi TENSILE STRENGTH.
4. BOLTS TO BE 2024-T4 ALUMINUM ALLOY, GALVANIZED OR STAINLESS STEEL WITH 38 ksi MINIMUM YIELD POINT.
5. STORM BARS SHALL REMAIN IN PLACE AT ALL TIMES.
6. ANCHORS TO WALL SHALL BE AS FOLLOWS: (UNLESS OTHERWISE NOTED)
   (A) TO EXISTING POURED CONCRETE:
   - 1/4" ø TAPCON ANCHORS OR 1/4" ø RAWL ZAMAC NAILIN, AS MANUFACTURED BY I.T.W./RAMSET, OR ELCO INDUSTRIES AND THE RAWL PLUG CO., INC., RESPECTIVELY.

   NOTES:
   A.1) MINIMUM EMBEDMENT OF CONCRETE ANCHORS INTO THE CONCRETE UNIT SHALL BE 1 1/2". NO EMBEDMENT INTO STUCCO SHALL BE CONSIDERED AS PART OF THE REQUIRED EMBEDMENT.
   A.2) IN CASE THAT PRECAST STONE, PRECAST CONCRETE PANELS, OR PAVERS BE FOUND ON THE EXISTING WALL OR FLOOR, ANCHORS SHALL BE LONG ENOUGH TO REACH THE MAIN STRUCTURE BEHIND SUCH PANELS. EMBEDMENT SHALL BE 1 1/2" MINIMUM.

   (B) TO EXISTING CONCRETE BLOCK WALL:
   - 1/4" ø TAPCON ANCHORS OR 1/4" ø RAWL ZAMAC NAILIN, AS MANUFACTURED BY I.T.W./RAMSET, OR ELCO INDUSTRIES AND THE RAWL PLUG CO., INC., RESPECTIVELY.

   NOTES:
   B.1) MINIMUM EMBEDMENT OF TAPCON ANCHORS AND RAWL ZAMAC NAILIN, INTO THE CONCRETE BLOCK UNIT SHALL BE 1 1/4".
   B.2) IN CASE THAT PRECAST STONE OR PRECAST CONCRETE PANELS BE FOUND ON THE EXISTING WALL, ANCHORS SHALL BE LONG ENOUGH TO REACH THE MAIN STRUCTURE BEHIND SUCH PANELS. ANCHORAGE SHALL BE 1 1/4" MINIMUM.

   (C) ANCHORS SHALL BE INSTALLED FOLLOWING ALL OF THE RECOMENDATIONS AND SPECIFICATIONS OF THE ANCHOR'S MANUFACTURER.

   (D) ANCHORAGE TO WOOD FRAME BUILDINGS NOT COVERED IN THIS DRAWING SHALL BE ENGINEERED ON A JOB BY JOB BASIS.
7. IT SHALL BE THE RESPONSIBILITY OF THE CONTRACTOR TO VERIFY THE SOUNDNESS OF THE STRUCTURE WHERE SHUTTER IS TO BE ATTACHED TO INSURE PROPER ANCHORAGE.
8. SHUTTER MANUFACTURER'S STAMP SHALL BE PLACED ON THE EXPOSED SURFACE OF THE SIDE RAIL APROXIMATELY 4" ABOVE THE BOTTOM OF SUCH RAIL.
   STAMP SHALL READ AS FOLLOWS:
   ROLL-UP SHUTTER
   AMERICAN SHUTTER PRODUCTS, INC.
   FT. MYERS, FLORIDA
   DADE COUNTY PRODUCT CONTROL APPROVED.
9. ROLL-UP MECHANISM NOT PART OF THIS APPROVAL.

PRODUCT RENEWED

ACCEPTANCE No. 99-0170.02

EXPIRATION DATE February 19, 2007

By

PRODUCT CONTROL DIVISION
BUILDING CODE COMPLIANCE OFFICE

APPROVED AS COMPLYING WITH THE SOUTH FLORIDA BUILDING CODE
DATE FEBRUARY 19, 1998
BY
PRODUCT CONTROL DIVISION
BUILDING CODE COMPLIANCE OFFICE
ACCEPTANCE NO. 96-0916.01

DADE COUNTY

2/16/98

TILTECO INC.
TILLIT TESTING & ENGINEERING COMPANY
8545 N.W. 36th St., Ste. 217, VIRGINIA GARDENS, Fl. 33166
Phone : (305)871-1530 . Fax : (305)871-1531
WALTER A. TILLIT Jr., P. E.
FLORIDA Lic. # 44187

ROLL-UP SHUTTER WITH SAR/155A SLAT

AMERICAN SHUTTER PRODUCTS, INC.
8360 TOPAZ COURT
FORT MYERS, FLORIDA 33912

REV. No	DESCRIPTION	DATE	REV. No	DESCRIPTION	DATE
1	GENERAL	2/16/98	3		
2	–	–	4		

SCALE –
DATE 5/22/96
DRAWING No 96 – 150
SHEET 1 OF 11

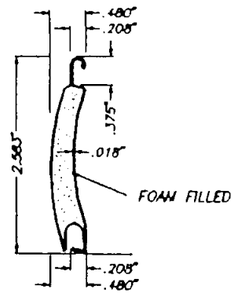

(A) TYPE 1 SLAT:
SHEET METAL ALUMINUM SLAT – FOAM FILLED – SAR/155A
3005-H48 ALUMINUM ALLOY
NOTE: SLATS SHALL BE USED W/ END (NYLON) PLUGS PROVIDED BY A. S. P.
SCALE: 1/2" = 1"

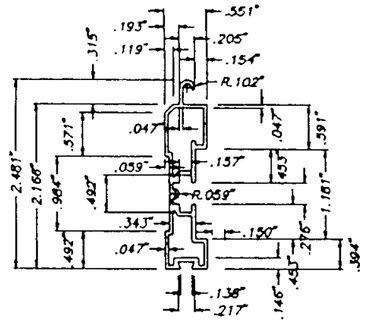

(A1) TYPE 2 SLAT:
EXTRUDED ALUMINUM SLAT – BOTTOM SLAT
6063-T6 ALUMINUM ALLOY
NOTE: SLATS SHALL BE USED W/ END (NYLON) PLUGS PROVIDED BY A. S. P.
SCALE: 1/2" = 1"

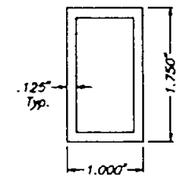

(B) TYPE 1 STORM BAR:
1-3/4" EXTRUDED STORM BAR
6063-T6 ALUMINUM ALLOY
SCALE: 1/2" = 1"

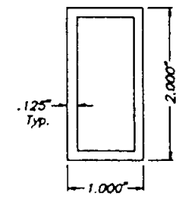

(C) TYPE 2 STORM BAR:
1" x 2" EXTRUDED STORM BAR
6063-T6 ALUMINUM ALLOY
SCALE: 1/2" = 1"

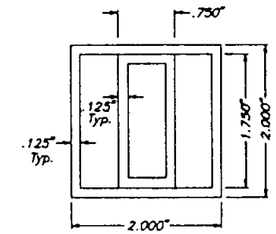

(D) TYPE 3 STORM BAR:
2" x 2" EXTRUDED STORM BAR
6063-T6 ALUMINUM ALLOY
SCALE: 1/2" = 1"

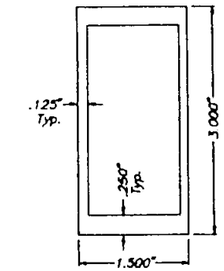

(E) TYPE 4 STORM BAR:
1-1/2" x 3" EXTRUDED STORM BAR
6061-T6 OR 6005-T5 ALUMINUM ALLOY
SCALE: 1/2" = 1"

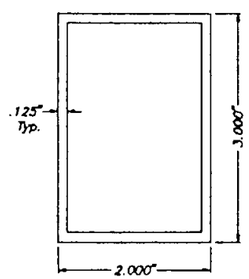

(F) TYPE 5 STORM BAR:
2" x 3" EXTRUDED STORM BAR
6063-T6 ALUMINUM ALLOY
SCALE: 1/2" = 1"

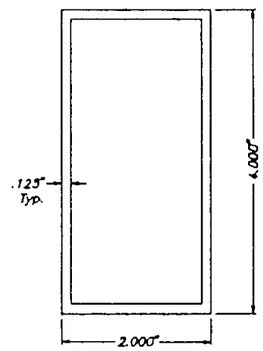

(G) TYPE 6 STORM BAR:
4" EXTRUDED STORM BAR
6063-T6 ALUMINUM ALLOY
SCALE: 1/2" = 1"

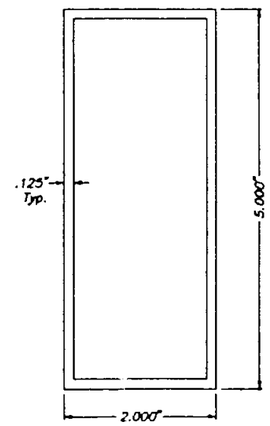

(H) TYPE 7 STORM BAR:
5" EXTRUDED STORM BAR
6063-T6 ALUMINUM ALLOY
SCALE: 1/2" = 1"

PRODUCT RENEWED
ACCEPTANCE No. 02-0102.02
EXPIRATION DATE February 19, 2007
By
PRODUCT CONTROL DIVISION
BUILDING CODE COMPLIANCE OFFICE

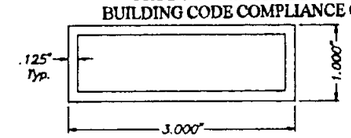

(I) TYPE 1 HEADER:
1" x 3" EXTRUDED HEADER
6063-T6 ALUMINUM ALLOY
SCALE: 1/2" = 1"

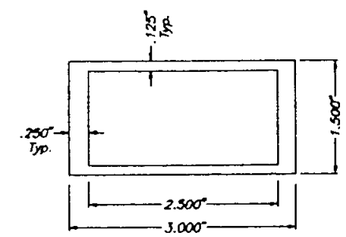

(J) TYPE 2 HEADER:
2" x 3" EXTRUDED HEADER
6061-T6 OR 6005-T5 ALUMINUM ALLOY
SCALE: 1/2" = 1"

PRODUCT RENEWED
ACCEPTANCE No. 99-0120.02
EXPIRATION DATE February 19 2002
By
PRODUCT CONTROL DIVISION
BUILDING CODE COMPLIANCE OFFICE

2/16/98

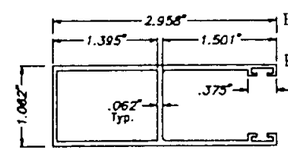

(P) TYPE 1 SIDE RAILS:
6063-T6 Alum. ALLOY
NOTE: SIDE RAIL SHALL BE USED W/ RUBBER GASKETS PROVIDED BY A. S. P.
SCALE: 1/2" = 1"

APPROVED AS COMPLYING WITH THE SOUTH FLORIDA BUILDING CODE
DATE FEBRUARY 19 1998
BY
PRODUCT CONTROL DIVISION
BUILDING CODE COMPLIANCE OFFICE
ACCEPTANCE NO. 96-0916.01

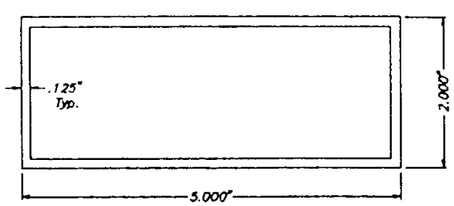

(L) TYPE 3 HEADER:
5" EXTRUDED HEADER
6063-T6 ALUMINUM ALLOY
SCALE: 1/2" = 1"

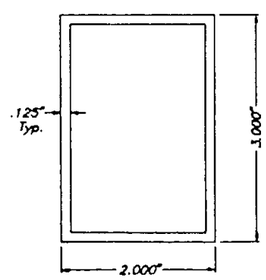

(M) TYPE 1 MULLION:
3" EXTRUDED MULLION
6063-T6 ALUMINUM ALLOY
SCALE: 1/2" = 1"

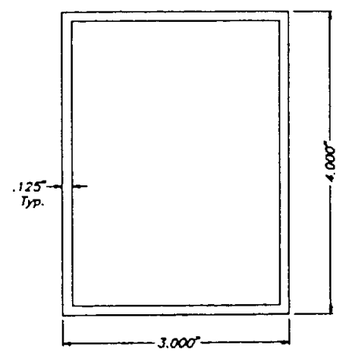

(N) TYPE 2 MULLION:
4" EXTRUDED MULLION
6063-T6 ALUMINUM ALLOY
SCALE: 1/2" = 1"

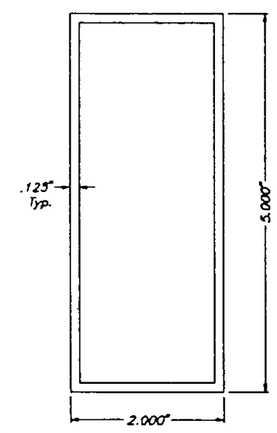

(O) TYPE 3 MULLION:
5" EXTRUDED MULLION
6063-T6 ALUMINUM ALLOY
SCALE: 1/2" = 1"

DADE COUNTY

TILTECO INC.
TILLIT TESTING & ENGINEERING COMPANY
8595 N.W. 36th. St., Ste. 217, VIRGINIA GARDENS, Fl 33166
Phone : (305)871-1530 . Fax : (305)871-1531
WALTER A. TILLIT Jr., P. E.
FLORIDA Lic. 44167

ROLL-UP SHUTTER WITH SAR/155A SLAT

AMERICAN SHUTTER PRODUCTS, INC.
6360 TOPAZ COURT
FORT MYERS, FLORIDA 33912

REV. NO	DESCRIPTION	DATE	REV. NO	DESCRIPTION	DATE
1	GENERAL	2/6/98	4		
2	–	–	5		

AS SHOWN SCALE
5/22/96 DATE
96 – 150 DRAWING No
SHEET 2 OF 11

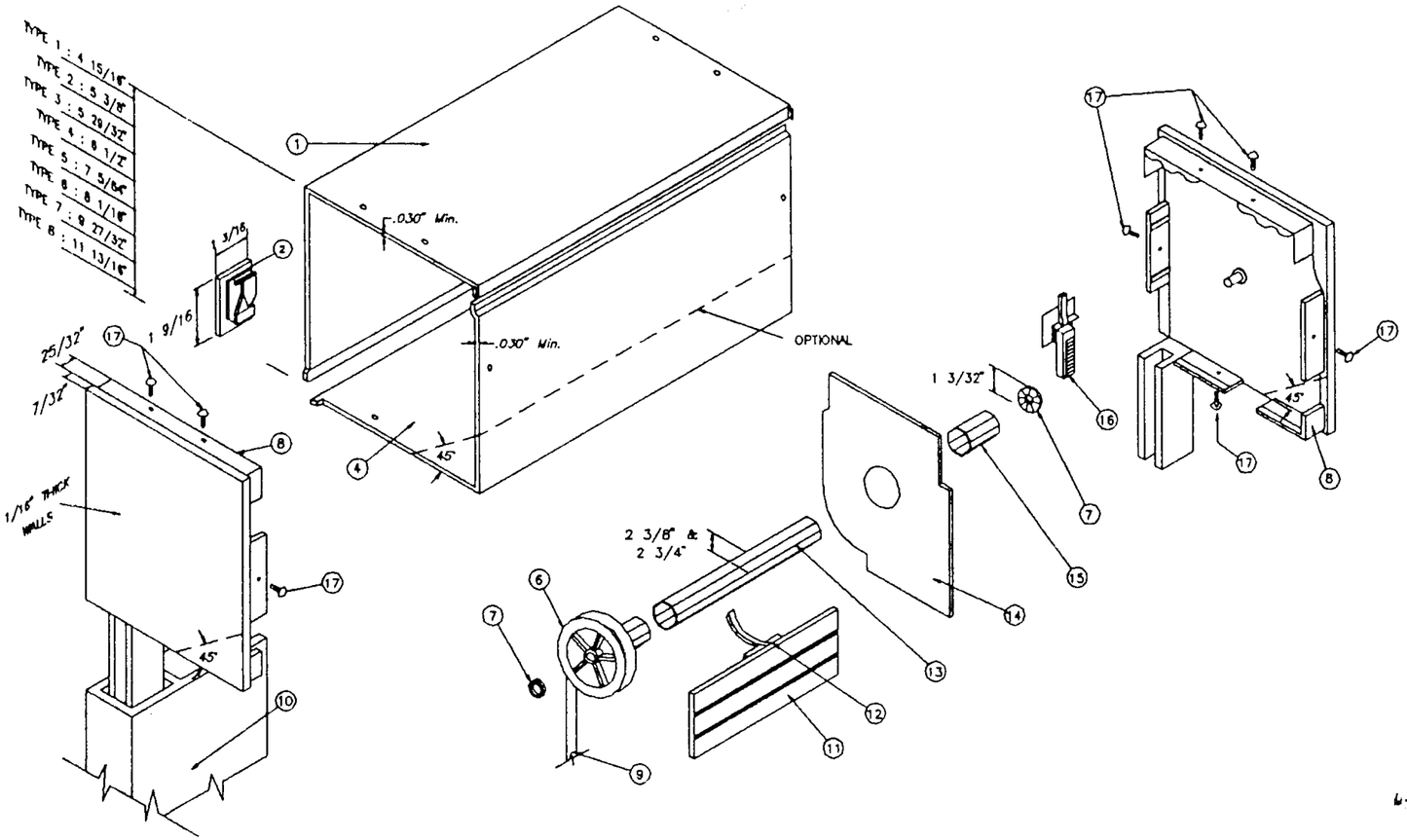

Q BOX COMPONENTS AND ASSEMBLY DETAIL

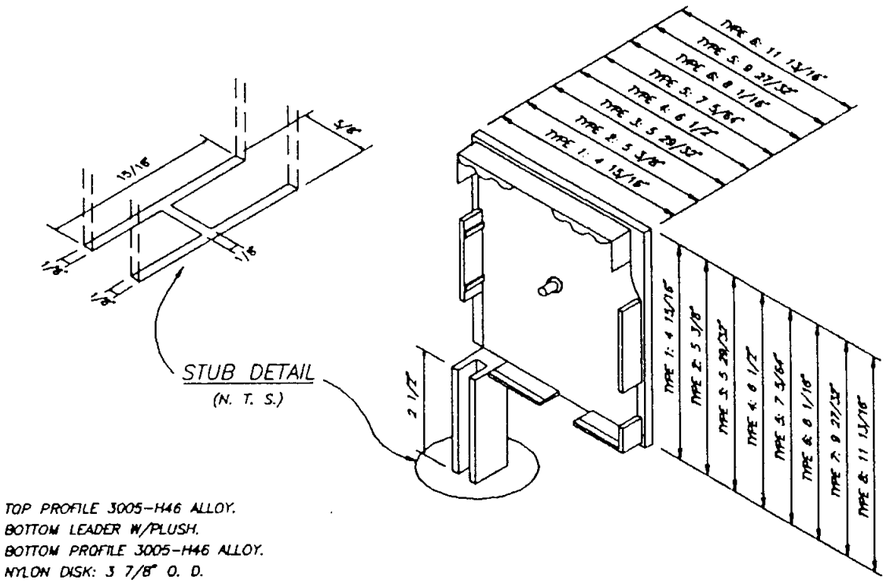

R BOX SIDE BRACKET TYPES

1. TOP PROFILE 3005-H46 ALLOY.
2. BOTTOM LEADER W/PLUSH.
4. BOTTOM PROFILE 3005-H46 ALLOY.
6. NYLON DISK: 3 7/8" O. D.
7. ROLLING CUSHION W/BALLS.
8. BOX SIDE BRACKET: CAST ALUMINUM.
9. RIBBON: 17/32" WIDE.
10. SIDE RAIL.
11. SLAT.
12. EXTRUDED ALUMINUM DRAWING HOOP.
13. GALVANIZED STEEL REEL: 2 3/8" O. D. x .024" Min. Thk. 2 3/4" O. D. x 0.047" Thk.
14. RETAINING METAL PLATE: 26 Ga. Galv. STEEL AT EACH END.
15. NYLON FERRULE: 1 17/32" O. D. x 0.045" Thk. x 4 1/16" Long.
16. NYLON FUNNEL.
17. SCREWS: # 4 x 1/2" S. S.

PRODUCT RENEWED
ACCEPTANCE No. 02-0102.02
EXPIRATION DATE February 19, 2007
By
PRODUCT CONTROL DIVISION
BUILDING CODE COMPLIANCE OFFICE

PRODUCT RENEWED
ACCEPTANCE No. 99-0120.02
EXPIRATION DATE February 19, 2002
By Manuel Perez
PRODUCT CONTROL DIVISION
BUILDING CODE COMPLIANCE OFFICE

APPROVED AS COMPLYING WITH THE SOUTH FLORIDA BUILDING CODE
DATE FEBRUARY 19 1998
BY Manuel Perez
PRODUCT CONTROL DIVISION
BUILDING CODE COMPLIANCE OFFICE
ACCEPTANCE NO. 96-0916.01

DADE COUNTY

2/16/98

TILTECO INC.
TILLIT TESTING & ENGINEERING COMPANY
6505 N.W. 36th St., Ste. 217, VIRGINIA GARDENS, Fl 33166
Phone : (305)871-1530 . Fax : (305)871-1531
WALTER A. TILLIT Jr., P. E.
FLORIDA Lic. 44167

ROLL-UP SHUTTER WITH SAR/155A SLAT

AMERICAN SHUTTER PRODUCTS, INC.
6360 TOPAZ COURT
FORT MYERS, FLORIDA 33912

REV. NO	DESCRIPTION	DATE	REV. No	DESCRIPTION	DATE
1	GENERAL	2/16/98	3		
2	–	–	4		

N. T. S.
SCALE
5/22/96
DATE
96 – 150
DRAWING No
SHEET 3 OF 11

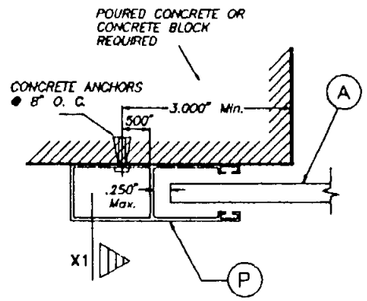

SECTION P – P (1) : WALL MOUNT

SCALE: 3/8" = 1"

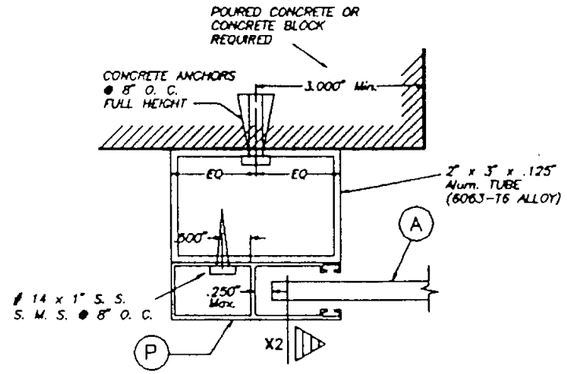

SECTION P – P (2) : BUILD-OUT

SCALE: 3/8" = 1"

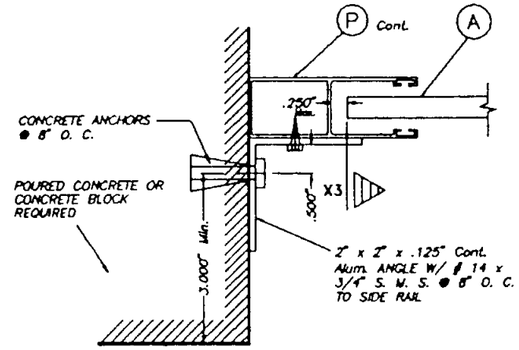

SECTION P – P (3) : SIDE WALL MOUNT

SCALE: 3/8" = 1"

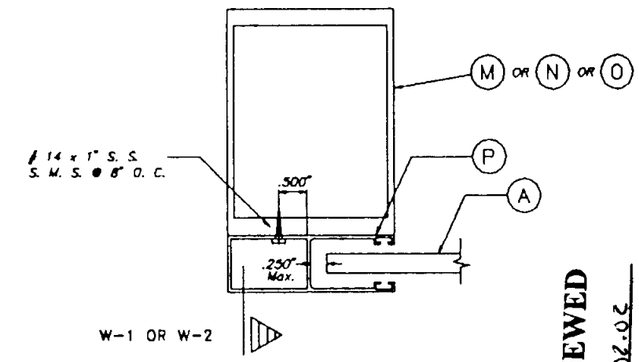

SECTION Q – Q : MULLION MOUNT

SCALE: 3/8" = 1"

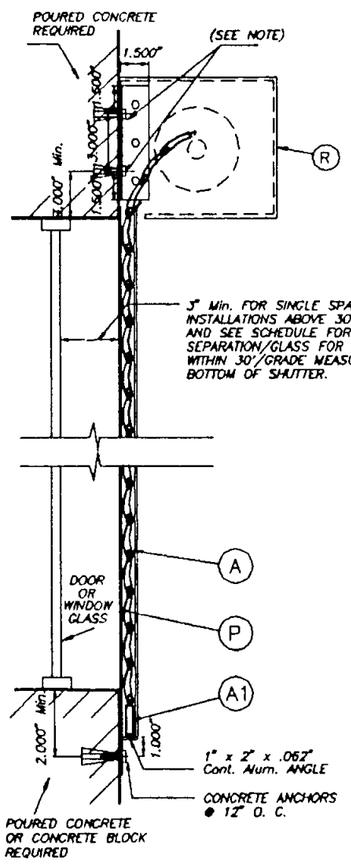

SECTION X – X (1)

N. T. S.

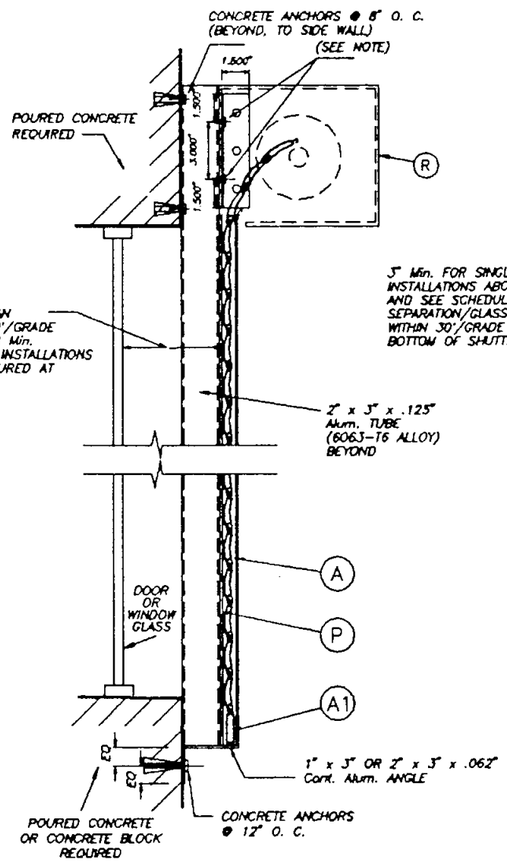

SECTION X – X (2)

N. T. S.

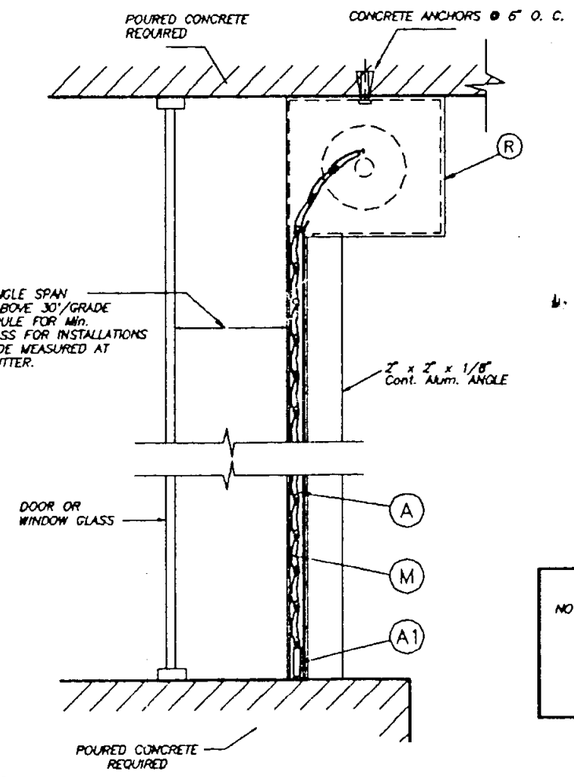

SECTION X –X (3)

N. T. S.

7/16/98

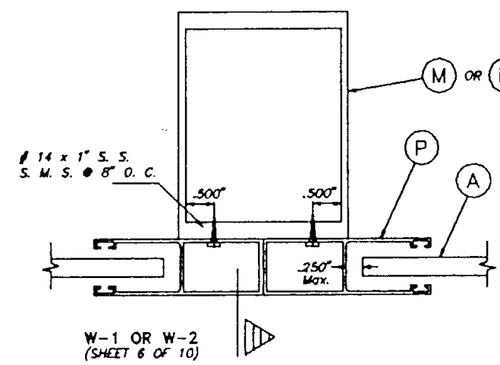

SECTION R – R : MULLION MOUNT

SCALE: 3/8" = 1"

NOTE: 1" x 1 1/2" x 0.125" x 0'-6" ALUMINUM ANGLE W/(2) 1/4" # x 2" TAPCON OR RAWL ZAMAC NAILIN ANCHORS TO WALL FOR SECTION X-X (1), AND OR (2) # 14 x 3/4" S. S. S. M. S. TO 2" x 3" x .125" Alum. TUBE (FOR SECTION X-X (2)). ATTACH ANGLE TO (R) W/ (3) 3/16" # S. S. RIVETS.

PRODUCT RENEWED
ACCEPTANCE No. 02-0102.02
EXPIRATION DATE February 19, 2007
By
PRODUCT CONTROL DIVISION
BUILDING CODE COMPLIANCE OFFICE

PRODUCT RENEWED
ACCEPTANCE No. 99-0120.02
EXPIRATION DATE February 19, 2002
By
PRODUCT CONTROL DIVISION
BUILDING CODE COMPLIANCE OFFICE

APPROVED AS COMPLYING WITH THE SOUTH FLORIDA BUILDING CODE
DATE FEBRUARY 19, 1998
BY
PRODUCT CONTROL DIVISION
BUILDING CODE COMPLIANCE OFFICE
ACCEPTANCE NO. 96-0916.01

DADE COUNTY

TILTECO INC.
TILLIT TESTING & ENGINEERING COMPANY
8505 N.W. 36th. St., Ste. 217, VIRGINIA GARDENS, Fl 33166
Phone : (305)871-1530 . Fax : (305)871-1531
WALTER A. TILLIT Jr., P. E.
FLORIDA Lic. 44167

ROLL-UP SHUTTER WITH SAR/155A SLAT

AMERICAN SHUTTER PRODUCTS, INC.
6360 TOPAZ COURT
FORT MYERS, FLORIDA 33912

REV. NO	DESCRIPTION	DATE	REV. No	DESCRIPTION	DATE
1	GENERAL	2/6/98	3		
2	–	–	4		

AS SHOWN SCALE

5/22/96 DATE

96 – 150 DRAWING No

SHEET 4 OF 11

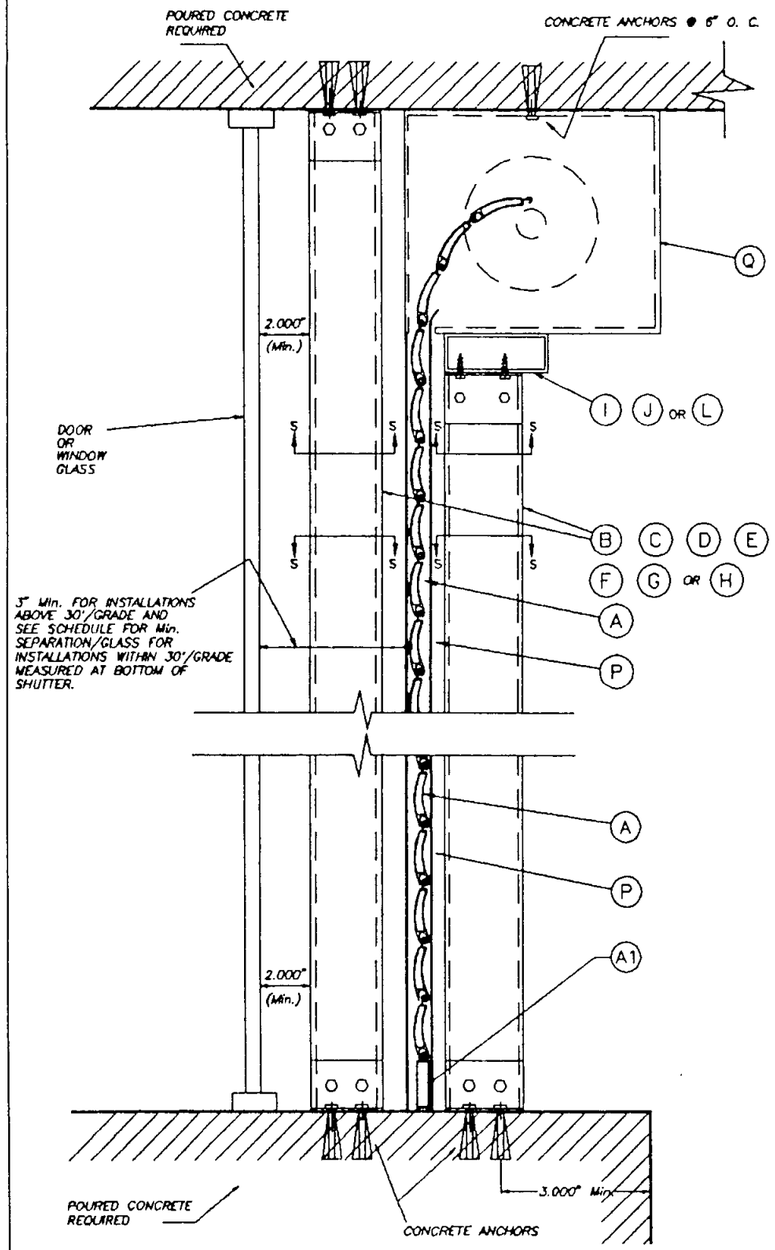

CEILING & FLOOR MOUNTING :
SECTION V – V (1)

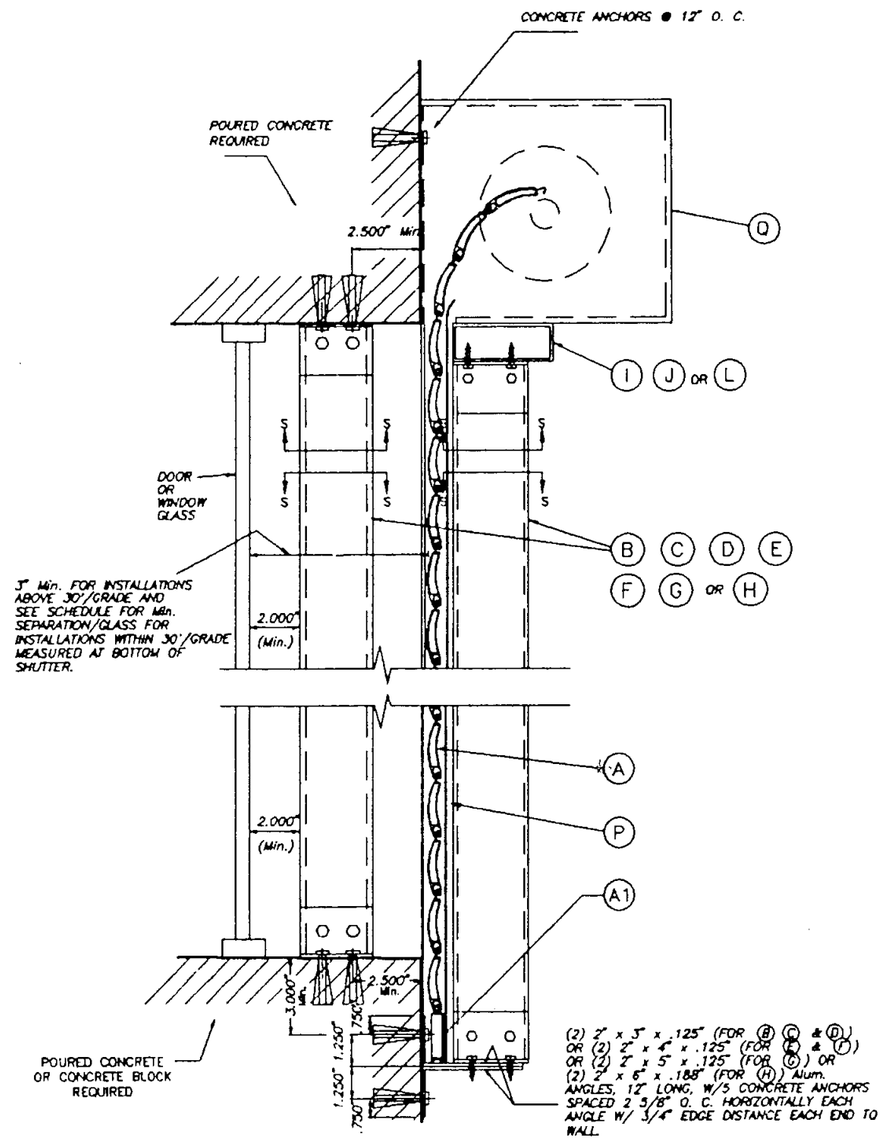

WALL MOUNTING : SECTION V – V (2)

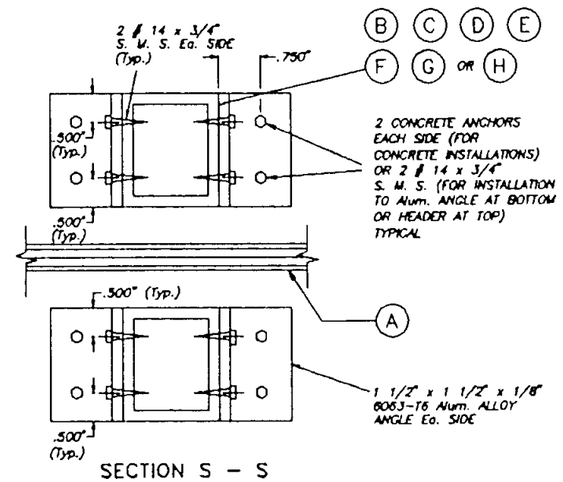

SECTION S – S

PRODUCT RENEWED

ACCEPTANCE No. 07-0102.02

EXPIRATION DATE February 19, 2007

By

PRODUCT CONTROL DIVISION
BUILDING CODE COMPLIANCE OFFICE

PRODUCT RENEWED

ACCEPTANCE No. 99-0120-02

EXPIRATION DATE February 19-2002

By

PRODUCT CONTROL DIVISION
BUILDING CODE COMPLIANCE OFFICE

APPROVED AS COMPLYING WITH THE
SOUTH FLORIDA BUILDING CODE
DATE FEBRUARY 19, 1998
BY
PRODUCT CONTROL DIVISION
BUILDING CODE COMPLIANCE OFFICE
ACCEPTANCE NO. 96-0916.01

DADE COUNTY

2/16/98

TILTECO INC.
TILLIT TESTING & ENGINEERING COMPANY
8505 N.W. 36th. St., Ste. 217, VIRGINIA GARDENS, Fl 33166
Phone : (305)871-1530 . Fax : (305)871-1531
WALTER A. TILLIT Jr., P. E.
FLORIDA Lic. 44187

ROLL-UP SHUTTER WITH SAR/155A SLAT

AMERICAN SHUTTER PRODUCTS, INC.
6380 TOPAZ COURT
FORT MYERS, FLORIDA 33912

REV. NO	DESCRIPTION	DATE	REV. No	DESCRIPTION	DATE
1	GENERAL	2/6/98	3		
2	–	–	4		

SCALE –
DATE 5/22/96
DRAWING No 96 – 150
SHEET 5 OF 11

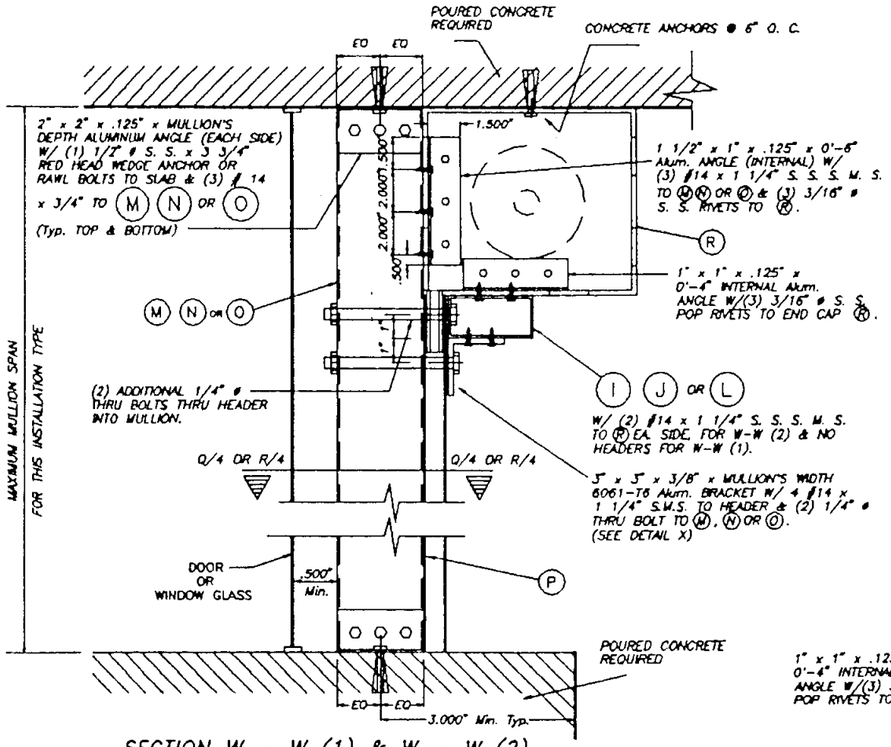

SECTION W – W (1) & W – W (2)

N. T. S.

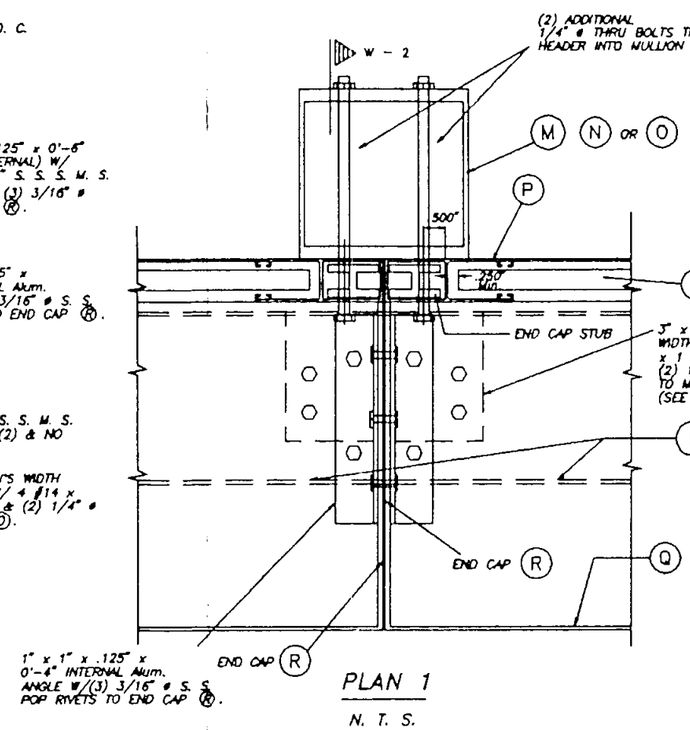

PLAN 1

N. T. S.

PRODUCT RENEWED

ACCEPTANCE No. 02-0102.02

EXPIRATION DATE February 19, 2007

By

PRODUCT CONTROL DIVISION
BUILDING CODE COMPLIANCE OFFICE

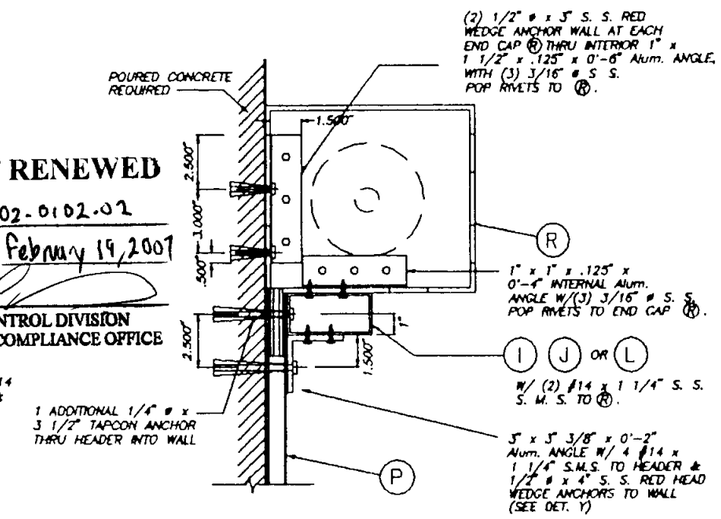

WALL MOUNTING :

SECTION W – W (3)

N. T. S.

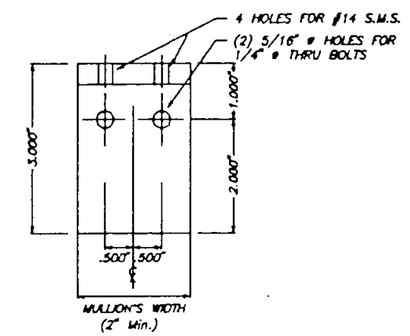

DETAIL X (ELEVATION)

SCALE: 3/8" = 1"

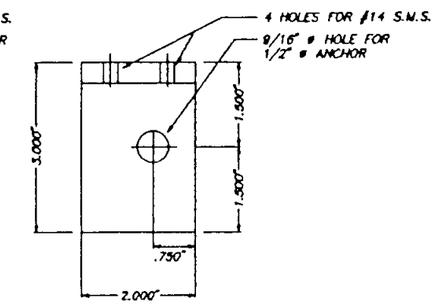

DETAIL Y (ELEVATION)

SCALE: 3/8" = 1"

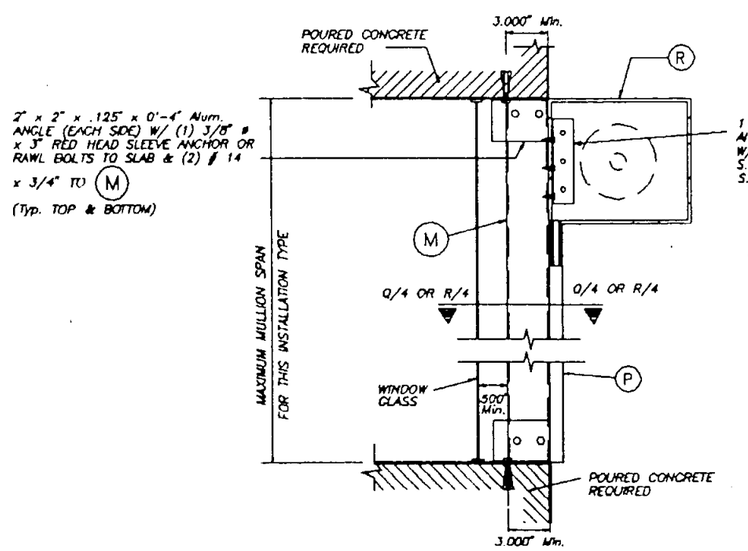

SECTION W – W (1) : VALID ONLY WHEN MULLION (M) IS USED.

N. T. S.

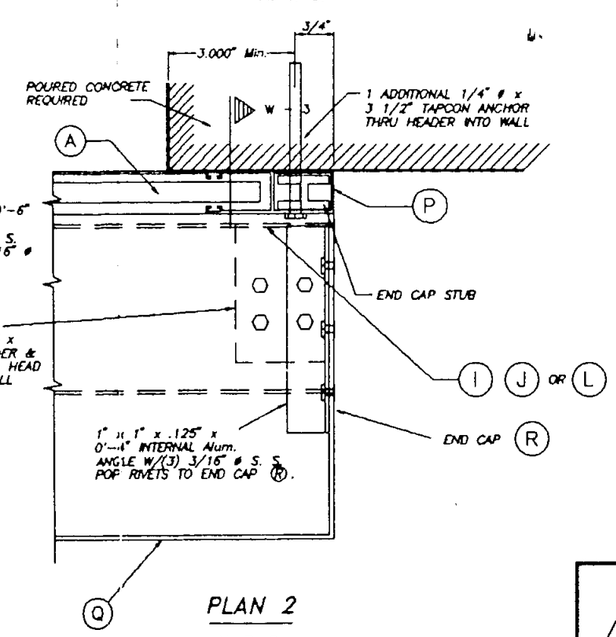

PLAN 2

N. T. S.

2/16/98

PRODUCT RENEWED

ACCEPTANCE No. 99-0120.02

EXPIRATION DATE February 19, 2002

By

PRODUCT CONTROL DIVISION
BUILDING CODE COMPLIANCE OFFICE

APPROVED AS COMPLYING WITH THE SOUTH FLORIDA BUILDING CODE

DATE FEBRUARY 19, 1998

BY

PRODUCT CONTROL DIVISION
BUILDING CODE COMPLIANCE OFFICE

ACCEPTANCE NO. 96-0916.01

DADE COUNTY

TILTECO INC.
TILLIT TESTING & ENGINEERING COMPANY
8895 N.W. 34th. St., Ste. 217, VIRGINIA GARDENS, Fl. 33166
Phone : (305)871-1530 . Fax : (305)871-1631
WALTER A. TILLIT Jr., P. E.
FLORIDA Lic. 44167

ROLL-UP SHUTTER WITH SAR/155A SLAT

AMERICAN SHUTTER PRODUCTS, INC.
6360 TOPAZ COURT
FORT MYERS, FLORIDA 33912

REV. NO	DESCRIPTION	DATE	REV. No	DESCRIPTION	DATE
1	GENERAL	2/6/98	3		
2	–	–	4		

AS SHOWN SCALE

5/22/96 DATE

96 – 150 DRAWING No

SHEET 6 OF 11

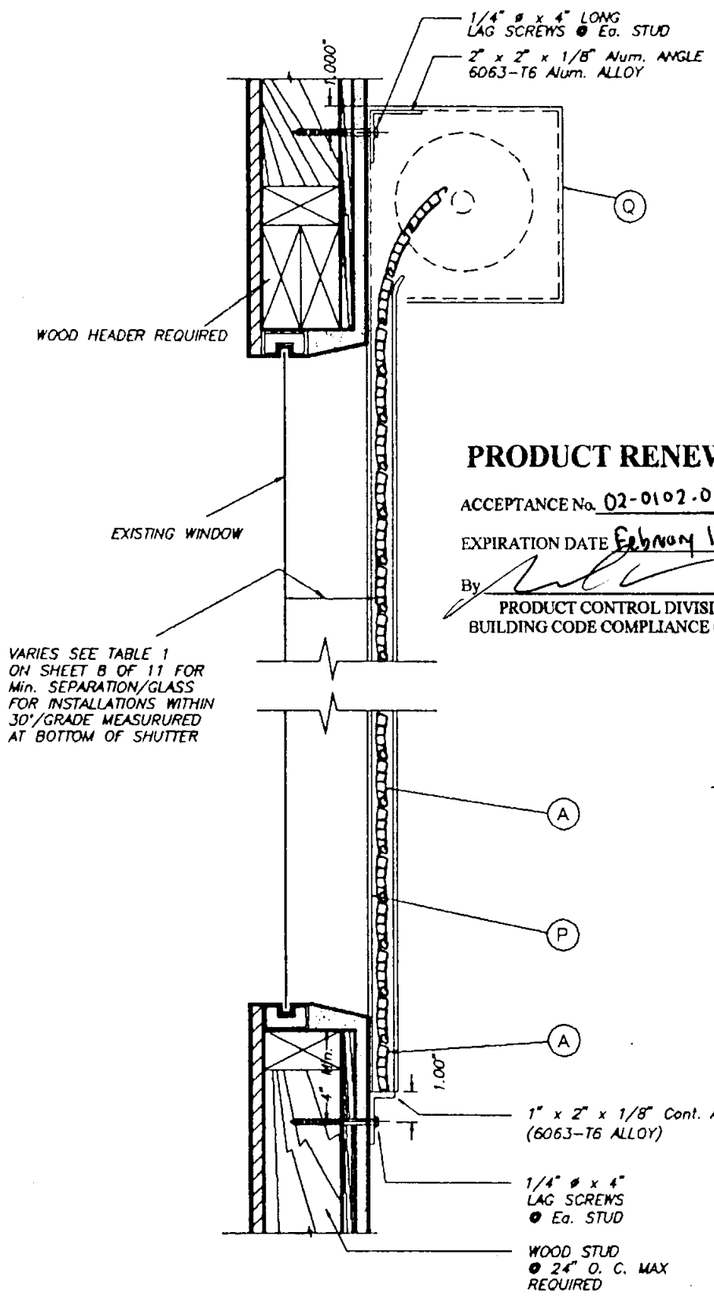

WALL MOUNTING INSTALLATION

SINGLE SPAN CONDITION

N. T. S.

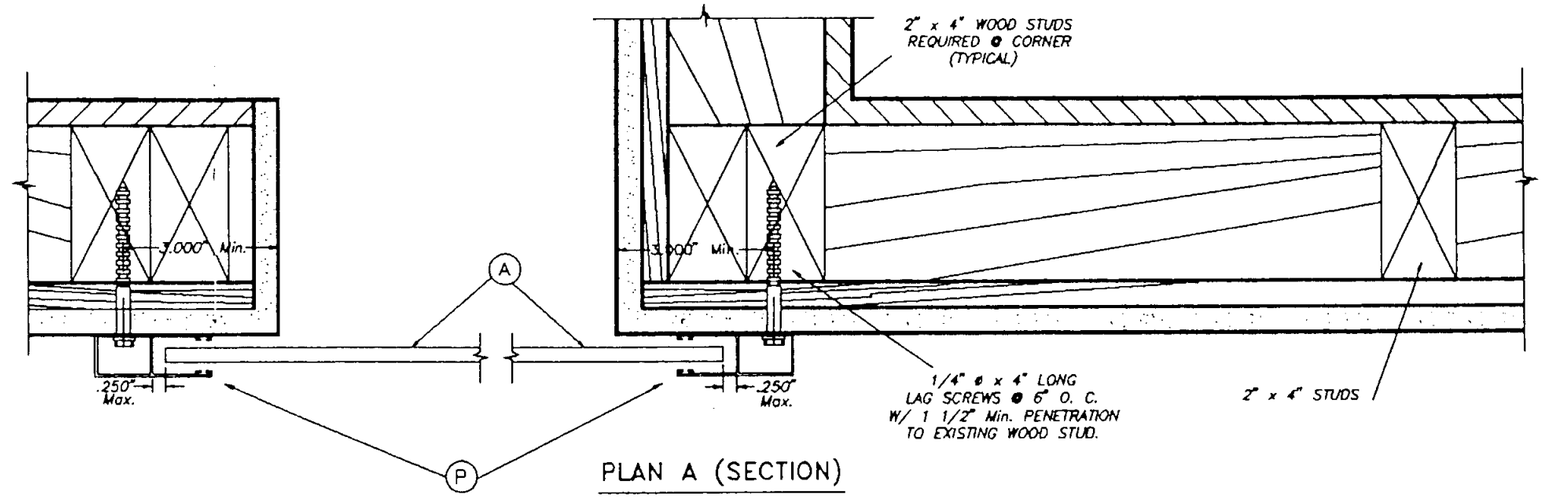

PLAN A (SECTION)

WALL MOUNT

N. T. S.

PRODUCT RENEWED

ACCEPTANCE No. 02-0102.02

EXPIRATION DATE February 19, 2007

By

PRODUCT CONTROL DIVISION
BUILDING CODE COMPLIANCE OFFICE

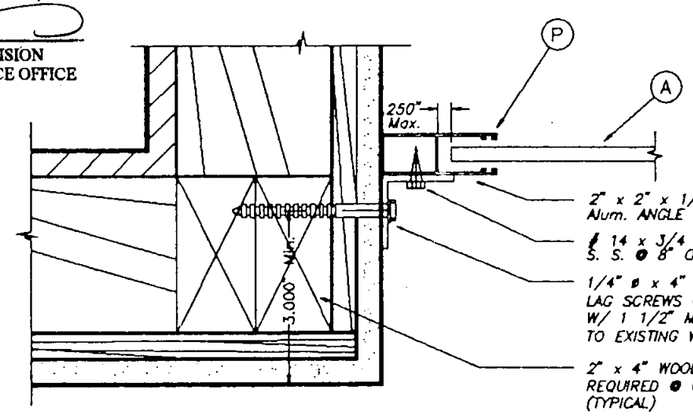

PLAN B (SECTION)

INSIDE MOUNT

N. T. S.

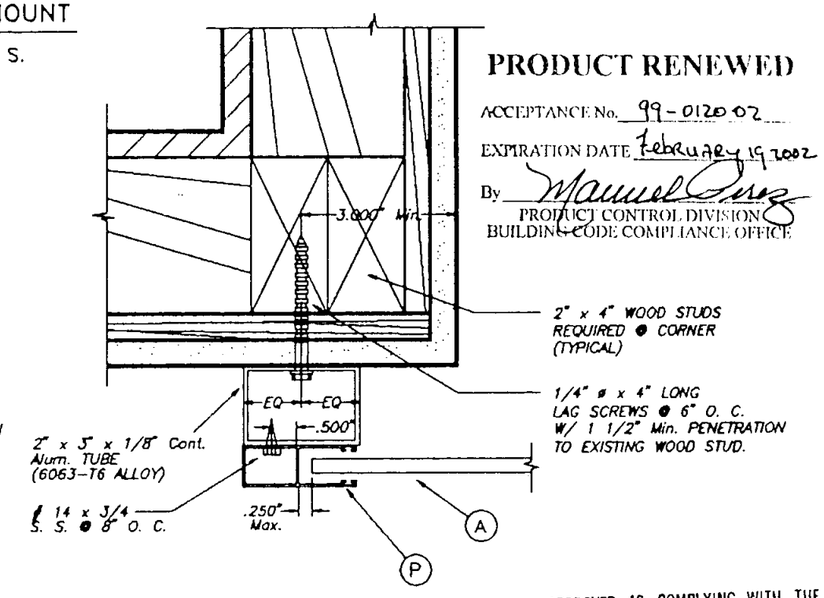

PLAN C

(BUILD-OUT)

N. T. S.

PRODUCT RENEWED

ACCEPTANCE No. 99-0120.02

EXPIRATION DATE February 19 2002

By

PRODUCT CONTROL DIVISION
BUILDING CODE COMPLIANCE OFFICE

NOTES:

1. INSTALLATIONS ARE ONLY VALID FOR BUILDINGS WITH MEAN ROOF HEIGHT LESS OR EQUAL THAN 30 FEET.
2. FOR NEW FRAME CONSTRUCTION: WOOD MEMBER TO BE SOUTHERN PINE No. 2 W/ SPECIFIC DENSITY OF 0.55 OR EQUAL.
3. MINIMUM PENETRATION OF LAG SCREWS INTO WOOD MEMBER TO BE 1 1/2".

APPROVED AS COMPLYING WITH THE SOUTH FLORIDA BUILDING CODE

DATE FEBRUARY 19, 1998

BY

PRODUCT CONTROL DIVISION
BUILDING CODE COMPLIANCE OFFICE

ACCEPTANCE NO. 96-0916.01

2/16/98

TILTECO INC.

TILLIT TESTING & ENGINEERING COMPANY

8695 N.W. 34th St., Ste. 217, VIRGINIA GARDENS, Fl. 33166
Phone : (305)871-1530 . Fax : (305)871-1531

WALTER A. TILLIT Jr., P. E.
FLORIDA Lic. 44167

ROLL-UP SHUTTER WITH SAR/155A SLAT

AMERICAN SHUTTER PRODUCTS, INC.

8360 TOPAZ COURT
FORT MYERS, FLORIDA 33912

REV. NO	DESCRIPTION	DATE	REV. No	DESCRIPTION	DATE
1	GENERAL	2/16/98	3		
2	–	–	4		

DADE COUNTY

SCALE –

DATE 5/22/96

DRAWING No 96 – 150

SHEET 7 OF 11

SLAT PERFORMANCE CHART
MAXIMUM DESIGN PRESSURE RATING "W" (p. s. f.) AND CORRESPONDING MAXIMUM SLAT SPAN "L" FOR TYPE 1 SLAT
(USE NEGATIVE PRESSURE VALUES AS PER ASCE 7-88)

SLAT TYPE 1 Max. (US 60) DESIGN LOAD "W" (p.s.f.)	MAXIMUM SLAT SPAN		MINIMUM SEPARATION TO GLASS	
	SINGLE & MULTIPLE UNIT *	SINGLE & MULTIPLE UNIT **	SINGLE & MULTIPLE UNIT ***	SINGLE & MULTIPLE UNIT ****
40.0	4'-4"	4'-4"	5 1/2"	3"
42.5	4'-3"	4'-3"	5 1/2"	3"
45.0	4'-2"	4'-2"	4 1/2"	3"
47.5	4'-1"	4'-1"	4 1/2"	3"
50.0	4'-0"	4'-0"	4 1/2"	3"
52.5	3'-11"	3'-11"	4 1/2"	3"
55.0	3'-11"	3'-11"	4 1/2"	3"
57.5	3'-10"	3'-10"	4 1/2"	3"
60.0	3'-9"	3'-9"	4 1/2"	3"
62.5	3'-9"	3'-9"	4 1/2"	3"
65.0	3'-8"	3'-8"	4 1/2"	3"
67.5	3'-8"	3'-8"	4 1/2"	3"
70.0	3'-7"	3'-7"	4 1/2"	3"
72.5	3'-6"	3'-6"	4"	3"
75.0	3'-6"	3'-6"	4"	3"

SLAT TYPE 1 Max. (US 60) DESIGN LOAD "W" (p.s.f.)	MAXIMUM SLAT SPAN		MINIMUM SEPARATION TO GLASS	
	SINGLE & MULTIPLE UNIT *	SINGLE & MULTIPLE UNIT **	SINGLE & MULTIPLE UNIT ***	SINGLE & MULTIPLE UNIT ****
77.5	3'-6"	3'-6"	4"	3"
80.0	3'-5"	3'-5"	4"	3"
82.5	3'-5"	3'-5"	4"	3"
85.0	3'-4"	3'-4"	4"	3"
87.5	3'-4"	3'-4"	4"	3"
90.0	3'-4"	3'-4"	4"	3"
92.5	3'-3"	3'-3"	4"	3"
95.0	3'-3"	3'-3"	4"	3"
97.5	3'-2"	3'-2"	4"	3"
100.0	3'-2"	3'-2"	4"	3"
102.5	3'-2"	3'-2"	4"	3"
105.0	3'-2"	3'-2"	4"	3"
107.5	3'-1"	3'-1"	4"	3"
110.0	3'-1"	3'-1"	4"	3"
112.5	3'-1"	3'-1"	4"	3"

SLAT TYPE 1 Max. (US 60) DESIGN LOAD "W" (p.s.f.)	MAXIMUM SLAT SPAN		MINIMUM SEPARATION TO GLASS	
	SINGLE & MULTIPLE UNIT *	SINGLE & MULTIPLE UNIT **	SINGLE & MULTIPLE UNIT ***	SINGLE & MULTIPLE UNIT ****
115.0	3'-0"	3'-0"	3 3/4"	3"
117.5	3'-0"	3'-0"	3 3/4"	3"
120.0	3'-0"	3'-0"	3 3/4"	3"
122.5	3'-0"	3'-0"	3 3/4"	3"
125.0	2'-11"	2'-11"	3 3/4"	3"
127.5	2'-11"	2'-11"	3 3/4"	3"
130.0	2'-11"	2'-11"	3 3/4"	3"
132.5	2'-10"	2'-10"	3 3/4"	3"
135.0	2'-10"	2'-10"	3 3/4"	3"
137.5	2'-10"	2'-10"	3 3/4"	3"
140.0	2'-9"	2'-9"	3 3/4"	3"
142.5	2'-9"	2'-9"	3 3/4"	3"
145.0	2'-9"	2'-9"	3 3/4"	3"
147.5	2'-8"	2'-8"	3 3/4"	3"
150.0	2'-8"	2'-8"	3 3/4"	3"

* SPANS VALID FOR INSTALLATIONS WITHIN THE FIRST 30'-0" ELEVATION OF BUILDING MEASURED AT BOTTOM OF SHUTTER.

** SPANS VALID FOR INSTALLATIONS LOCATED ABOVE THE FIRST 30'-0" ELEVATION OF BUILDING MEASURED AT BOTTOM OF SHUTTER.

*** MINIMUM SEPARARTION TO GLASS FOR SHUTTERS INSTALLED WITHIN THE FIRST 30'-0" ELEVATION OF BUILDING AND MAXIMUM SPAN. SEE TABLE 1 FOR Min. SEPARATION TO GLASS FOR SPANS LESS THAN Max. ALLOWED.

**** MINIMUM SEPARATION TO GLASS FOR SHUTTERS INSTALLED ABOVE 30'-0" ELEVATION OF BUILDING, MEASURED AT BOTTOM OF SHUTTER.

NOTE: MINIMUM SEPARATION TO GLASS FOR SINGLE AND MULTIPLE UNITS SHALL BE MEASURED FROM SLAT TO GLASS.

NOTE: THIS INSTALLATION CAN BE CONSTRUCTED REVERSED i. e. WITH BOX FACING WINDOW, AND CONVEX SIDE OF SLATS FACING THE EXTERIOR.

TABLE 1 : SLAT PERFORMANCE CHART

SLAT SPAN (ft)	Y Min. SEPARATION TO GLASS
> 50" TO 52"	5 1/2"
> 42" TO 50"	4 1/2"
> 36" TO 42"	4"
36" OR LESS	3 3/4"

Y FOR INSTALLATION UP TO 30' ABOVE GROUND
FOR INSTALLATION 30' ABOVE GROUND USE 3"

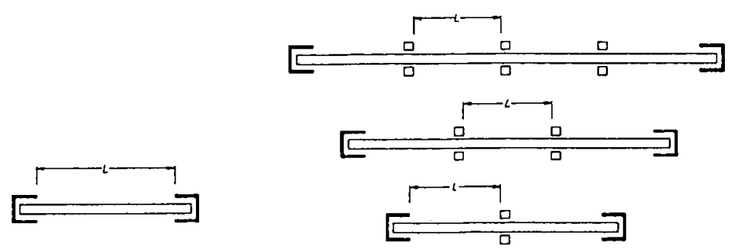

SINGLE SPAN

MULTIPLE SPAN

SPAN LAYOUT

2/16/98

PRODUCT RENEWED
ACCEPTANCE No. 02-0102.02
EXPIRATION DATE February 14, 2007
By
PRODUCT CONTROL DIVISION
BUILDING CODE COMPLIANCE OFFICE

PRODUCT RENEWED
ACCEPTANCE No. 99-0120.02
EXPIRATION DATE February 14, 2002
By Manuel Perez
PRODUCT CONTROL DIVISION
BUILDING CODE COMPLIANCE OFFICE

APPROVED AS COMPLYING WITH THE SOUTH FLORIDA BUILDING CODE
DATE FEBRUARY 19, 1998
BY Manuel Perez
PRODUCT CONTROL DIVISION
BUILDING CODE COMPLIANCE OFFICE
ACCEPTANCE NO. 96-0916.01

DADE COUNTY

TILTECO INC.
TILLIT TESTING & ENGINEERING COMPANY
6595 N.W. 34th St., Ste 217, VIRGINIA GARDENS, Fl 33166
Phone : (305)871-1530 . Fax : (305)871-1531
WALTER A. TILLIT Jr., P. E.
FLORIDA Lic. 44167

ROLL-UP SHUTTER WITH SAR/155A SLAT

AMERICAN SHUTTER PRODUCTS, INC.
6360 TOPAZ COURT
FORT MYERS, FLORIDA 33912

REV. NO	DESCRIPTION	DATE	REV. No	DESCRIPTION	DATE
1	GENERAL	2/6/98	3		
2	-	-	4		

SCALE -
DATE 5/22/96
DRAWING No 96 - 150
SHEET 8 OF 11

STORM BAR LOADING CHART

MAXIMUM DESIGN PRESSURE RATING "W" (p. s. f.) AND CORRESPONDING MAXIMUM SPAN "L" FOR A GIVEN TYPE OF STORM BAR AND STORM BAR SPACING. (USE NEGATIVE PRESSURE VALUES AS PER ASCE 7-88)

MAXIMUM DESIGN LOAD "W" (p.s.f.)	TYPE 1 STORM BAR		TYPE 2 STORM BAR		TYPE 3 STORM BAR		TYPE 4 STORM BAR		TYPE 5 STORM BAR		TYPE 6 STORM BAR		TYPE 7 STORM BAR	
	STORM BAR SPACING *		STORM BAR SPACING *		STORM BAR SPACING *		STORM BAR SPACING *		STORM BAR SPACING *		STORM BAR SPACING *		STORM BAR SPACING *	
	4'-0"	≤ 3'-0"	4'-0"	≤ 3'-0"	4'-0"	≤ 3'-0"	4'-0"	≤ 3'-0"	4'-0"	≤ 3'-0"	4'-0"	≤ 3'-0"	4'-0"	≤ 3'-0"
40.0	4'-8"	5'-5"	5'-2"	5'-10"	6'-9"	7'-3"	7'-11"	7'-11"	7'-11"	7'-11"	9'-0"	9'-0"	10'-0"	10'-0"
42.5	4'-7"	5'-3"	5'-0"	5'-10"	6'-8"	7'-2"	7'-11"	7'-11"	7'-10"	7'-11"	9'-0"	9'-0"	10'-0"	10'-0"
45.0	4'-5"	5'-1"	4'-11"	5'-8"	6'-7"	7'-0"	7'-11"	7'-11"	7'-9"	7'-11"	9'-0"	9'-0"	10'-0"	10'-0"
47.5	4'-4"	5'-0"	4'-9"	5'-6"	6'-6"	6'-11"	7'-11"	7'-11"	7'-8"	7'-11"	9'-0"	9'-0"	10'-0"	10'-0"
50.0	4'-2"	4'-10"	4'-8"	5'-4"	6'-5"	6'-10"	7'-11"	7'-11"	7'-7"	7'-11"	9'-0"	9'-0"	10'-0"	10'-0"
52.5	4'-1"	4'-9"	4'-6"	5'-3"	6'-4"	6'-9"	7'-10"	7'-11"	7'-6"	7'-11"	8'-11"	9'-0"	10'-0"	10'-0"
55.0	4'-0"	4'-7"	4'-5"	5'-1"	6'-3"	6'-8"	7'-9"	7'-11"	7'-5"	7'-11"	8'-10"	9'-0"	10'-0"	10'-0"
57.5	3'-11"	4'-6"	4'-4"	5'-0"	6'-2"	6'-7"	7'-7"	7'-11"	7'-4"	7'-10"	8'-8"	9'-0"	10'-0"	10'-0"
60.0	3'-10"	4'-5"	4'-3"	4'-11"	6'-1"	6'-7"	7'-7"	7'-11"	7'-3"	7'-9"	8'-7"	9'-0"	9'-11"	10'-0"
62.5	3'-9"	4'-4"	4'-2"	4'-9"	6'-0"	6'-6"	7'-6"	7'-11"	7'-2"	7'-8"	8'-6"	9'-0"	9'-10"	10'-0"
65.0	3'-8"	4'-3"	4'-1"	4'-8"	6'-0"	6'-5"	7'-5"	7'-11"	7'-1"	7'-7"	8'-5"	9'-0"	9'-9"	10'-0"
67.5	3'-7"	4'-2"	4'-0"	4'-7"	5'-11"	6'-4"	7'-4"	7'-10"	7'-0"	7'-6"	8'-4"	9'-0"	9'-7"	10'-0"
70.0	3'-7"	4'-1"	3'-11"	4'-6"	5'-10"	6'-4"	7'-3"	7'-10"	6'-11"	7'-6"	8'-3"	8'-11"	9'-6"	10'-0"
72.5	3'-6"	4'-0"	3'-10"	4'-5"	5'-9"	6'-3"	7'-2"	7'-9"	6'-11"	7'-5"	8'-3"	8'-10"	9'-5"	10'-0"
75.0	3'-5"	3'-11"	3'-9"	4'-4"	5'-8"	6'-2"	7'-2"	7'-8"	6'-10"	7'-4"	8'-1"	8'-9"	9'-4"	10'-0"
77.5	3'-4"	3'-11"	3'-9"	4'-4"	5'-7"	6'-2"	7'-1"	7'-7"	6'-9"	7'-3"	8'-0"	8'-8"	9'-4"	10'-0"
80.0	3'-4"	3'-10"	3'-8"	4'-3"	5'-6"	6'-1"	7'-0"	7'-7"	6'-9"	7'-3"	7'-10"	8'-7"	9'-3"	9'-11"
82.5	3'-3"	3'-9"	3'-7"	4'-2"	5'-5"	6'-1"	7'-0"	7'-6"	6'-8"	7'-2"	7'-9"	8'-7"	9'-2"	9'-10"
85.0	3'-3"	3'-9"	3'-7"	4'-1"	5'-4"	6'-0"	6'-11"	7'-5"	6'-7"	7'-1"	7'-7"	8'-6"	9'-0"	9'-9"
87.5	3'-2"	3'-8"	3'-6"	4'-1"	5'-3"	6'-0"	6'-10"	7'-5"	6'-7"	7'-1"	7'-6"	8'-5"	8'-10"	9'-8"
90.0	3'-1"	3'-7"	3'-5"	4'-0"	5'-2"	5'-11"	6'-10"	7'-4"	6'-6"	7'-0"	7'-5"	8'-4"	8'-9"	9'-7"
92.5	3'-1"	3'-7"	3'-5"	3'-11"	5'-1"	5'-11"	6'-9"	7'-3"	6'-6"	7'-0"	7'-4"	8'-4"	8'-8"	9'-7"
95.0	3'-0"	3'-6"	3'-4"	3'-11"	5'-0"	5'-10"	6'-9"	7'-3"	6'-5"	6'-11"	7'-2"	8'-3"	8'-6"	9'-6"
97.5	3'-0"	3'-6"	3'-4"	3'-10"	5'-0"	5'-9"	6'-8"	7'-2"	6'-5"	6'-10"	7'-1"	8'-2"	8'-5"	9'-5"
100.0	3'-0"	3'-5"	3'-3"	3'-9"	4'-11"	5'-8"	6'-8"	7'-2"	6'-4"	6'-10"	7'-0"	8'-1"	8'-4"	9'-4"
102.5	2'-11"	3'-5"	3'-3"	3'-9"	4'-10"	5'-7"	6'-7"	7'-1"	6'-4"	6'-9"	6'-11"	8'-0"	8'-2"	9'-4"
105.0	2'-11"	3'-4"	3'-2"	3'-8"	4'-9"	5'-6"	6'-7"	7'-1"	6'-3"	6'-9"	6'-10"	7'-11"	8'-1"	9'-3"
107.5	2'-10"	3'-4"	3'-2"	3'-8"	4'-9"	5'-6"	6'-6"	7'-0"	6'-3"	6'-8"	6'-9"	7'-10"	8'-0"	9'-2"
110.0	2'-10"	3'-3"	3'-2"	3'-7"	4'-8"	5'-5"	6'-6"	7'-0"	6'-2"	6'-8"	6'-8"	7'-9"	7'-11"	9'-2"
112.5	2'-10"	3'-3"	3'-1"	3'-7"	4'-7"	5'-4"	6'-5"	6'-11"	6'-2"	6'-8"	6'-7"	7'-8"	7'-10"	9'-0"
115.0	2'-9"	3'-2"	3'-1"	3'-6"	4'-7"	5'-3"	6'-5"	6'-11"	6'-2"	6'-7"	6'-7"	7'-7"	7'-9"	8'-11"
117.5	2'-9"	3'-2"	3'-0"	3'-6"	4'-6"	5'-3"	6'-5"	6'-10"	6'-1"	6'-7"	6'-6"	7'-6"	7'-8"	8'-10"
120.0	2'-8"	3'-1"	3'-0"	3'-5"	4'-6"	5'-2"	6'-4"	6'-10"	6'-1"	6'-6"	6'-5"	7'-5"	7'-7"	8'-9"
122.5	2'-8"	3'-1"	3'-0"	3'-5"	4'-5"	5'-1"	6'-4"	6'-9"	6'-0"	6'-6"	6'-4"	7'-4"	7'-6"	8'-8"
125.0	2'-8"	3'-1"	2'-11"	3'-5"	4'-5"	5'-1"	6'-3"	6'-9"	6'-0"	6'-5"	6'-3"	7'-3"	7'-5"	8'-7"
127.5	2'-7"	3'-0"	2'-11"	3'-4"	4'-4"	5'-0"	6'-3"	6'-9"	6'-0"	6'-5"	6'-3"	7'-2"	7'-4"	8'-6"
130.0	2'-7"	3'-0"	2'-11"	3'-4"	4'-4"	5'-0"	6'-3"	6'-8"	5'-11"	6'-5"	6'-2"	7'-1"	7'-3"	8'-5"
132.5	2'-7"	3'-0"	2'-10"	3'-3"	4'-3"	4'-11"	6'-2"	6'-8"	5'-11"	6'-4"	6'-1"	7'-1"	7'-3"	8'-4"
135.0	2'-7"	2'-11"	2'-10"	3'-3"	4'-3"	4'-10"	6'-2"	6'-7"	5'-11"	6'-4"	6'-1"	7'-0"	7'-2"	8'-3"
137.5	2'-6"	2'-11"	2'-10"	3'-3"	4'-2"	4'-10"	6'-2"	6'-7"	5'-10"	6'-4"	6'-0"	6'-11"	7'-1"	8'-2"
140.0	2'-6"	2'-11"	2'-9"	3'-2"	4'-2"	4'-9"	6'-1"	6'-7"	5'-10"	6'-3"	5'-11"	6'-10"	7'-0"	8'-1"
142.5	2'-6"	2'-10"	2'-9"	3'-2"	4'-1"	4'-9"	6'-0"	6'-6"	5'-10"	6'-3"	5'-11"	6'-9"	6'-11"	8'-0"
145.0	2'-6"	2'-10"	2'-9"	3'-2"	4'-1"	4'-8"	6'-0"	6'-6"	5'-9"	6'-3"	5'-10"	6'-9"	6'-11"	8'-0"
147.5	2'-5"	2'-10"	2'-8"	3'-1"	4'-0"	4'-8"	5'-11"	6'-6"	5'-9"	6'-2"	5'-9"	6'-8"	6'-10"	7'-11"
150.0	2'-5"	2'-10"	2'-8"	3'-1"	4'-0"	4'-7"	5'-11"	6'-5"	5'-9"	6'-2"	5'-9"	6'-7"	6'-9"	7'-10"

* STORM BAR SPACING SHALL BE SUCH THAT MAXIMUM SLAT SPAN SHALL NOT BE EXCEEDED.

PRODUCT RENEWED

ACCEPTANCE No. 02-0102.02

EXPIRATION DATE February 19, 2007

By

PRODUCT CONTROL DIVISION
BUILDING CODE COMPLIANCE OFFICE

PRODUCT RENEWED

ACCEPTANCE No. 99-0120.02

EXPIRATION DATE February 19 2002

By Manuel Sierra

PRODUCT CONTROL DIVISION
BUILDING CODE COMPLIANCE OFFICE

APPROVED AS COMPLYING WITH THE SOUTH FLORIDA BUILDING CODE

DATE FEBRUARY 19 1998

BY Manuel Sierra

PRODUCT CONTROL DIVISION
BUILDING CODE COMPLIANCE OFFICE

ACCEPTANCE NO. 96-0916.01

DADE COUNTY

Walter A. Tillit 7/10/98

TILLITECO INC.
TILLIT TESTING & ENGINEERING COMPANY
6595 N.W. 34th. St., Ste. 217, VIRGINIA GARDENS, Fl. 33166
Phone : (305)871-1530 . Fax : (305)871-1531
WALTER A. TILLIT Jr., P. E.
FLORIDA Lic. 44167

ROLL-UP SHUTTER WITH SAR/155A SLAT

AMERICAN SHUTTER PRODUCTS. INC.
6360 TOPAZ COURT
FORT MYERS, FLORIDA 33912

REV. NO	DESCRIPTION	DATE	REV. No	DESCRIPTION	DATE
1	TYPE 7-STORM B.	2/6/97	3		
2	–	–	4		

SCALE –

DATE 5/22/96

DRAWING No 96 – 150

SHEET 9 OF 11

HEADER LOADING CHART

MAXIMUM DESIGN PRESSURE RATING "W" (p. s. f.) AND CORRESPONDING MAXIMUM SPAN "L" (Ft.) FOR A GIVEN TYPE OF HEADER AND STORM BAR HEIGHT (Ft.) (USE NEGATIVE PRESSURE VALUES AS PER ASCE 7-88)

MAXIMUM DESIGN LOAD "W" (p.s.f)	TYPE 1 HEADER		TYPE 2 HEADER		TYPE 3 HEADER		
	STORM BAR HEIGHT		STORM BAR HEIGHT		STORM BAR HEIGHT		
	< 5'-0"	> 5' TO 8'	< 5'-0"	> 5' TO 8'	< 5'-0"	> 5' TO 8'	> 8' TO 10'
40.0	9'-2"	7'-3"	11'-10"	10'-6"	15'-6"	13'-2"	11'-9"
42.5	8'-10"	7'-0"	11'-8"	10'-4"	15'-3"	12'-9"	11'-5"
45.0	8'-7"	6'-10"	11'-6"	10'-2"	15'-1"	12'-5"	11'-1"
47.5	8'-5"	6'-8"	11'-4"	10'-1"	14'-10"	12'-1"	10'-9"
50.0	8'-2"	6'-6"	11'-2"	9'-11"	14'-8"	11'-9"	10'-6"
52.5	8'-0"	6'-4"	11'-0"	9'-10"	14'-6"	11'-6"	10'-3"
55.0	7'-9"	6'-2"	10'-11"	9'-8"	14'-2"	11'-3"	10'-0"
57.5	7'-7"	6'-0"	10'-9"	9'-7"	13'-10"	11'-0"	9'-10"
60.0	7'-5"	5'-11"	10'-8"	9'-6"	13'-7"	10'-9"	9'-7"
62.5	7'-4"	5'-9"	10'-7"	9'-4"	13'-4"	10'-6"	9'-5"
65.0	7'-2"	5'-8"	10'-5"	9'-2"	13'-0"	10'-4"	9'-3"
67.5	7'-0"	5'-7"	10'-4"	9'-0"	12'-10"	10'-1"	9'-1"
70.0	6'-11"	5'-6"	10'-3"	8'-10"	12'-7"	9'-11"	8'-11"
72.5	6'-9"	5'-4"	10'-2"	8'-8"	12'-4"	9'-9"	8'-9"
75.0	6'-8"	5'-3"	10'-1"	8'-6"	12'-2"	9'-7"	8'-7"
77.5	6'-7"	5'-2"	10'-0"	8'-4"	11'-11"	9'-5"	8'-5"
80.0	6'-6"	5'-1"	9'-11"	8'-3"	11'-9"	9'-4"	8'-4"
82.5	6'-4"	5'-0"	9'-10"	8'-1"	11'-7"	9'-2"	8'-2"
85.5	6'-3"	4'-11"	9'-9"	8'-0"	11'-5"	9'-0"	8'-1"
87.5	6'-2"	4'-11"	9'-8"	7'-11"	11'-3"	8'-11"	7'-11"
90.0	6'-1"	4'-10"	9'-8"	7'-9"	11'-1"	8'-9"	7'-10"
92.5	6'-0"	4'-9"	9'-7"	7'-8"	10'-11"	8'-8"	7'-9"
95.0	5'-11"	4'-8"	9'-6"	7'-7"	10'-9"	8'-6"	7'-8"
97.5	5'-10"	4'-8"	9'-5"	7'-6"	10'-8"	8'-5"	7'-6"
100.0	5'-9"	4'-7"	9'-4"	7'-4"	10'-6"	8'-4"	7'-5"
102.5	5'-8"	4'-6"	9'-3"	7'-3"	10'-5"	8'-3"	7'-4"
105.0	5'-8"	4'-5"	9'-1"	7'-2"	10'-3"	8'-1"	7'-3"
107.5	5'-7"	4'-5"	9'-0"	7'-1"	10'-2"	8'-0"	7'-2"
110.0	5'-6"	4'-4"	8'-11"	7'-0"	10'-0"	7'-11"	7'-1"
112.5	5'-5"	4'-4"	8'-9"	6'-11"	9'-11"	7'-10"	7'-0"
115.0	5'-5"	4'-3"	8'-8"	6'-10"	9'-10"	7'-9"	6'-11"
117.5	5'-4"	4'-3"	8'-7"	6'-10"	9'-8"	7'-8"	6'-10"
120.0	5'-3"	4'-2"	8'-6"	6'-9"	9'-7"	7'-7"	6'-9"
122.5	5'-3"	4'-2"	8'-5"	6'-8"	9'-6"	7'-6"	6'-9"
125.0	5'-2"	4'-1"	8'-4"	6'-7"	9'-5"	7'-5"	6'-8"
127.5	5'-1"	4'-1"	8'-3"	6'-6"	9'-4"	7'-4"	6'-7"
130.0	5'-1"	4'-0"	8'-2"	6'-6"	9'-3"	7'-3"	6'-6"
132.5	5'-0"	4'-0"	8'-1"	6'-5"	9'-2"	7'-3"	6'-6"
135.0	5'-0"	3'-11"	8'-0"	6'-4"	9'-1"	7'-2"	6'-5"
137.5	4'-11"	3'-11"	7'-11"	6'-3"	9'-0"	7'-1"	6'-4"
140.0	4'-11"	3'-10"	7'-11"	6'-3"	8'-11"	7'-0"	6'-3"
142.5	4'-10"	3'-10"	7'-10"	6'-2"	8'-10"	7'-0"	6'-3"
145.0	4'-10"	3'-10"	7'-9"	6'-1"	8'-9"	6'-11"	6'-2"
147.5	4'-9"	3'-9"	7'-8"	6'-1"	8'-8"	6'-10"	6'-1"
150.0	4'-9"	3'-9"	7'-7"	6'-0"	8'-7"	6'-9"	6'-1"

PRODUCT RENEWED
ACCEPTANCE No. 02-0102.02
EXPIRATION DATE February 19, 2007
By
PRODUCT CONTROL DIVISION
BUILDING CODE COMPLIANCE OFFICE

PRODUCT RENEWED
ACCEPTANCE No. 99-0120-02
EXPIRATION DATE February 19 2002
By
PRODUCT CONTROL DIVISION
BUILDING CODE COMPLIANCE OFFICE

APPROVED AS COMPLYING WITH THE SOUTH FLORIDA BUILDING CODE
DATE FEBRUARY 19, 1998
BY
PRODUCT CONTROL DIVISION
BUILDING CODE COMPLIANCE OFFICE
ACCEPTANCE NO. 96-0916.01

DADE COUNTY

MAXIMUM NEGATIVE DESIGN PRESSURE RATING "W" (p. s. f.) AND CORRESPONDING MAXIMUM ANCHOR SPACING (in.) SCHEDULE

MAXIMUM DESIGN LOAD "W" (p.s.f.)	TO CONCRETE WALL	TO MASONRY WALL
FROM 40.0 TO 150.0	8" O. C.	8" O. C.

2/16/98

TILTECO INC.
TILLIT TESTING & ENGINEERING COMPANY
6505 N.W. 36th St., Ste. 217, VIRGINIA GARDENS, Fl. 33166
Phone : (305)871-1330 . Fax : (305)871-1531
WALTER A. TILLIT Jr., P. E.
FLORIDA Lic. 44167

ROLL-UP SHUTTER WITH SAR/155A SLAT

AMERICAN SHUTTER PRODUCTS, INC.
6360 TOPAZ COURT
FORT MYERS, FLORIDA 33912

REV. NO	DESCRIPTION	DATE	REV. No	DESCRIPTION	DATE
1	GENERAL	2/6/98	3		
2	-	-	4		

SCALE -
DATE 5/22/96
DRAWING No 96 - 150
SHEET 10 OF 11

MULLION LOADING CHART

MAXIMUM DESIGN PRESSURE RATING "W" (p. s. f.) AND CORRESPONDING MAXIMUM SPAN "L" (Ft.) FOR A GIVEN TYPE OF MULLION AND MULLION SPACING.

(USE NEGATIVE PRESSURE VALUES AS PER ASCE 7-88)

MAXIMUM DESIGN LOAD "W" (p.s.f.)	TYPE 1 MULLION 3" EXTRUDED MULLION			TYPE 2 MULLION 4" EXTRUDED MULLION				TYPE 3 MULLION 5" EXTRUDED MULLION			
	MULLION SPACING			MULLION SPACING				MULLION SPACING			
	3' OR LESS	> 3' TO 4'	> 4' TO 5'	3' OR LESS	> 3' TO 4'	> 4' TO 5'	> 5' TO 8'	3' OR LESS	> 3' TO 4'	> 4' TO 5'	> 5' TO 8'
40.0	7'-3"	6'-7"	6'-1"	9'-11"	9'-0"	9'-7"	8'-2"	10'-11"	9'-11"	10'-7"	9'-0"
42.5	7'-1"	6'-5"	6'-0"	9'-8"	8'-11"	9'-5"	8'-0"	10'-8"	9'-8"	10'-4"	8'-10"
45.0	7'-0"	6'-4"	5'-11"	9'-6"	8'-9"	9'-3"	7'-11"	10'-6"	9'-6"	10'-2"	8'-8"
47.5	6'-10"	6'-3"	5'-9"	9'-4"	8'-8"	9'-1"	7'-9"	10'-3"	9'-4"	10'-0"	8'-6"
50.0	6'-9"	6'-1"	5'-8"	9'-2"	8'-6"	8'-11"	7'-7"	10'-1"	9'-2"	9'-9"	8'-4"
52.5	6'-7"	6'-0"	5'-7"	9'-1"	8'-4"	8'-9"	7'-6"	9'-11"	9'-0"	9'-8"	8'-3"
55.0	6'-6"	5'-11"	5'-6"	8'-11"	8'-3"	8'-7"	7'-4"	9'-10"	8'-11"	9'-6"	8'-1"
57.5	6'-5"	5'-10"	5'-5"	8'-9"	8'-1"	8'-6"	7'-3"	9'-8"	8'-9"	9'-4"	8'-0"
60.0	6'-4"	5'-9"	5'-4"	8'-8"	8'-0"	8'-5"	7'-2"	9'-6"	8'-8"	9'-3"	7'-11"
62.5	6'-3"	5'-8"	5'-3"	8'-6"	7'-11"	8'-3"	7'-1"	9'-5"	8'-6"	9'-1"	7'-9"
65.0	6'-2"	5'-7"	5'-3"	8'-5"	7'-9"	8'-2"	7'-0"	9'-3"	8'-5"	9'-0"	7'-8"
67.5	6'-1"	5'-7"	5'-2"	8'-4"	7'-8"	8'-1"	6'-11"	9'-2"	8'-4"	8'-10"	7'-7"
70.0	6'-0"	5'-6"	5'-1"	8'-3"	7'-7"	7'-11"	6'-10"	9'-0"	8'-3"	8'-9"	7'-6"
72.5	5'-11"	5'-5"	5'-0"	8'-1"	7'-6"	7'-10"	6'-9"	8'-11"	8'-1"	8'-8"	7'-5"
75.0	5'-11"	5'-4"	5'-0"	8'-0"	7'-5"	7'-9"	6'-8"	8'-10"	8'-0"	8'-7"	7'-4"
77.5	5'-10"	5'-4"	4'-11"	7'-11"	7'-4"	7'-8"	6'-7"	8'-9"	7'-11"	8'-6"	7'-3"
80.0	5'-9"	5'-3"	4'-10"	7'-10"	7'-3"	7'-7"	6'-6"	8'-8"	7'-10"	8'-4"	7'-2"
82.5	5'-8"	5'-2"	4'-10"	7'-9"	7'-2"	7'-6"	6'-5"	8'-7"	7'-9"	8'-3"	7'-1"
85.0	5'-8"	5'-2"	4'-9"	7'-8"	7'-1"	7'-6"	6'-5"	8'-6"	7'-8"	8'-2"	7'-0"
87.5	5'-7"	5'-1"	4'-9"	7'-8"	7'-1"	7'-5"	6'-4"	8'-5"	7'-7"	8'-2"	6'-11"
90.0	5'-7"	5'-0"	4'-8"	7'-7"	7'-0"	7'-4"	6'-3"	8'-4"	7'-7"	8'-1"	6'-11"
92.5	5'-8"	5'-0"	4'-8"	7'-6"	6'-11"	7'-3"	6'-2"	8'-3"	7'-6"	8'-0"	6'-10"
95.0	5'-5"	4'-11"	4'-7"	7'-5"	6'-10"	7'-2"	6'-2"	8'-2"	7'-5"	7'-11"	6'-9"

MAXIMUM DESIGN LOAD "W" (p.s.f.)	TYPE 1 MULLION 3" EXTRUDED MULLION			TYPE 2 MULLION 4" EXTRUDED MULLION				TYPE 3 MULLION 5" EXTRUDED MULLION			
	MULLION SPACING			MULLION SPACING				MULLION SPACING			
	3' OR LESS	> 3' TO 4'	> 4' TO 5'	3' OR LESS	> 3' TO 4'	> 4' TO 5'	> 5' TO 8'	3' OR LESS	> 3' TO 4'	> 4' TO 5'	> 5' TO 8'
97.5	5'-5"	4'-11"	4'-7"	7'-4"	6'-10"	7'-2"	6'-1"	8'-1"	7'-4"	7'-10"	6'-8"
100.0	5'-4"	4'-10"	4'-6"	7'-4"	6'-9"	7'-1"	6'-1"	8'-0"	7'-4"	7'-9"	6'-8"
102.5	5'-4"	4'-10"	4'-6"	7'-3"	6'-8"	7'-0"	6'-0"	8'-0"	7'-3"	7'-9"	6'-7"
105.0	5'-3"	4'-9"	4'-5"	7'-2"	6'-8"	6'-11"	5'-11"	7'-11"	7'-2"	7'-8"	6'-8"
107.5	5'-3"	4'-9"	4'-5"	7'-1"	6'-7"	6'-11"	5'-11"	7'-10"	7'-1"	7'-7"	6'-8"
110.0	5'-2"	4'-9"	4'-5"	7'-1"	6'-6"	6'-10"	5'-10"	7'-9"	7'-1"	7'-6"	6'-5"
112.5	5'-2"	4'-8"	4'-4"	7'-0"	6'-6"	6'-10"	5'-10"	7'-9"	7'-0"	7'-6"	6'-5"
115.0	5'-1"	4'-8"	4'-4"	7'-0"	6'-5"	6'-9"	5'-9"	7'-8"	7'-0"	7'-5"	6'-4"
117.5	5'-1"	4'-7"	4'-3"	6'-11"	6'-5"	6'-8"	5'-9"	7'-7"	6'-11"	7'-4"	6'-4"
120.0	5'-0"	4'-7"	4'-3"	6'-10"	6'-4"	6'-8"	5'-8"	7'-7"	6'-10"	7'-4"	6'-3"
122.5	5'-0"	4'-7"	4'-3"	6'-10"	6'-4"	6'-7"	5'-8"	7'-6"	6'-10"	7'-3"	6'-3"
125.0	5'-0"	4'-6"	4'-2"	6'-9"	6'-3"	6'-7"	5'-7"	7'-5"	6'-9"	7'-3"	6'-2"
127.5	4'-11"	4'-6"	4'-2"	6'-9"	6'-3"	6'-6"	5'-7"	7'-5"	6'-9"	7'-2"	6'-2"
130.0	4'-11"	4'-6"	4'-2"	6'-8"	6'-2"	6'-6"	5'-6"	7'-4"	6'-8"	7'-1"	6'-1"
132.5	4'-11"	4'-5"	4'-1"	6'-8"	6'-2"	6'-5"	5'-6"	7'-4"	6'-8"	7'-1"	6'-1"
135.0	4'-10"	4'-5"	4'-1"	6'-7"	6'-1"	6'-5"	5'-6"	7'-3"	6'-7"	7'-0"	6'-0"
137.5	4'-10"	4'-5"	4'-1"	6'-7"	6'-1"	6'-4"	5'-5"	7'-3"	6'-7"	7'-0"	6'-0"
140.0	4'-9"	4'-4"	4'-1"	6'-6"	6'-0"	6'-4"	5'-5"	7'-2"	6'-6"	6'-11"	5'-11"
142.5	4'-9"	4'-4"	4'-0"	6'-6"	6'-0"	6'-3"	5'-4"	7'-2"	6'-6"	6'-11"	5'-11"
145.0	4'-9"	4'-4"	4'-0"	6'-5"	6'-0"	6'-3"	5'-4"	7'-1"	6'-5"	6'-10"	5'-10"
147.5	4'-9"	4'-3"	4'-0"	6'-5"	5'-11"	6'-3"	5'-4"	7'-1"	6'-5"	6'-10"	5'-10"
150.0	4'-8"	4'-3"	3'-11"	6'-4"	5'-11"	6'-2"	5'-3"	7'-0"	6'-4"	6'-9"	5'-10"

PRODUCT RENEWED
ACCEPTANCE No. 02-0102.02
EXPIRATION DATE February 19, 2007
By
PRODUCT CONTROL DIVISION
BUILDING CODE COMPLIANCE OFFICE

PRODUCT RENEWED
ACCEPTANCE No. 99-0120.02
EXPIRATION DATE February 19, 2002
By Manuel Perez
PRODUCT CONTROL DIVISION
BUILDING CODE COMPLIANCE OFFICE

APPROVED AS COMPLYING WITH THE SOUTH FLORIDA BUILDING CODE
DATE FEBRUARY 19, 1998
BY Manuel Perez
PRODUCT CONTROL DIVISION
BUILDING CODE COMPLIANCE OFFICE
ACCEPTANCE NO. 96-0916.01

DADE COUNTY

Walter A. Tillit
7/6/98

TILLIT TESTING & ENGINEERING COMPANY
6595 N.W. 36th. St., Ste. 217, VIRGINIA GARDENS, Fl. 33166
Phone : (305)871-1530 . Fax : (305)871-1531
WALTER A. TILLIT Jr., P. E.
FLORIDA Lic. 44167

ROLL-UP SHUTTER WITH SAR/155A SLAT

AMERICAN SHUTTER PRODUCTS, INC.
5360 TOPAZ COURT
FORT MYERS, FLORIDA 33912

REV. NO	DESCRIPTION	DATE	REV. No	DESCRIPTION	DATE
1	GENERAL	7/6/98	3		
2	-	-	4		

SCALE: -
DATE: 5/22/96
DRAWING No: 96 - 150
SHEET 11 OF 11