MIAMI-DADE

BUILDING CODE COMPLIANCE OFFICE (BCCO)
PRODUCT CONTROL DIVISION

MIAMI-DADE COUNTY, FLORIDA
METRO-DADE FLAGLER BUILDING
140 WEST FLAGLER STREET, SUITE 1603
MIAMI, FLORIDA 33130-1563
(305) 375-2901 FAX (305) 375-2908

NOTICE OF ACCEPTANCE (NOA)

Construction Glass Industries Corporation
7840 N.W. 62 Street
Miami, Fl. 33166

SCOPE:

This NOA is being issued under the applicable rules and regulations governing the use of construction materials. The documentation submitted has been reviewed by the BCCO and accepted by the Building Code and Product Review Committee (BCPRC) to be used in Miami Dade County and other areas where allowed by the Authority Having Jurisdiction (AHJ).

This NOA shall not be valid after the expiration date stated below. The BCCO (In Miami Dade County) and/or the AHJ (in areas other than Miami Dade County) reserve the right to have this product or material tested for quality assurance purposes. If this product or material fails to perform in the accepted manner, the manufacturer will incur the expense of such testing and the AHJ may immediately revoke, modify, or suspend the use of such product or material within their jurisdiction. BCPRC reserves the right to revoke this acceptance, if it is determined by BCCO that this product or material fails to meet the requirements of the applicable building code.

This product is approved as described herein, and has been designed to comply with the South Florida Building Code, 1994 Edition for Miami-Dade County or Florida Building Code.

DESCRIPTION: Series "238" Aluminum Designer Fixed Window

APPROVAL DOCUMENT: Drawing No. WO1-83, titled "Series-238 Aluminum Designer Fixed Window", sheets 1 through 7, prepared, signed and sealed by Humayoun Farooq, P.E., dated 12/27/01, bearing the Miami-Dade County Product Control Approval stamp with the Notice of Acceptance number and approval date by the Miami-Dade County Product Control Division.

MISSILE IMPACT RATING: Large and Small Missile Impact

LABELING: Each unit shall bear a permanent label with the manufacturer's name or logo, city, state and following statement: "Miami-Dade County Product Control Approved", unless otherwise noted herein.

RENEWAL of this NOA shall be considered after a renewal application has been filed and there has been no change in the applicable building code negatively affecting the performance of this product.

TERMINATION of this NOA will occur after the expiration date or if there has been a revision or change in the materials, use, and/or manufacture of the product or process. Misuse of this NOA as an endorsement of any product, for sales, advertising or any other purposes shall automatically terminate this NOA. Failure to comply with any section of this NOA shall be cause for termination and removal of NOA.

ADVERTISEMENT: The NOA number preceded by the words Miami-Dade County, Florida, and followed by the expiration date may be displayed in advertising literature. If any portion of the NOA is displayed, then it shall be done in its entirety.

INSPECTION: A copy of this entire NOA shall be provided to the user by the manufacturer or its distributors and shall be available for inspection at the job site at the request of the Building Official.

This NOA **renews and revises NOA # 01-0112.03** and, consists of this page 1 as well as approval document mentioned above.
The submitted documentation was reviewed by **Raul Rodriguez.**

PRODUCT CONTROL ACCEPTED

GENERAL WINDOW SECTIONS

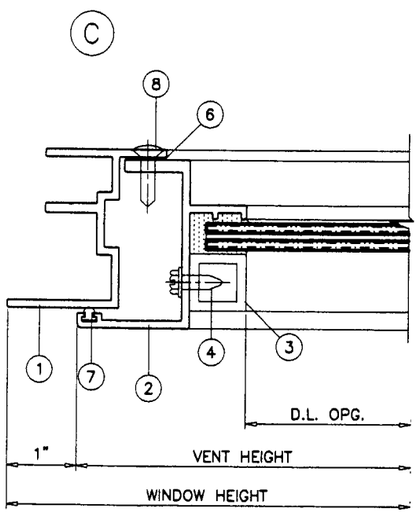

EXTERIOR

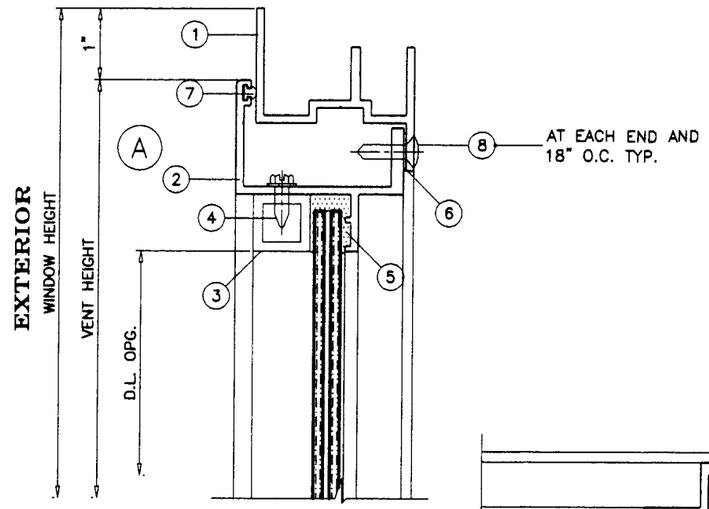

FOR GLASS TYPES
REFER TO
SHEETS 3, 4 & 5.

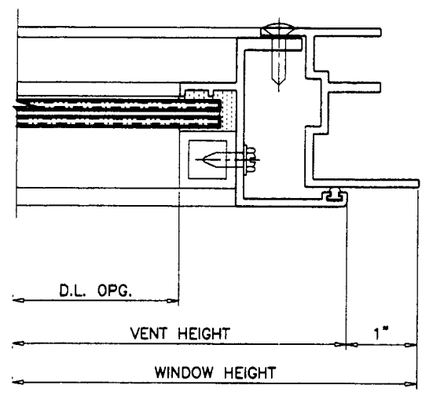

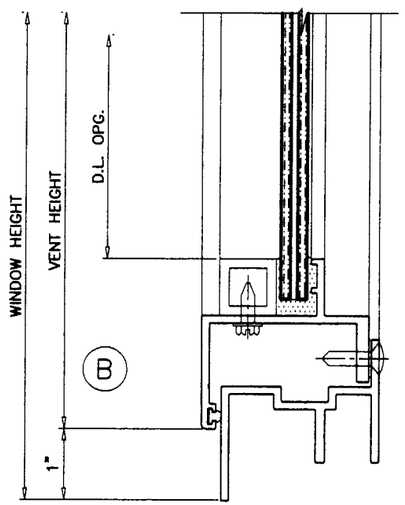

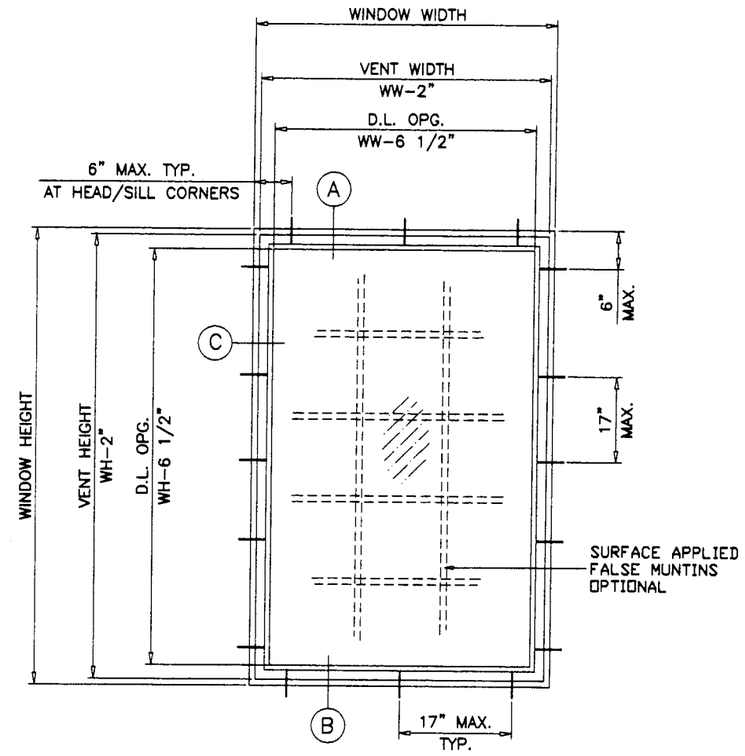

TYPICAL ELEVATION

FOR MULLION/MULTIPLE UNITS, REFER TO
SEPARATE CGI MULLION N.O.A.

NOTES:

1. THIS STRUCTURE IS DESIGNED AS PER THE SOUTH FLORIDA BUILDING CODE 1994 EDITION FOR DADE COUNTY. ALSO FOR WIND LOADS AS PER ASCE 7 USING CORRESPONDING LOADS.
2. WOOD BUCKS BY OTHERS, MUST BE ANCHORED PROPERLY TO TRANSFER LOADS TO THE STRUCTURE.
3. ANCHORS SHALL BE AS LISTED, SPACED AS SHOWN ON DETAILS. ANCHOR EMBEDMENT TO BASE MATERIAL SHALL BE BEYOND WALL DRESSING OR STUCCO.

INSTRUCTIONS FOR USING THESE CHARTS:

STEP 1 DETERMINE THE REQUIRED DESIGN PRESSURES FOR A GIVEN WINDOW.

STEP 2 OBTAIN CAPACITY OF WINDOW/GLASS TYPE FROM APPROPRIATE CHARTS.
A) SHEETS 3 & 4 FOR IMPACT RESISTANT.
B) SHEET 5 FOR NON-IMPACT RESISTANT.

STEP 3 SELECT INSTALLATION (ANCHOR) TYPE FROM DETAILS ON SHEET 6 AND CHART ON SHEET 7.

THE VALUES OBTAINED FOR WINDOW AND ANCHORS MUST MEET OR EXCEED THE REQUIRED PRESSURES.

APPROVED AS COMPLYING WITH THE
SOUTH FLORIDA BUILDING CODE
DATE February 21, 2002
BY
PRODUCT CONTROL DIVISION
BUILDING CODE COMPLIANCE OFFICE
ACCEPTANCE NO. 02-0122.05

Engr: DR. HUMAYOUN FAROOQ
STRUCTURES
FLA. PE # 16557

JAN 1 5 2002

AL-FAROOQ CORPORATION
ENGINEERS, PLANNERS & PRODUCT DESIGN
1235 SW 87 AVE
MIAMI, FLORIDA 33174
TEL. (305) 264-8100 FAX. (305) 262-6978
COMP-ANL\W01-83CG

SERIES-238 DESIGNER FIXED WINDOW

CONSTRUCTION GLASS IND. CORP.
7840 N.W. 62 nd STREET
MIAMI, FL. 33166
TEL. (305) 593-6590 FAX. (305) 593-6592

revisions:

no	date	by	description

date: 12-27-01
scale: 1/2" = 1"
dr. by: HAMID
chk. by:

drawing no.
W01-83

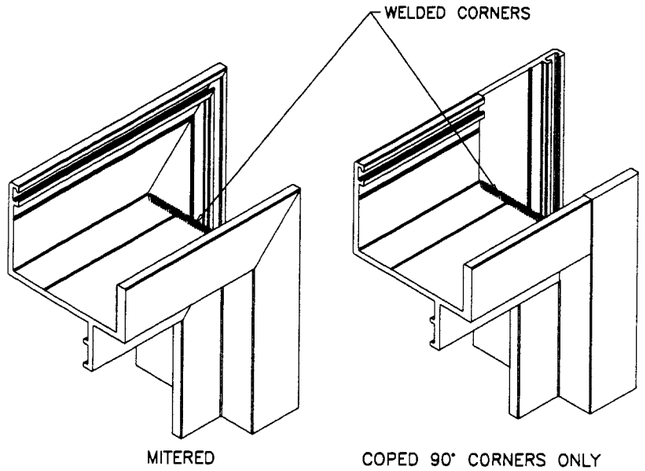

VENT CORNER

ALL FRAME AND VENT CORNERS TO BE SEALED WITH GE SILPRUF OR EQUIV.

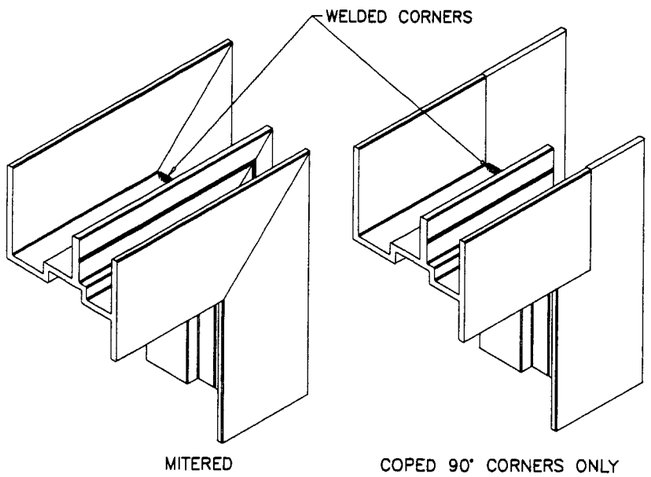

FRAME CORNER

ITEM	PART #	QUANTITY	DESCRIPTION	MATERIAL	MANF./SUPPLIER/REMARKS
1	CGI-386	4	FRAME	6063-T6	INDALEX OR EQUIV.
2	CGI-387	4	VENT	6063-T6	INDALEX OR EQUIV.
2A	CGI-387IG	4	VENT (INSUL GLASS)	6063-T6	INDALEX OR EQUIV.
3	CGI-	4	GLAZING BEAD	6063-T5	INDALEX OR EQUIV.
4	–	AS REQD.	GLAZING BEAD SCREWS @ 6" FROM ENDS & 20" O.C. MAX.	–	#12 X 5/8" SMS
5	–	–	GLAZING COMPOUND	SILICONE	GE-1000 (NON-IMPACT)
5A	–	–	GLAZING COMPOUND	SILICONE	GE-1200 (IMPACT)
6	–	4	1/2" X .090" SINGLE FACED GLAZING TAPE	FOAM	–
7	Q200 X190	AS REQD.	VENT WEATHERSTRIPPING	–	SCHLEGEL Q-LON
8	–	AS REQD.	VENT SCREWS @ 17" O.C. TYP.	–	#10 X 1" SS SMS
9	–	2/ CORNER	FRAME AND VENT ASSEMBLY SCREWS	–	#10 X 1-1/4" SS SMS

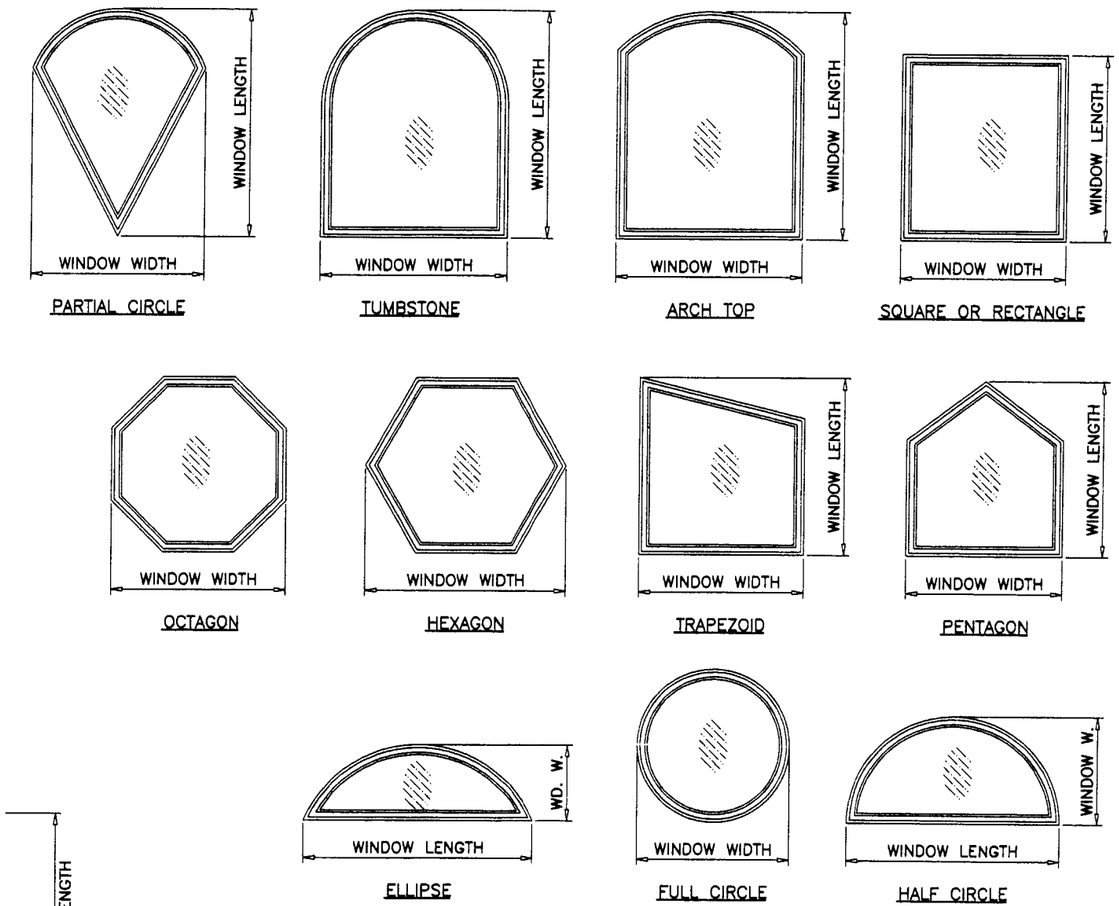

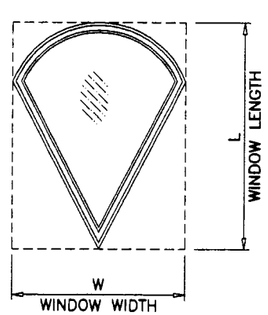

VERIFY LOAD CAPACITY OF WINDOW BY INSCRIBING SHAPE OF WINDOW WITHIN A RECTANGULAR OR SQUARE SHAPE AND USING THOSE DIMENSIONS TO CONSULT CHARTS ON SHEETS 3, 4 & 5 FOR GLASS (IMPACT AND NON-IMPACT) AND SHEET 7 FOR ANCHORS AS ON SAMPLE ABOVE.

APPROVED AS COMPLYING WITH THE SOUTH FLORIDA BUILDING CODE
DATE February 21, 2002
BY
PRODUCT CONTROL DIVISION
BUILDING CODE COMPLIANCE OFFICE
ACCEPTANCE NO. 02-0122.05

Engr: DR. HUMAYOUN FAROOQ
STRUCTURES
FLA. PE # 16557

JAN 1 5 2002

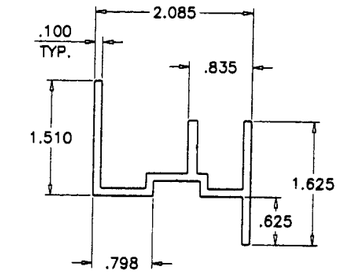

FRAME

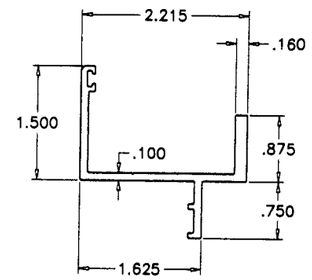

VENT

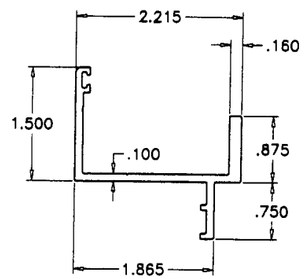

VENT (INSUL GLASS)

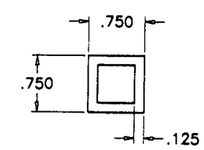

GLAZING STOP

AL-FAROOQ CORPORATION
ENGINEERS, PLANNERS & PRODUCT DESIGN
1235 SW 87 AVE
MIAMI, FLORIDA 33174
TEL (305) 264-8100 FAX. (305) 262-6978
COMP-ANL\W01-83CG

SERIES-238 DESIGNER FIXED WINDOW
CONSTRUCTION GLASS IND. CORP.
7840 N.W. 62 nd STREET
MIAMI, FL. 33166
TEL. (305) 593-6590 FAX. (305) 593-6592

revisions:			
no	date	by	description

date: 12-27-01
scale: 1/2" = 1"
dr. by: HAMID
chk. by:

drawing no.
W01-83

PERFORMANCE VALUES OF IMPACT RESISTANT WINDOWS

NO SHUTTERS REQUIRED

REFER TO SHEETS 6 AND 7 FOR INSTALLATION DETAILS

WINDOW DIMS.		GLASS TYPE '2'		GLASS TYPE '3'		GLASS TYPE '6'	
WIDTH	LENGTH	EXT. (+)	INT. (−)	EXT. (+)	INT. (−)	EXT. (+)	INT. (−)
24"	36"	110.0	145.5	110.0	157.5	110.0	195.8
30"		104.3	104.3	110.0	144.0	110.0	156.6
36"		82.5	82.5	110.0	120.0	110.0	130.5
42"		67.7	67.7	110.0	120.0	110.0	120.0
48"		58.5	58.5	110.0	120.0	110.0	120.0
54"		52.0	52.0	110.0	115.1	110.0	120.0
60"		46.6	46.6	102.7	102.7	110.0	120.0
24"	42"	110.0	127.2	110.0	157.5	110.0	193.6
30"		86.7	86.7	110.0	144.0	110.0	156.6
36"		67.7	67.7	110.0	120.0	110.0	120.0
42"		68.7	68.7	102.9	102.9	96.9	111.9
48"		60.6	60.6	102.9	102.9	96.9	111.9
54"		54.3	54.3	92.6	92.6	96.9	111.9
60"		48.1	48.1	81.7	81.7	90.0	90.0
24"	48"	110.0	111.2	110.0	157.5	110.0	184.4
30"		74.5	74.5	110.0	120.0	110.0	120.0
36"		58.5	58.5	110.0	120.0	110.0	120.0
42"		60.6	60.6	102.9	102.9	96.9	111.9
48"		54.2	54.2	90.0	90.0	84.8	97.9
54"		48.9	48.9	78.6	78.6	90.0	90.0
60"		44.1	44.1	69.6	69.6	90.0	90.0
24"	54"	103.8	103.8	110.0	154.3	110.0	177.8
30"		66.0	66.0	110.0	120.0	110.0	120.0
36"		52.0	52.0	110.0	115.1	110.0	120.0
42"		54.3	54.3	92.6	92.6	96.9	111.9
48"		48.9	48.9	78.6	78.6	90.0	90.0
54"		44.9	44.9	68.4	68.4	80.0	80.0
60"		40.7	40.7	60.4	60.4	80.0	80.0
24"	60"	100.8	100.8	110.0	120.0	110.0	120.0
30"		59.8	59.8	110.0	120.0	110.0	120.0
36"		46.6	46.6	102.7	102.7	110.0	120.0
42"		48.1	48.1	81.7	81.7	90.0	90.0
48"		44.1	44.1	69.6	69.6	90.0	90.0
54"		40.7	40.7	60.4	60.4	80.0	80.0
60"		–	–	–	–	70.0	70.0
24"	66"	93.0	93.0	110.0	120.0	110.0	120.0
30"		57.8	57.8	110.0	120.0	110.0	120.0
36"		41.4	41.4	90.0	90.0	90.0	90.0
42"		43.5	43.5	74.4	74.4	90.0	90.0
48"		40.3	40.3	62.4	62.4	90.0	90.0
54"		–	–	–	–	70.0	70.0
60"		–	–	–	–	70.0	70.0
24"	72"	91.9	91.9	110.0	120.0	110.0	120.0
30"		53.5	53.5	110.0	120.0	110.0	120.0
36"		38.4	38.4	89.2	89.2	90.0	90.0
42"		39.2	39.2	68.2	68.2	90.0	90.0
48"		35.5	35.5	56.8	56.8	90.0	90.0
60"		–	–	–	–	70.0	70.0
63"		–	–	–	–	68.6	68.6
66"		–	–	–	–	65.5	65.5
87"		–	–	–	–	50.0	50.0

PERFORMANCE VALUES OF IMPACT RESISTANT WINDOWS

NO SHUTTERS REQUIRED

REFER TO SHEETS 6 AND 7 FOR INSTALLATION DETAILS

WINDOW DIMS.		GLASS TYPE '2'		GLASS TYPE '3'		GLASS TYPE '6'	
WIDTH	LENGTH	EXT. (+)	INT. (−)	EXT. (+)	INT. (−)	EXT. (+)	INT. (−)
24"	78"	91.3	91.3	110.0	120.0	110.0	120.0
30"		51.7	51.7	90.0	90.0	90.0	90.0
36"		35.5	35.5	82.7	82.7	90.0	90.0
42"		34.8	34.8	64.6	64.6	90.0	90.0
60"		–	–	–	–	70.0	70.0
81"		–	–	–	–	50.0	50.0
24"	84"	85.6	85.6	110.0	120.0	110.0	120.0
30"		49.3	49.3	90.0	90.0	90.0	90.0
36"		33.4	33.4	81.0	81.0	90.0	90.0
57"		–	–	–	–	70.0	70.0
75"		–	–	–	–	50.0	50.0
24"	96"	78.1	78.1	110.0	120.0	110.0	120.0
30"		46.9	46.9	90.0	90.0	90.0	90.0
36"		31.7	31.7	76.8	76.8	90.0	90.0
51"		–	–	–	–	70.0	70.0
66"		–	–	–	–	50.0	50.0
24"	108"	59.0	59.0	90.0	90.0	90.0	90.0
30"		44.9	44.9	90.0	90.0	90.0	90.0
36"		–	–	–	–	70.0	70.0
45"		–	–	–	–	70.0	70.0
60"		–	–	–	–	50.0	50.0
24"	120"	45.6	45.6	90.0	90.0	90.0	90.0
39"		–	–	–	–	70.0	70.0
54"		–	–	–	–	50.0	50.0
36"	132"	–	–	–	–	70.0	70.0
48"		–	–	–	–	50.0	50.0
33"	144"	–	–	–	–	70.0	70.0
45"		–	–	–	–	50.0	50.0
30"	156"	–	–	–	–	70.0	70.0
39"		–	–	–	–	50.0	50.0

PERFORMANCE VALUES OF IMPACT RESISTANT WINDOWS

NO SHUTTERS REQUIRED

REFER TO SHEETS 6 AND 7 FOR INSTALLATION DETAILS

WINDOW DIMS.		GLASS TYPE '2'		GLASS TYPE '3'		GLASS TYPE '6'	
WIDTH	LENGTH	EXT. (+)	INT. (−)	EXT. (+)	INT. (−)	EXT. (+)	INT. (−)
19-1/8"	26"	110.0	157.5	110.0	157.5	110.0	210.0
26-1/2"		110.0	157.5	110.0	157.5	110.0	180.7
37"		110.0	123.0	110.0	157.5	110.0	180.7
53-1/8"		86.4	86.4	110.0	120.0	110.0	120.0
19-1/8"	38-3/8"	110.0	157.5	110.0	157.5	110.0	210.0
26-1/2"		110.0	114.2	110.0	157.5	110.0	177.3
37"		73.5	73.5	110.0	116.8	110.0	120.0
53-1/8"		49.8	49.8	106.0	106.0	106.1	120.0
19-1/8"	50-5/8"	110.0	157.5	110.0	157.5	110.0	210.0
26-1/2"		88.1	88.1	110.0	120.0	110.0	120.0
37"		54.2	54.2	110.0	116.8	110.0	120.0
53-1/8"		47.3	47.3	75.1	75.1	85.3	85.3
19-1/8"	63"	110.0	157.5	110.0	157.5	110.0	204.6
26-1/2"		74.8	74.8	110.0	120.0	110.0	120.0
37"		42.8	42.8	93.1	93.1	110.0	120.0
53-1/8"		39.4	39.4	58.3	58.3	81.3	81.3
19-1/8"	74-1/4"	110.0	120.0	110.0	120.0	110.0	120.0
26-1/2"		69.7	69.7	110.0	120.0	110.0	120.0
37"		35.9	35.9	82.9	82.9	90.0	90.0
53-1/8"		–	–	–	–	70.0	70.0

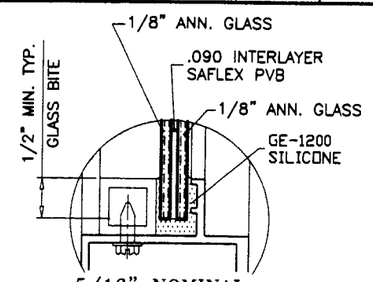

5/16" NOMINAL
GLASS TYPE '2'

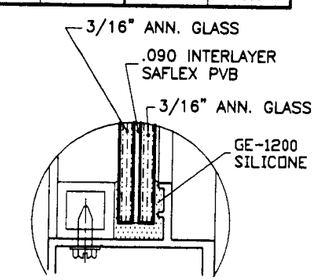

7/16" NOMINAL
GLASS TYPE '3'

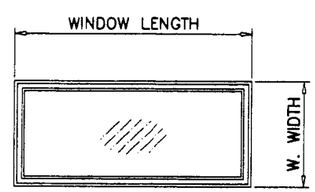

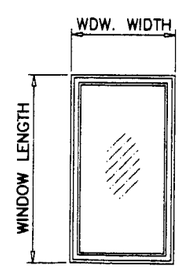

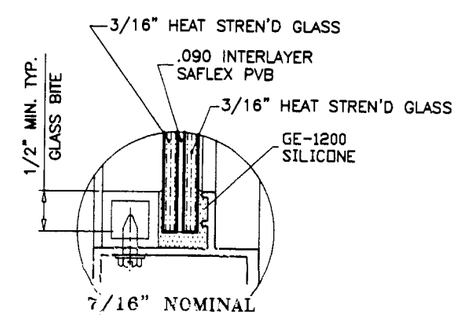

7/16" NOMINAL
GLASS TYPE '6'

NOTE:
WIDTH AND LENGTH DIMENSIONS CAN BE ORIENTED VERTICALLY OR HORIZONTALLY AS SHOWN.

APPROVED AS COMPLYING WITH THE SOUTH FLORIDA BUILDING CODE
DATE February 21, 2002
BY
PRODUCT CONTROL DIVISION
BUILDING CODE COMPLIANCE OFFICE
ACCEPTANCE NO. 02-0122.05

Engr.: DR. HUMAYOUN FAROOQ
STRUCTURES
FLA. PE # 16557

JAN 1 5 2002

AL-FAROOQ CORPORATION
ENGINEERS, PLANNERS & PRODUCT DESIGN
1235 SW 87 AVE
MIAMI, FLORIDA 33174
TEL. (305) 264-8100 FAX. (305) 262-6978
COMP-ANL\W01-83CG

SERIES-238 DESIGNER FIXED WINDOW

CONSTRUCTION GLASS IND. CORP.
7840 N.W. 62 nd STREET
MIAMI, FL. 33166
TEL. (305) 593-6590 FAX. (305) 593-6592

revisions:

no	date	by	description

date: 12-27-01
scale: 1/2" = 1"
dr. by: HAMID
chk. by:

drawing no.
W01-83

PERFORMANCE VALUES OF IMPACT RESISTANT WINDOWS

NO SHUTTERS REQUIRED
REFER TO SHEETS 6 AND 7 FOR INSTALLATION DETAILS

WINDOW DIMS.		GLASS TYPE '2A'		GLASS TYPE '3A'	
WIDTH	LENGTH	EXT. (+)	INT. (−)	EXT. (+)	INT. (−)
24"	36"	110.0	157.0	110.0	195.8
30"		110.0	112.6	110.0	156.6
36"		89.0	89.0	110.0	130.5
42"		73.1	73.1	110.0	120.0
48"		63.1	63.1	110.0	120.0
54"		56.1	56.1	110.0	120.0
60"		50.3	50.3	110.0	120.0
24"	42"	110.0	137.3	110.0	193.6
30"		93.6	93.6	110.0	156.6
36"		73.1	73.1	110.0	120.0
42"		74.8	74.8	96.9	111.9
48"		66.0	66.0	96.9	111.9
54"		59.1	59.1	96.9	111.9
60"		52.5	52.5	90.0	90.0
24"	48"	110.0	120.0	110.0	184.4
30"		80.5	80.5	110.0	120.0
36"		63.1	63.1	110.0	120.0
42"		66.0	66.0	96.9	111.9
48"		59.0	59.0	84.8	97.9
54"		53.2	53.2	90.0	90.0
60"		48.0	48.0	90.0	90.0
24"	54"	110.0	112.0	110.0	177.8
30"		71.2	71.2	110.0	120.0
36"		56.1	56.1	110.0	120.0
42"		59.1	59.1	96.9	111.9
48"		53.2	53.2	90.0	90.0
54"		48.9	48.9	80.0	80.0
60"		44.3	44.3	80.0	80.0
24"	60"	108.8	108.8	110.0	120.0
30"		64.5	64.5	110.0	120.0
36"		50.3	50.3	110.0	120.0
42"		52.5	52.5	90.0	90.0
48"		48.0	48.0	90.0	90.0
54"		44.3	44.3	80.0	80.0
24"	66"	100.4	100.4	110.0	120.0
30"		62.4	62.4	110.0	120.0
36"		44.7	44.7	90.0	90.0
42"		47.4	47.4	90.0	90.0
48"		43.9	43.9	90.0	90.0
24"	72"	99.2	99.2	110.0	120.0
30"		57.7	57.7	110.0	120.0
36"		41.4	41.4	90.0	90.0
42"		42.7	42.7	90.0	90.0
48"		38.6	38.6	90.0	90.0

PERFORMANCE VALUES OF IMPACT RESISTANT WINDOWS

NO SHUTTERS REQUIRED
REFER TO SHEETS 6 AND 7 FOR INSTALLATION DETAILS

WINDOW DIMS.		GLASS TYPE '2A'		GLASS TYPE '3A'	
WIDTH	LENGTH	EXT. (+)	INT. (−)	EXT. (+)	INT. (−)
24"	78"	98.6	98.6	110.0	120.0
30"		55.8	55.8	90.0	90.0
36"		38.3	38.3	90.0	90.0
42"		37.9	37.9	90.0	90.0
24"	84"	92.4	92.4	110.0	120.0
30"		53.2	53.2	90.0	90.0
36"		36.0	36.0	90.0	90.0
24"	96"	84.3	84.3	110.0	120.0
30"		50.6	50.6	90.0	90.0
36"		34.2	34.2	90.0	90.0
24"	108"	63.7	63.7	90.0	90.0
30"		48.5	48.5	90.0	90.0
24"	120"	49.2	49.2	90.0	90.0
19−1/8"	26"	110.0	170.0	110.0	210.0
26−1/2"		110.0	166.2	110.0	180.7
37"		110.0	132.7	110.0	180.7
53−1/8"		93.2	93.2	110.0	120.0
19−1/8"	38−3/8"	110.0	170.0	110.0	210.0
26−1/2"		110.0	123.3	110.0	177.3
37"		79.2	79.2	110.0	120.0
53−1/8"		53.7	53.7	106.1	120.0
19−1/8"	50−5/8"	110.0	170.0	110.0	210.0
26−1/2"		95.1	95.1	110.0	169.7
37"		58.5	58.5	110.0	120.0
53−1/8"		51.6	51.6	85.3	85.3
19−1/8"	63"	110.0	170.0	110.0	204.6
26−1/2"		80.8	80.8	110.0	120.0
37"		46.2	46.2	110.0	120.0
53−1/8"		42.9	42.9	81.3	81.3
19−1/8"	74−1/4"	110.0	120.0	110.0	120.0
26−1/2"		75.2	75.2	110.0	120.0
37"		38.8	38.8	90.0	90.0

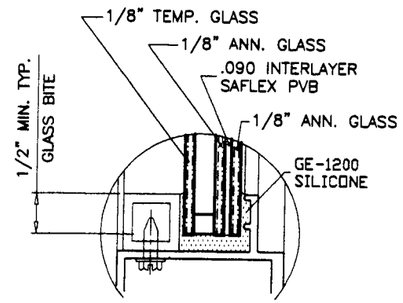

3/4" INSULATED
GLASS TYPE '2A'

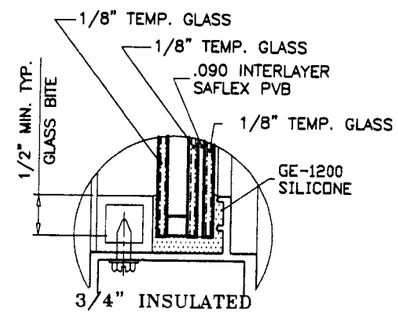

3/4" INSULATED
GLASS TYPE '3A'

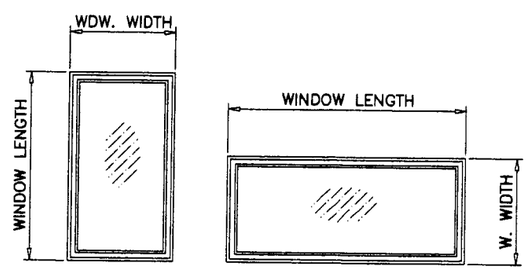

NOTE:
WIDTH AND LENGTH DIMENSIONS CAN BE ORIENTED VERTICALLY OR HORIZONTALLY AS SHOWN ABOVE.

SEE SHEETS 6 & 7 FOR ANCHORS

APPROVED AS COMPLYING WITH THE
SOUTH FLORIDA BUILDING CODE
DATE February 21, 2002
BY
PRODUCT CONTROL DIVISION
BUILDING CODE COMPLIANCE OFFICE
ACCEPTANCE NO. 02-0122.05

Engr: DR. HUMAYOUN FAROOQ
STRUCTURES
FLA. PE # 15557

JAN 1 5 2002

AL-FAROOQ CORPORATION
ENGINEERS, PLANNERS & PRODUCT DESIGN
1235 SW 87 AVE
MIAMI, FLORIDA 33174
TEL. (305) 264-8100 FAX. (305) 262-6978

COMP-ANL\W01-83CG

SERIES-238 DESIGNER FIXED WINDOW

CONSTRUCTION GLASS IND. CORP.
7840 N.W. 62 nd STREET
MIAMI, FL. 33166
TEL. (305) 593-6590 FAX. (305) 593-6592

revisions:

no	date	by	description

date: 12-27-01
scale: 1/2" = 1"
dr. by: HAMID
chk. by:

drawing no.
W01-83

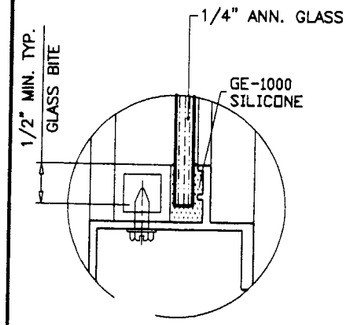

1/4" NOMINAL
GLASS TYPE '4'

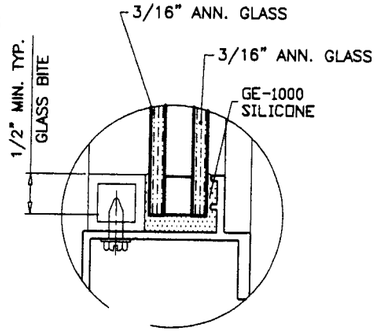

3/4" OVERALL INSUL. ANN.
ALT. GLASS TYPE '4A'

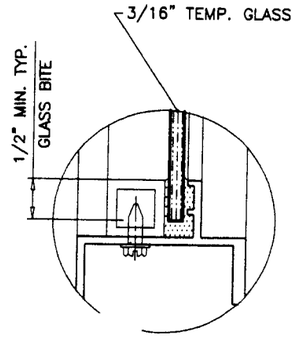

3/16" NOMINAL
GLASS TYPE '5'

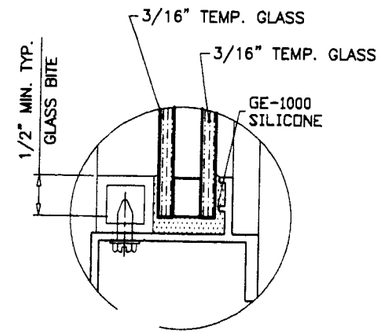

3/4" OVERALL INSUL. TEMP.
ALT. GLASS TYPE '5A'

PERFORMANCE VALUES OF NON-IMPACT RESISTANT WINDOWS

DADE COUNTY APPROVED IMPACT RESISTANT SHUTTERS REQUIRED
REFER TO SHEETS 6 AND 7 FOR INSTALLATION DETAILS

WINDOW DIMS.		GLASS TYPE '4'		GLASS TYPE '4A'		GLASS TYPE '5'&'5A'	
WIDTH	LENGTH	EXT. (+)	INT. (−)	EXT. (+)	INT. (−)	EXT. (+)	INT. (−)
24"	36"	92.5	92.5	92.5	92.5	110.0	195.8
30"		74.0	74.0	74.0	74.0	110.0	156.6
36"		61.7	61.7	61.7	61.7	110.0	130.5
42"		61.7	61.7	61.7	61.7	110.0	130.5
48"		61.7	61.7	61.7	61.7	110.0	130.5
54"		61.7	61.7	61.7	61.7	110.0	130.5
60"		57.7	57.7	61.7	61.7	110.0	130.5
24"	42"	91.5	91.5	91.5	91.5	110.0	193.6
30"		74.0	74.0	74.0	74.0	110.0	156.6
36"		61.7	61.7	61.7	61.7	110.0	130.5
42"		52.9	52.9	52.9	52.9	96.9	111.9
48"		52.9	52.9	52.9	52.9	96.9	111.9
54"		52.9	52.9	52.9	52.9	96.9	111.9
24"	48"	87.1	87.1	87.1	87.1	110.0	184.4
30"		74.0	74.0	74.0	74.0	110.0	156.6
36"		61.7	61.7	61.7	61.7	110.0	130.5
42"		52.9	52.9	52.9	52.9	96.9	111.9
48"		46.3	46.3	46.3	46.3	84.8	97.9
24"	54"	84.0	84.0	84.0	84.0	110.0	177.8
30"		72.4	72.4	72.4	72.4	110.0	153.2
36"		61.7	61.7	61.7	61.7	110.0	130.5
42"		52.9	52.9	52.9	52.9	96.9	111.9

PERFORMANCE VALUES OF NON-IMPACT RESISTANT WINDOWS

DADE COUNTY APPROVED IMPACT RESISTANT SHUTTERS REQUIRED
REFER TO SHEETS 6 AND 7 FOR INSTALLATION DETAILS

WINDOW DIMS.		GLASS TYPE '4'		GLASS TYPE '4A'		GLASS TYPE '5'&'5A'	
WIDTH	LENGTH	EXT. (+)	INT. (−)	EXT. (+)	INT. (−)	EXT. (+)	INT. (−)
24"	60"	81.7	81.7	81.7	81.7	110.0	172.9
30"		69.7	69.7	69.7	69.7	110.0	147.5
36"		57.7	57.7	61.7	61.7	110.0	130.5
24"	66"	79.9	79.9	79.9	79.9	110.0	169.0
30"		67.6	67.6	67.6	67.6	110.0	143.2
24"	72"	78.4	78.4	78.4	78.4	110.0	166.0
30"		64.4	64.4	66.0	66.0	110.0	139.8
24"	78"	77.2	77.2	77.2	77.2	110.0	163.4
24"	84"	76.2	76.2	76.2	76.2	110.0	161.3
24"	96"	74.7	74.7	74.7	74.7	110.0	158.1
19-1/8"	26"	110.0	116.1	110.0	116.1	110.0	210.0
26-1/2"		85.4	85.4	85.4	85.4	110.0	180.7
37"		85.4	85.4	85.4	85.4	110.0	180.7
53-1/8"		79.9	79.9	79.9	79.9	110.0	169.0
19-1/8"	38-3/8"	109.2	109.2	109.2	109.2	110.0	210.0
26-1/2"		83.8	83.8	83.8	83.8	110.0	177.3
37"		60.0	60.0	60.0	60.0	110.0	127.0
53-1/8"		57.9	57.9	57.9	57.9	107.1	123.7
19-1/8"	50-5/8"	101.1	101.1	101.1	101.1	110.0	210.0
26-1/2"		80.2	80.2	80.2	80.2	110.0	169.7
37"		60.0	60.0	60.0	60.0	110.0	127.0
19-1/8"	63"	96.7	96.7	96.7	96.7	110.0	204.6
26-1/2"		74.9	74.9	74.9	74.9	110.0	158.6
37"		53.6	53.6	60.0	60.0	110.0	127.0
19-1/8"	74-1/4"	94.1	94.1	94.1	94.1	110.0	199.2
26-1/2"		72.0	72.0	72.0	72.0	110.0	152.5

APPROVED AS COMPLYING WITH THE
SOUTH FLORIDA BUILDING CODE
DATE February 21, 2002
BY
PRODUCT CONTROL DIVISION
BUILDING CODE COMPLIANCE OFFICE
ACCEPTANCE NO. 02-0122.05

Engr: DR. HUMAYOUN FAROOQ
STRUCTURES
FLA. PE # 16557

JAN 1 5 2002

AL-FAROOQ CORPORATION
ENGINEERS, PLANNERS & PRODUCT DESIGN
1235 SW 87 AVE
MIAMI, FLORIDA 33174
TEL. (305) 264-8100 FAX. (305) 262-6978

COMP-ANL\W01-83CG

SERIES-238 DESIGNER FIXED WINDOW

CONSTRUCTION GLASS IND. CORP.
7840 N.W. 62 nd STREET
MIAMI, FL. 33166
TEL. (305) 593-6590 FAX. (305) 593-6592

revisions:

no	date	by	description

date: 12-27-01
scale: 1/2" = 1"
dr. by: HAMID
chk. by:

drawing no.
W01-83

INSTALLATION CONDITIONS (APPLIES TO ALL FOUR SIDES)

FOR ANCHOR PERFORMANCE VALUES SEE SHEET 6

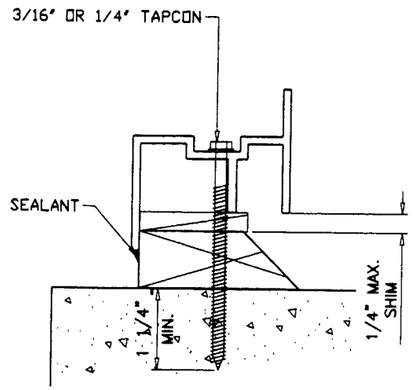

INSTALLATION TYPE '1'

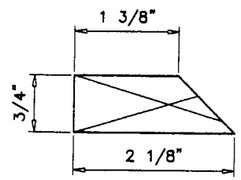

WOOD BUCK TYPE '1'

MATERIAL: PRESSURE TREATED

TYPICAL INSTALLATION DETAIL
ON ALL FOUR SIDES/USING WOOD

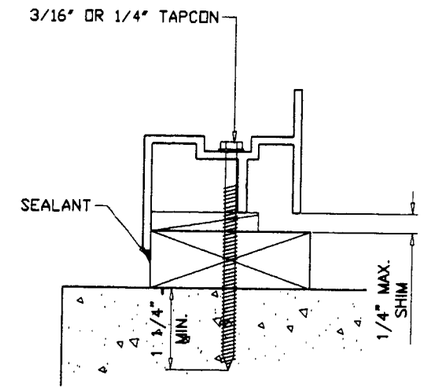

INSTALLATION TYPE '2'

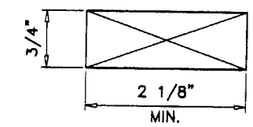

WOOD BUCK TYPE '2'

MATERIAL: PRESSURE TREATED

TYPICAL INSTALLATION DETAIL
ON ALL FOUR SIDES/USING WOOD

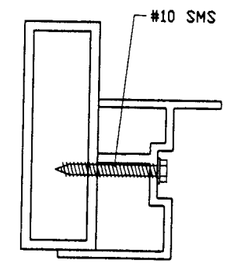

ATTACHMENT TO
APPROVED MULLIONS

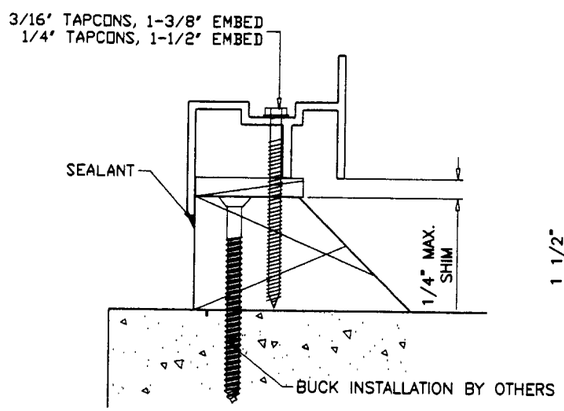

INSTALLATION TYPE '3'

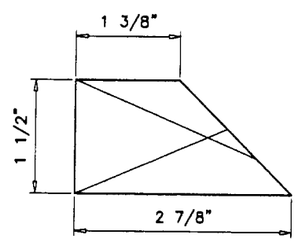

WOOD BUCK TYPE '3'

MATERIAL: PRESSURE TREATED

TYPICAL INSTALLATION DETAIL
ON ALL FOUR SIDES/USING WOOD

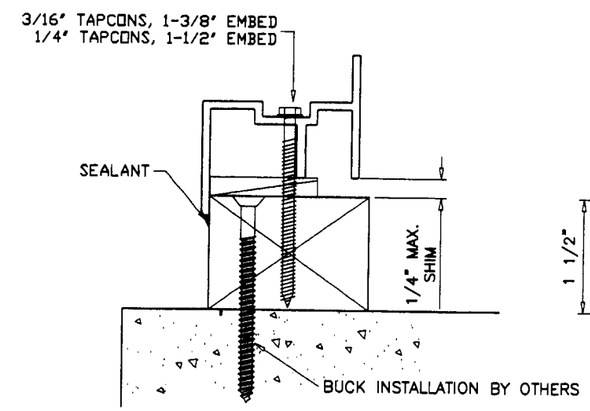

INSTALLATION TYPE '4'

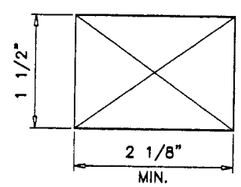

WOOD BUCK TYPE '4'

MATERIAL: PRESSURE TREATED

TYPICAL INSTALLATION DETAIL
ON ALL FOUR SIDES/USING WOOD

WOOD BUCKS NOT BY CGI CORP., MUST SUSTAIN LOADS IMPOSED BY GLAZING SYSTEM AND TRANSFER THEM TO THE BUILDING STRUCTURE.

APPROVED AS COMPLYING WITH THE
SOUTH FLORIDA BUILDING CODE
DATE February 21, 2002
BY
PRODUCT CONTROL DIVISION
BUILDING CODE COMPLIANCE OFFICE
ACCEPTANCE NO. 02-0122.05

Engr: DR. HUMAYOUN FAROOQ
STRUCTURES
FLA. RE # 16557

JAN 1 5 2002

AL-FAROOQ CORPORATION
ENGINEERS, PLANNERS & PRODUCT DESIGN
1235 SW 87 AVE
MIAMI, FLORIDA 33174
TEL. (305) 264-8100 FAX. (305) 262-6978
COMP-ANL\W01-83CG

SERIES-238 DESIGNER FIXED WINDOW

CONSTRUCTION GLASS IND. CORP.
7840 N.W. 62 nd STREET
MIAMI, FL. 33166
TEL. (305) 593-6590 FAX. (305) 593-6592

revisions:		
no	date	by description

date: 12-27-01
scale: 1/2" = 1"
dr. by: HAMID
chk. by:

drawing no. W01-83

PERFORMANCE VALUES FOR INSTALLATION OF ANCHORS TYPE 'A' 'B' OR 'C'
REFER TO SHEET 6 FOR DETAILS

WINDOW DIMS. WIDTH	WINDOW DIMS. LENGTH	ANCHOR TYPE 'A'	ANCHOR TYPE 'B'	ANCHOR TYPE 'C'
24"	36"	198.0	220.0	220.0
30"		158.4	189.6	220.0
36"		132.0	158.0	184.0
42"		105.6	126.4	147.2
48"		132.0	158.0	184.0
54"		113.1	135.4	157.7
60"		99.0	118.5	138.0
24"	42"	158.4	189.6	220.0
30"		126.7	151.7	176.6
36"		105.6	126.4	147.2
42"		90.5	108.3	126.2
48"		113.1	135.4	157.7
54"		97.0	116.1	135.2
60"		84.9	101.6	118.3
24"	48"	198.0	220.0	220.0
30"		158.4	189.6	220.0
36"		132.0	158.0	184.0
42"		113.1	135.4	157.7
48"		99.0	118.5	138.0
54"		84.9	101.6	118.3
60"		74.3	88.9	103.5
24"	54"	169.7	203.1	220.0
30"		135.8	162.5	189.3
36"		113.1	135.4	157.7
42"		97.0	116.1	135.2
48"		84.9	101.6	118.3
54"		75.4	90.3	105.1
60"		66.0	79.0	92.0
24"	60"	148.5	177.8	207.0
30"		118.8	142.2	165.6
36"		99.0	118.5	138.0
42"		84.9	101.6	118.3
48"		74.3	88.9	103.5
54"		66.0	79.0	92.0
60"		59.4	71.1	82.8
24"	66"	176.0	210.7	220.0
30"		140.8	168.5	196.3
36"		117.3	140.4	163.6
42"		100.6	120.4	140.2
48"		88.0	105.3	122.7
54"		78.2	93.6	109.0
60"		70.4	84.3	98.1
24"	72"	158.4	189.6	220.0
30"		126.7	151.7	176.6
36"		105.6	126.4	147.2
42"		90.5	108.3	126.2
48"		79.2	94.8	110.4
54"		70.4	84.3	98.1
60"		63.4	75.8	88.3

PERFORMANCE VALUES FOR INSTALLATION OF ANCHORS TYPE 'A' 'B' OR 'C'
REFER TO SHEET 6 FOR DETAILS

WINDOW DIMS. WIDTH	WINDOW DIMS. LENGTH	ANCHOR TYPE 'A'	ANCHOR TYPE 'B'	ANCHOR TYPE 'C'
24"	78"	144.0	172.4	200.7
30"		115.2	137.9	160.6
36"		96.0	114.9	133.8
42"		82.3	98.5	114.7
48"		72.0	86.2	100.4
54"		64.0	76.6	89.2
60"		57.6	68.9	80.3
66"		52.4	62.7	73.0
72"		48.0	57.5	66.9
78"		44.3	53.0	61.8
24"	84"	165.0	197.5	220.0
30"		132.0	158.0	184.0
36"		110.0	131.7	153.3
42"		94.3	112.9	131.4
48"		82.5	98.8	115.0
54"		73.3	87.8	102.2
60"		66.0	79.0	92.0
66"		60.0	71.8	83.6
72"		55.0	65.8	76.7
24"	96"	141.4	169.3	197.1
30"		113.1	135.4	157.7
36"		94.3	112.9	131.4
42"		80.8	96.7	112.7
48"		70.7	84.6	98.6
54"		62.9	75.2	87.6
60"		56.6	67.7	78.9
66"		51.4	61.6	71.7
72"		47.1	56.4	65.7
24"	108"	148.5	177.8	207.0
30"		118.8	142.2	165.6
36"		99.0	118.5	138.0
42"		84.9	101.6	118.3
48"		74.3	88.9	103.5
54"		66.0	79.0	92.0
60"		59.4	71.1	82.8
24"	120"	154.0	184.3	214.7
30"		123.2	147.5	171.7
36"		102.7	122.9	143.1
42"		88.0	105.3	122.7
48"		77.0	92.2	107.3
54"		68.4	81.9	95.4
24"	132"	158.4	189.6	220.0
30"		126.7	151.7	176.6
36"		105.6	126.4	147.2
42"		90.5	108.3	126.2
48"		79.2	94.8	110.4
24"	144"	144.0	172.4	200.7
30"		115.2	137.9	160.6
36"		96.0	114.9	133.8
42"		82.3	98.5	114.7
48"		72.0	86.2	100.4
24"	156"	148.5	177.8	207.0
30"		118.8	142.2	165.6
36"		99.0	118.5	138.0
42"		84.9	101.6	118.3

PERFORMANCE VALUES FOR INSTALLATION OF ANCHORS TYPE 'A' 'B' OR 'C'
REFER TO SHEET 6 FOR DETAILS

WINDOW DIMS. WIDTH	WINDOW DIMS. LENGTH	ANCHOR TYPE 'A'	ANCHOR TYPE 'B'	ANCHOR TYPE 'C'
19-1/8"	26"	220.0	220.0	220.0
26-1/2"		214.0	220.0	220.0
37"		175.5	210.0	220.0
53-1/8"		160.0	191.5	220.0
19-1/8"	38-3/8"	220.0	220.0	220.0
26-1/2"		163.2	195.3	220.0
37"		116.9	139.9	162.9
53-1/8"		108.4	129.8	151.1
19-1/8"	50-5/8"	220.0	220.0	220.0
26-1/2"		167.1	200.1	220.0
37"		119.7	143.3	166.9
53-1/8"		82.2	98.4	114.5
19-1/8"	63"	175.4	209.9	220.0
26-1/2"		126.6	151.5	176.4
37"		90.7	108.5	126.4
53-1/8"		63.1	75.6	88.0
19-1/8"	74-1/4"	191.6	220.0	220.0
26-1/2"		138.3	165.5	192.7
37"		99.0	118.5	138.0
53-1/8"		69.0	82.6	96.1

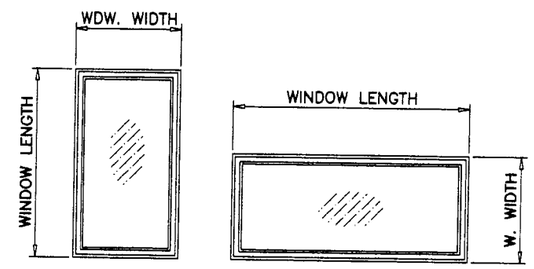

NOTE:
WIDTH AND LENGTH DIMENSIONS CAN BE ORIENTED VERTICALLY OR HORIZONTALLY AS SHOWN ABOVE.

APPROVED AS COMPLYING WITH THE SOUTH FLORIDA BUILDING CODE
DATE February 21, 2002
BY
PRODUCT CONTROL DIVISION
BUILDING CODE COMPLIANCE OFFICE
ACCEPTANCE NO. 02-0122.05

ANCHORS:

A = 3/16" TAPCONS

INTO 2BY BUCKS OR WOOD STRUCTURES
1-3/8" MIN. EMBEDMENT

THRU 1BY WOOD BUCKS INTO MASONRY OR DIRECTLY INTO MASONRY
1-1/4" MIN. MASONRY EMBED

B = 1/4" TAPCONS

INTO 2BY BUCKS OR WOOD STRUCTURES
1-1/2" MIN. WOOD EMBEDMENT

C = 1/4" TAPCONS

THRU WOOD BUCKS INTO MASONRY
1-1/4" MIN. MASONRY EMBED

#10 SMS

INTO APPROVED MULLIONS

TAPCONS AS MANUFACTURED BY ELCO.

Engr: DR. HUMAYOUN FAROOQ
STRUCTURES
FLA. PE # 16357

JAN 1 5 2002

AL-FAROOQ CORPORATION
ENGINEERS, PLANNERS & PRODUCT DESIGN
1235 SW 87 AVE
MIAMI, FLORIDA 33174
TEL. (305) 264-8100 FAX. (305) 262-6978
COMP-ANL\W01-83CG

SERIES-238 DESIGNER FIXED WINDOW

CONSTRUCTION GLASS IND. CORP.
7840 N.W. 62 nd STREET
MIAMI, FL. 33166
TEL. (305) 593-6590 FAX. (305) 593-6592

revisions:

no	date	by	description

date: 12-27-01
scale: 1/2" = 1"
dr. by: HAMID
chk. by:

drawing no.
W01-83