MIAMI-DADE

BUILDING CODE COMPLIANCE OFFICE (BCCO)
PRODUCT CONTROL DIVISION

MIAMI-DADE COUNTY, FLORIDA
METRO-DADE FLAGLER BUILDING
140 WEST FLAGLER STREET, SUITE 1603
MIAMI, FLORIDA 33130-1563
(305) 375-2901 FAX (305) 375-2908

NOTICE OF ACCEPTANCE (NOA)

Jeld-Wen, Inc.
31725 Highway 97 North
Chiloquin, OR 97624

SCOPE:
This NOA is being issued under the applicable rules and regulations governing the use of construction materials. The documentation submitted has been reviewed by Miami-Dade County Product Control Division and accepted by the Board of Rules and Appeals (BORA) to be used in Miami Dade County and other areas where allowed by the Authority Having Jurisdiction (AHJ).

This NOA shall not be valid after the expiration date stated below. The Miami-Dade County Product Control Division (In Miami Dade County) and/or the AHJ (in areas other than Miami Dade County) reserve the right to have this product or material tested for quality assurance purposes. If this product or material fails to perform in the accepted manner, the manufacturer will incur the expense of such testing and the AHJ may immediately revoke, modify, or suspend the use of such product or material within their jurisdiction. BORA reserves the right to revoke this acceptance, if it is determined by Miami-Dade County Product Control Division that this product or material fails to meet the requirements of the applicable building code.

This product is approved as described herein, and has been designed to comply with the High Velocity Hurricane Zone of the Florida Building Code.

DESCRIPTION: Series "DoorCraft Alterna" 6-8 Outswing Opaque Residential Insulated Wood Fiber Door w/sidelites

APPROVAL DOCUMENT: Drawing No. S-2017, titled "DoorCraft Alterna 6-8 Opaque Outswing w/Sidelites", sheets 1 through 7, prepared by R.W. Building Consultants, Inc., dated 9/12/00, bearing the Miami-Dade County Product Control Renewal stamp with the Notice of Acceptance number and expiration date by the Miami-Dade County Product Control Division.

MISSILE IMPACT RATING: None

LABELING: Each unit shall bear a permanent label with the manufacturer's name or logo, city, state and following statement: "Miami-Dade County Product Control Approved", unless otherwise noted herein.

RENEWAL of this NOA shall be considered after a renewal application has been filed and there has been no change in the applicable building code negatively affecting the performance of this product.

TERMINATION of this NOA will occur after the expiration date or if there has been a revision or change in the materials, use, and/or manufacture of the product or process. Misuse of this NOA as an endorsement of any product, for sales, advertising or any other purposes shall automatically terminate this NOA. Failure to comply with any section of this NOA shall be cause for termination and removal of NOA.

ADVERTISEMENT: The NOA number preceded by the words Miami-Dade County, Florida, and followed by the expiration date may be displayed in advertising literature. If any portion of the NOA is displayed, then it shall be done in its entirety.

INSPECTION: A copy of this entire NOA shall be provided to the user by the manufacturer or its distributors and shall be available for inspection at the job site at the request of the Building Official.
This NOA **renews NOA # 00-0211.04** and, consists of this page 1 as well as approval document mentioned above. The submitted documentation was reviewed by **Raul Rodriguez.**

PRODUCT CONTROL ACCEPTED

DoorCraft Alterna

WOOD COMPOSITE DOOR
OUTSWING 6-8 OPAQUE W/AND W/OUT SIDELITES

GENERAL NOTES

1. THIS PRODUCT IS DESIGNED TO MEET THE SOUTH FLORIDA BUILDING CODE 1994 EDITION FOR MIAMI-DADE COUNTY.
2. WOOD BUCKS BY OTHERS, MUST BE ANCHORED PROPERLY TO TRANSFER LOADS TO THE STRUCTURE.
3. PRODUCT ANCHORS SHALL BE AS LISTED AND SPACED AS SHOWN ON DETAILS. ANCHOR EMBEDMENT TO BASE MATERIAL SHALL BE BEYOND WALL DRESSING OR STUCCO.
4. IMPACT RESISTANT SHUTTERS ARE REQUIRED
5. DESIGNED PRESSURE RATING SEE TABLE PAGE 1.
6. SIDELITES ARE AN OPTION AND CAN BE IN A SINGLE OR DOUBLE CONFIGURATION.

RESIDENTIAL WOOD COMPOSITE DOOR
(Common to all frame conditions)

Door Leaf Construction:

Face sheets: .125" thick compressed wood fiber.

Core design: Expanded Polystyrene foam core, with 1.0 to 1.25 lbs. density.

Construction: Embossed type. The wood fiber sheets are glued to the expanded polystyrene, with wood bottom rails and mitered LVL wood top rails. The hinge and latch LVL wood rails are butt jointed to top and bottom rails at corners.

Sidelite Construction: Panels are sandwich glazed using a two piece polypropylene lite frame with mitered & welded corners.

TABLE OF CONTENTS

SHEET #	DESCRIPTION
1	COMMON (GENERAL NOTES, TYPICAL ELEVATION)
2	VERTICAL CROSS SECTIONS & B.O.M.
3	HORIZONTAL CROSS SECTIONS
4	HORIZONTAL CROSS SECTIONS
5	ANCHORING LOCATIONS & GLAZING DETAIL
6	ANCHORING LOCATIONS & DOOR MODELS
7	FRAME COMPONENTS

DESIGN PRESSURE RATING

	WHERE WATER INFILTRATION REQUIREMENT IS NEEDED
POSITIVE	+ 65.0 PSF
NEGATIVE	− 65.0 PSF

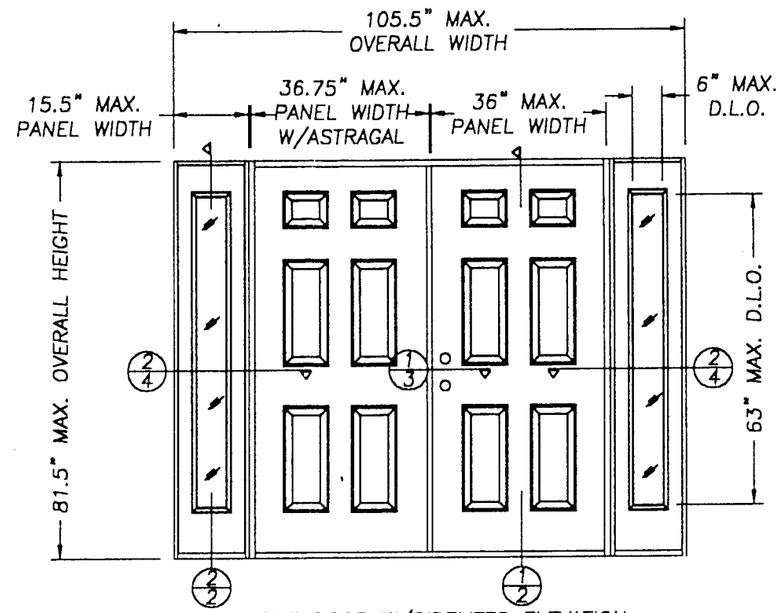

DOUBLE DOOR W/SIDELITES ELEVATION

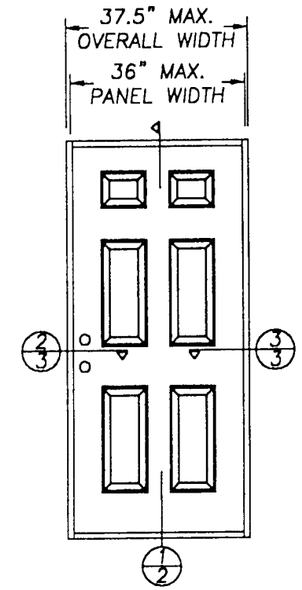

SINGLE DOOR ELEVATION

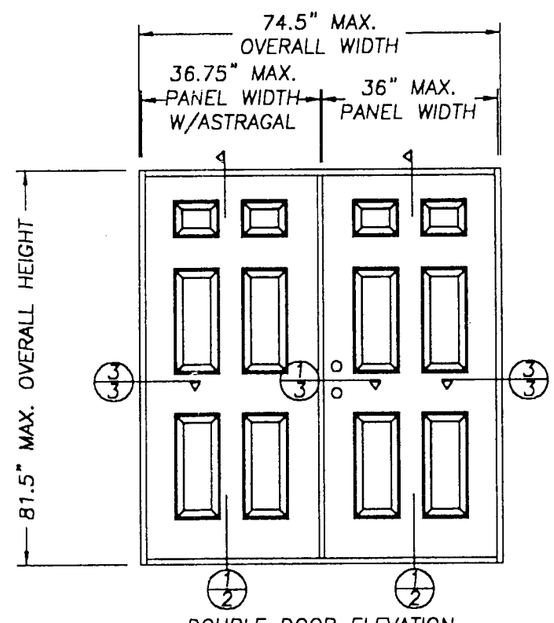

DOUBLE DOOR ELEVATION

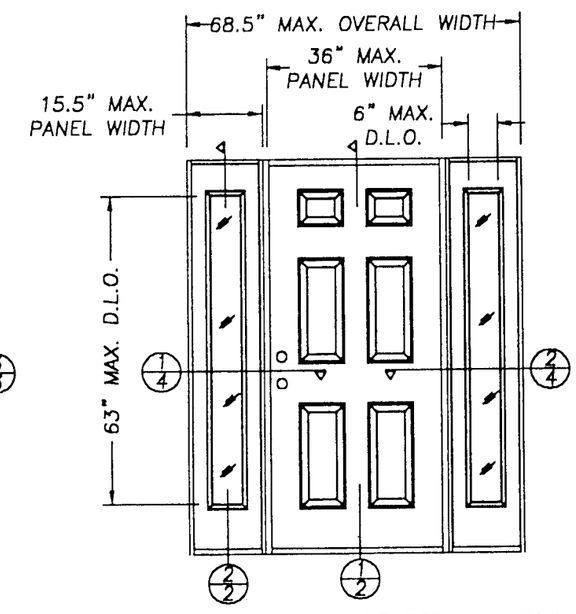

SINGLE DOOR W/SIDELITES ELEVATION

ALL DOOR MODELS ARE VIEWED FROM THE INTERIOR SIDE

PRODUCT RENEWED
ACCEPTANCE No. 02-0130.07
EXPIRATION DATE April 26, 2007
By
PRODUCT CONTROL DIVISION
BUILDING CODE COMPLIANCE OFFICE

APPROVED AS COMPLYING WITH THE SOUTH FLORIDA BUILDING CODE
DATE APR 26 2001
BY Manuel Perez
PRODUCT CONTROL DIVISION
BUILDING CODE COMPLIANCE OFFICE
ACCEPTANCE NO. 00-0211.04

JELD-WEN, INC.
31725 HIGHWAY 97 NORTH
CHILOQUIN, OR. 97624
PH. 541.783.2057

PRODUCT: DoorCraft Alterna 6-8 OPAQUE OUTSWING W/SIDELITES

PART OR ASSEMBLY: ELEVATIONS AND GERERAL NOTES

NO.	DATE	REVISIONS	BY
1	9/12/00	GENERAL REVISION	TJH

RW BUILDING CONSULTANTS, INC.
813.684.3831

DATE: 3/31/00
SCALE: N.T.S.
DWG. BY: TJH
CHK. BY: RW
DRAWING NO.: S-2017
SHEET 1 OF 7

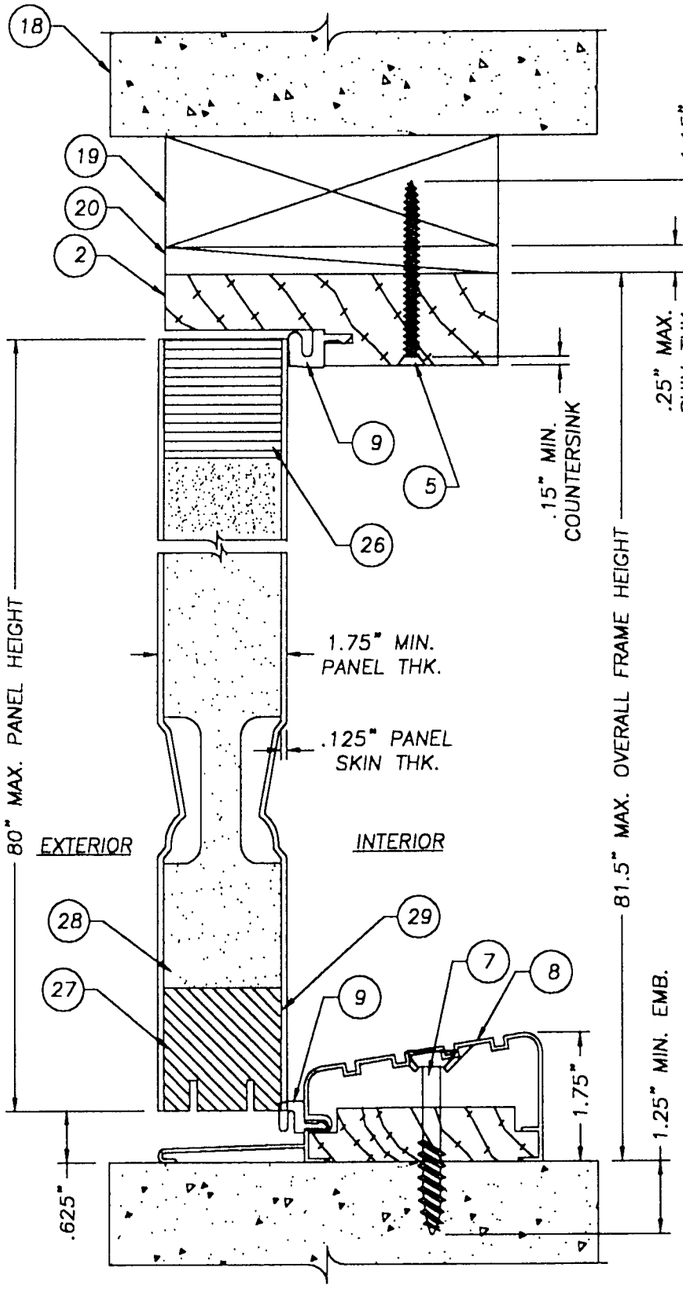

1/2 VERTICAL CROSS-SECTION DOOR PANEL

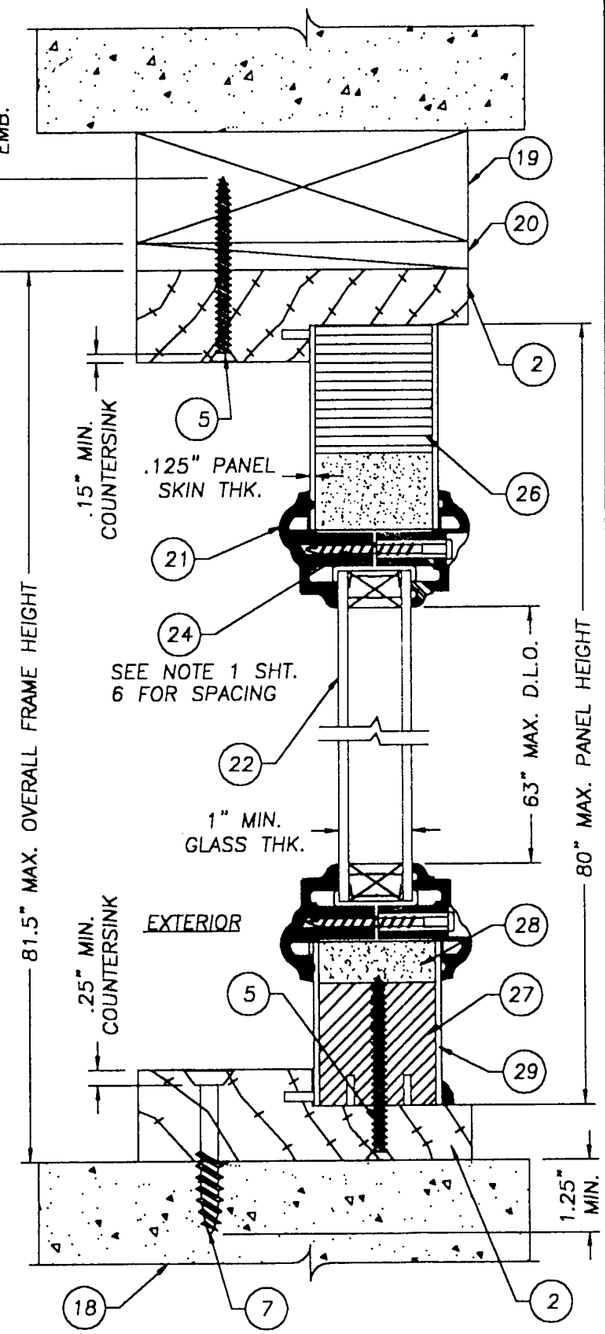

2/2 VERTICAL CROSS-SECTION SIDELITE PANEL

Item	DESCRIPTION	Material
1	HINGE JAMB (1 1/4" x 4 1/12" PONDEROSA PINE)	PINE
2	HEAD JAMB (1 1/4" x 4 1/2" PONDEROSA PINE)	PINE
3	4" x 4" BUTT HINGE 12GA. (.089" MIN)	STEEL
4	#9 x 1" PHILLIPS FLATHEAD WOOD SCREW	STEEL
5	#8 x 2 1/2" PHILLIPS FLATHEAD WOOD SCREW	STEEL
6	#10 X 1 1/2" PHILLIPS FLATHEAD WOOD SCREW	STEEL
7	1/4" TAPCON OR ITW BUILDEX TAPCON (NOA # 96-1226.03) OR ELCO TAPCON (NOA # 97-0731.15)	STEEL
8	BUMPER THRESHOLD (.051" WALL EXTRUDED ALUM. BY IMPERIAL)	ALUMINUM
9	COMPRESSION WEATHERSTRIP (Q-LON QDS-650)	
10	EXTRUDED ASTRAGAL (IMPERIAL #ANHRW)	ALUMINUM
11	ASTRAGAL THROW BOLT ø.031" x 19.25 L.	STEEL
12	#8 x 1/2" L. TYPE "AB" PANHEAD SMS	STEEL
13	ASTRAGAL REINFORCEMENT PLATE LOCATED TOP & BOTTOM OF ASTRAGAL, ATTACHED/W #14	WOOD
14	8-#6 X 1" PHILLIPS FLATHEAD WOOD SCREW	STEEL
15	KWIKSET TITAN 400 SERIES LOCK	
16	KWIKSET TITAN 400 SERIES DEADBOLT	
17	LATCH SCREWS (SEE LOCK INSTRUCTIONS)	
18	MASONRY WALL	CONC.
19	2x WOOD BUCK	WOOD
20	1/4" MAX. SHIMS	WOOD
21	LITE FRAME (ODL Spartech Polycom PP5530 C13)	
22	1" INSULATED TEMPERED GLASS (BY ODL)	GLASS
23	LATCH JAMB (1 1/4" x 4 1/2" PONDEROSA PINE)	PINE
24	#8 x 1 1/2" TEK SCREW (LITE FRAME)	STEEL
25	SIDE RAIL WOOD CAP (FINGER JOINTED)	PINE
26	TOP & INTERNAL RAIL (MITERED LVL PACIFIC WOOD)	LVL
27	BOTTOM RAIL (WOOD)	PINE
28	EXPANDED POLYSTYRENE (1.0 TO 1.25lbs DENSITY BY JELD-WEN)	FOAM
29	DOOR PANEL SKIN (.125" THK. COMPRESSED WOOD FIBER)	–
30	LOCK BLOCK (2.75" x 12" PONDEROSA PINE)	PINE
31	HINGE SIDE RAIL (BUTT JOINTED LVL PACIFIC WOOD)	LVL
32	LATCH SIDE RAIL (BUTT JOINTED LVL PACIFIC WOOD)	LVL
33	#8 x 2" PHILLIPS FLATHEAD WOOD SCREW	STEEL
34	BLANK JAMB (1 1/4" x 4 1/2" PONDEROSA PINE)	WOOD
35	BLANK SIDE RAIL (BUTT JOINTED LVL PACIFIC WOOD)	LVL
36	VENTURE GLAZING TAPE (VENTURE #VG 132W)	TAPE

JELD-WEN, INC.
31725 HIGHWAY 97 NORTH
CHILOQUIN, OR. 97624
PH. 541.783.2057

PRODUCT: DoorCraft Alterna 6-8 OPAQUE OUTSWING W/SIDELITES

PART OR ASSEMBLY: VERTICAL CROSS SECTIONS & B.O.M.

NO.	DATE	GENERAL REVISION	BY
1	9/12/00		TJH

REVISIONS

RW BUILDING CONSULTANTS, INC.
813.684.3831

PRODUCT RENEWED
ACCEPTANCE No. 02-0130.07
EXPIRATION DATE April 26, 2007
BY
PRODUCT CONTROL DIVISION
BUILDING CODE COMPLIANCE OFFICE

APPROVED AS COMPLYING WITH THE SOUTH FLORIDA BUILDING CODE
DATE APR 26 2001
BY
PRODUCT CONTROL DIVISION
BUILDING CODE COMPLIANCE OFFICE
ACCEPTANCE NO. 00-0211.04

DATE: 3/31/00
SCALE: 1/2" = 1"
DWG. BY: TJH
CHK. BY: RW
DRAWING NO.: S-2017
SHEET 2 OF 7

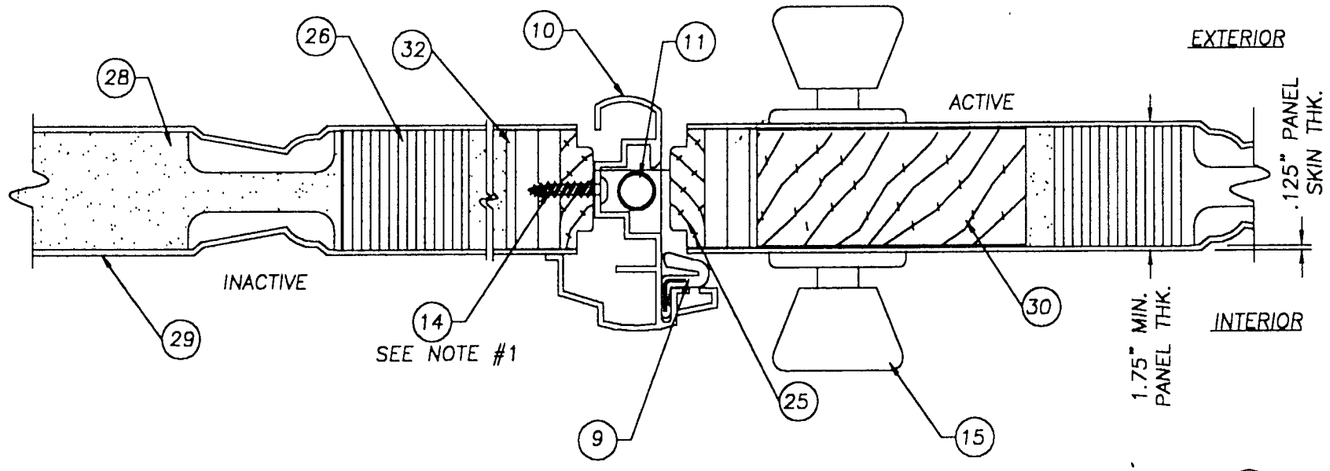

1/3 HORIZONTAL CROSS SECTION AT ASTRAGAL, TYP.

NOTES:

1. SPACING FOR #14 IS AS FOLLOWS: FROM TOP DOWN 1", 2 1/2", 4", 5 1/2", 13", 18" & 26". SPACING FROM THE BOTTOM UP IS THE SAME.
2. ATTACH THE STRIKE PLATE AND THE DEADBOLT PLATE TO THE ASTRAGAL USING (2) #8 x 2" LG. PHILLIPS FLATHEAD SCREWS EACH.

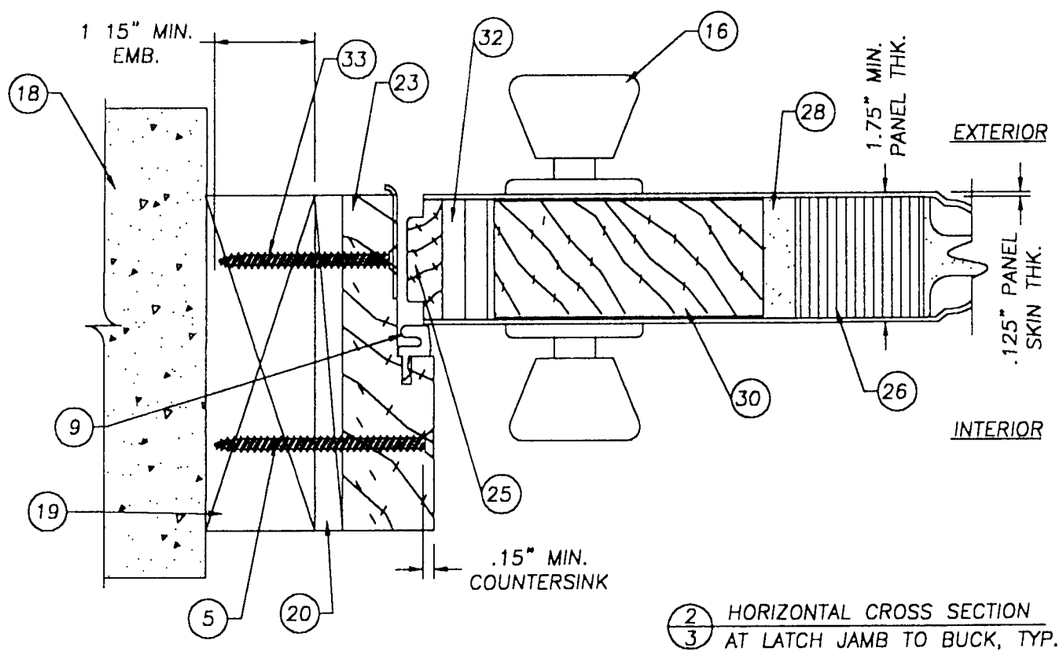

2/3 HORIZONTAL CROSS SECTION AT LATCH JAMB TO BUCK, TYP.

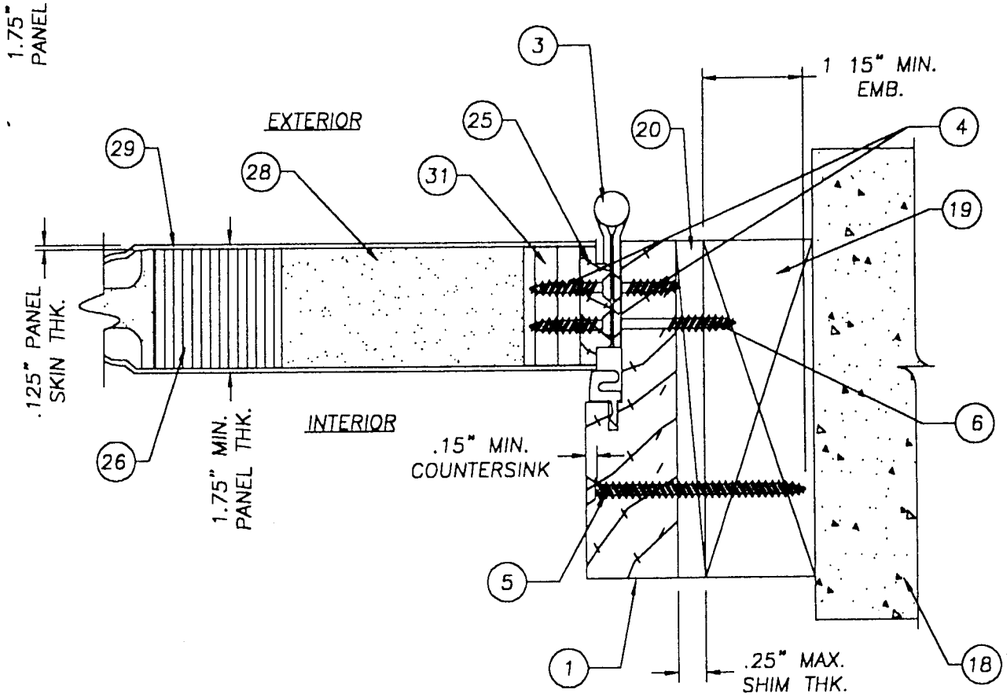

3/3 HORIZONTAL CROSS SECTION AT HINGE JAMB TO BUCK, TYP.

JELD-WEN, INC.
31725 HIGHWAY 97 NORTH
CHILOQUIN, OR. 97624
PH. 541.783.2057

NO.	DATE	REVISIONS	BY
1	9/12/00	GENERAL REVISION	TJH

PRODUCT: DoorCraft Alterna 6-8 OPAQUE OUTSWING W/SIDELITES

PART OR ASSEMBLY: HORIZONTAL CROSSECTIONS

RW BUILDING CONSULTANTS, INC. 813.684.3831

PRODUCT RENEWED
ACCEPTANCE No. 02-0130.07
EXPIRATION DATE April 26, 2007
BY
PRODUCT CONTROL DIVISION
BUILDING CODE COMPLIANCE OFFICE

APPROVED AS COMPLYING WITH THE SOUTH FLORIDA BUILDING CODE
DATE APR 26 2001
BY
PRODUCT CONTROL DIVISION
BUILDING CODE COMPLIANCE OFFICE
ACCEPTANCE NO. 00-0211.04

DATE: 3/31/00
SCALE: 1/2" = 1"
DWG. BY: TJH
CHK. BY: RW
DRAWING NO.: S-2017
SHEET 3 OF 7

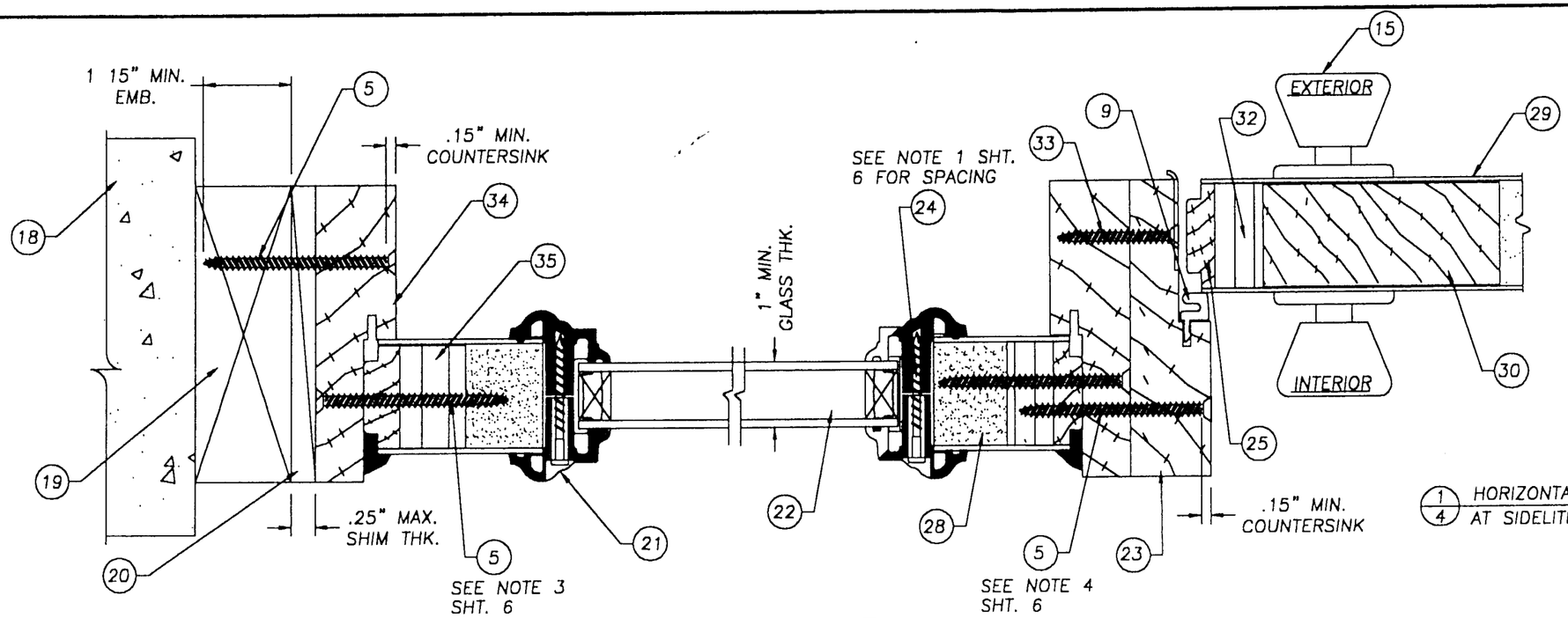

1/4 HORIZONTAL CROSS SECTION AT SIDELITE TO LATCH JAMB & BUCK, TYP.

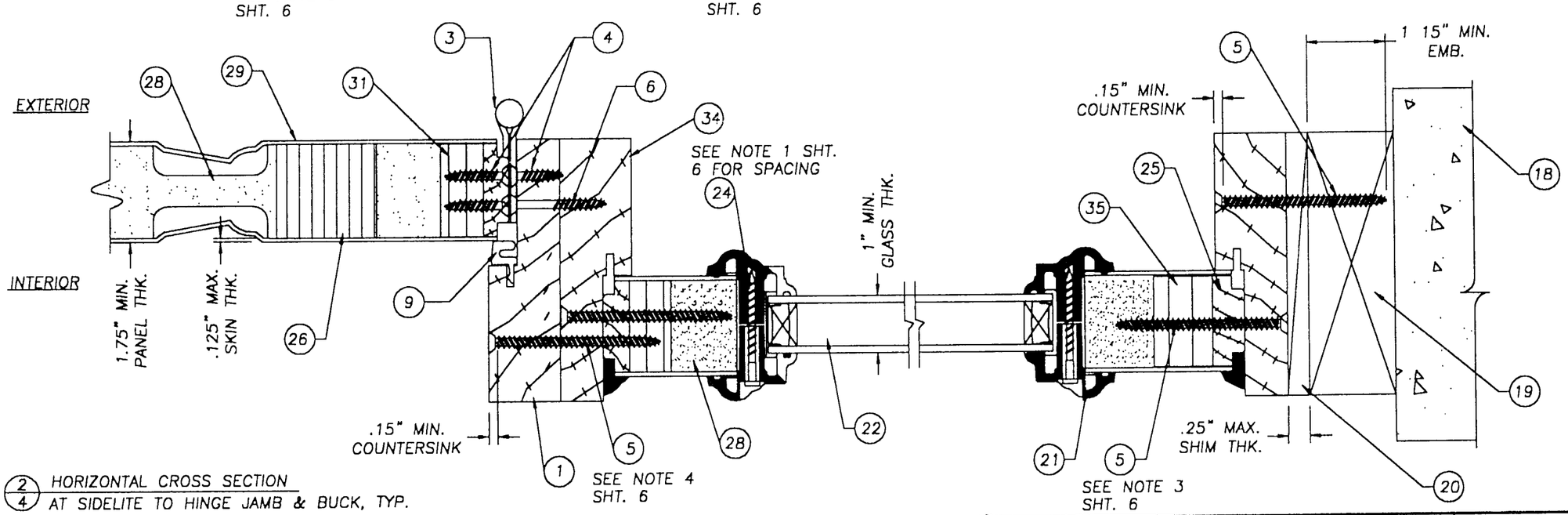

2/4 HORIZONTAL CROSS SECTION AT SIDELITE TO HINGE JAMB & BUCK, TYP.

JELD-WEN, INC.
31725 HIGHWAY 97 NORTH
CHILOQUIN, OR. 97624
PH. 541.783.2057

NO.	DATE	REVISIONS	BY
1	9/12/00	GENERAL REVISION	TJH

PRODUCT: DoorCraft Alterna 6-8 OPAQUE OUTSWING W/SIDELITES

PART OR ASSEMBLY: HORIZONTAL CROSSECTIONS

RW BUILDING CONSULTANTS, INC. 813.684.3831

PRODUCT RENEWED
ACCEPTANCE No. 02-0130.07
EXPIRATION DATE April 26, 2007
BY PRODUCT CONTROL DIVISION BUILDING CODE COMPLIANCE OFFICE

APPROVED AS COMPLYING WITH THE SOUTH FLORIDA BUILDING CODE
DATE APR 26 2001
BY PRODUCT CONTROL DIVISION BUILDING CODE COMPLIANCE OFFICE
ACCEPTANCE NO. 00-0211.04

DATE: 3/31/00
SCALE: 1/2" = 1"
DWG. BY: TJH
CHK. BY: RW
DRAWING NO.: S-2017
SHEET 4 OF 7

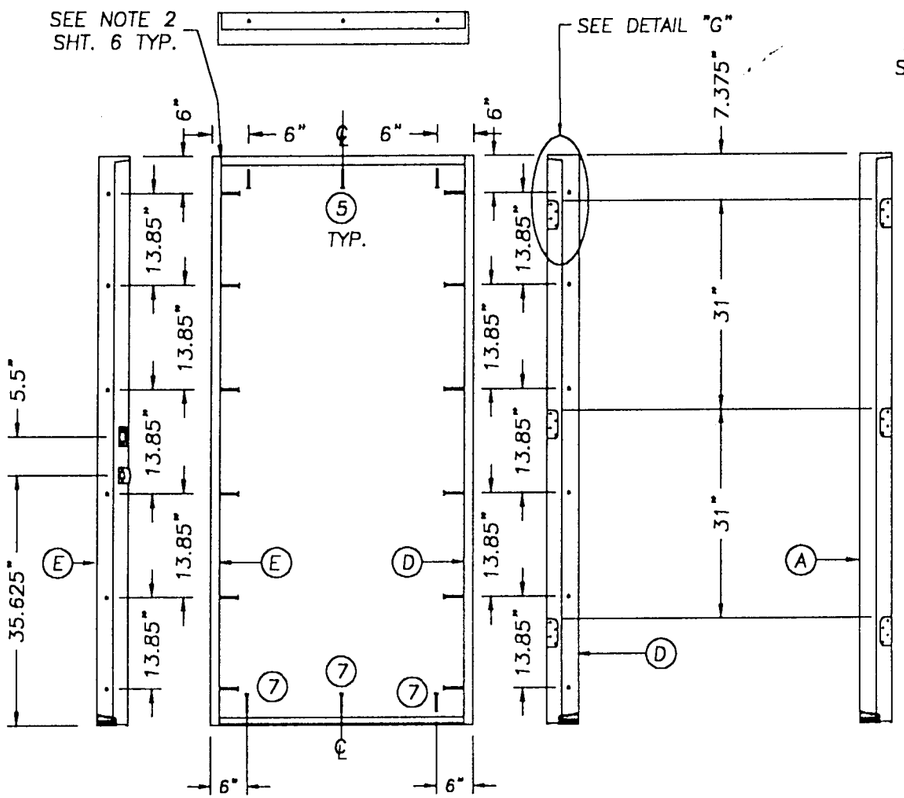

SINGLE DOOR ANCHORING LOCATIONS

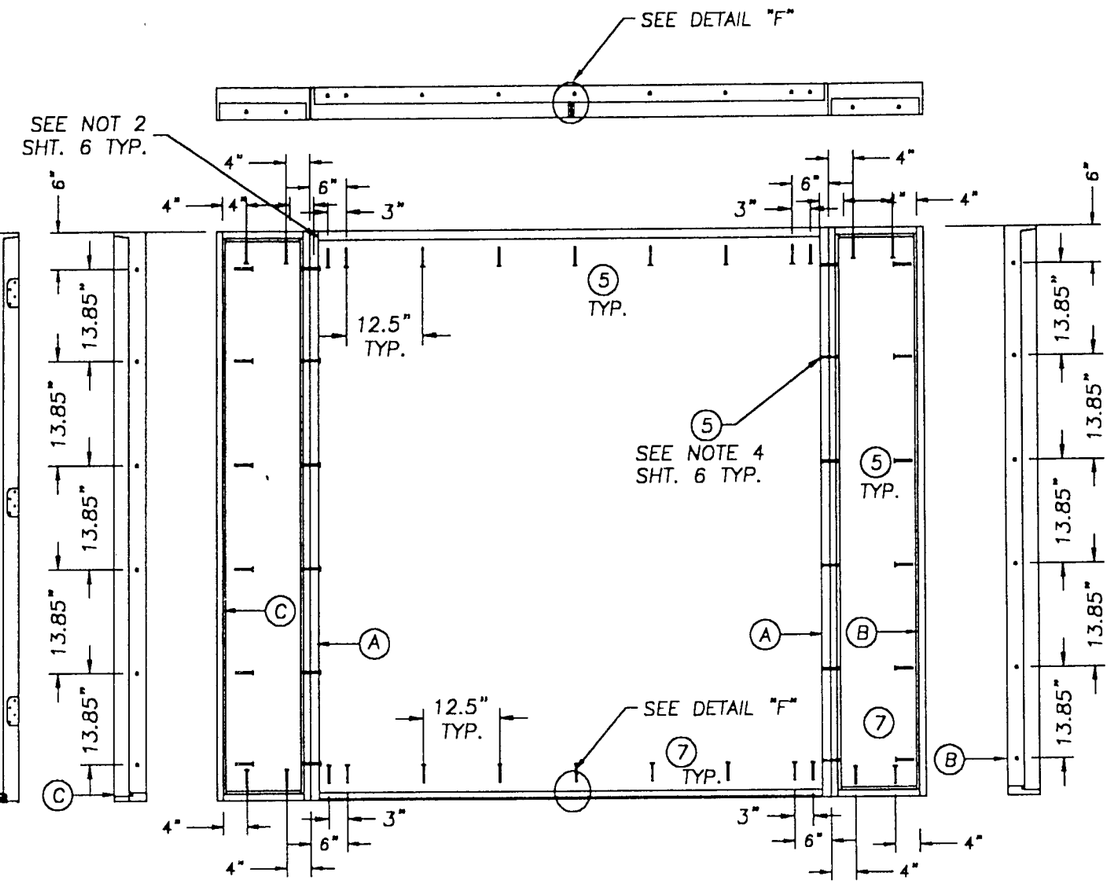

DOUBLE DOOR W/SIDELITES ANCHORING LOCATIONS

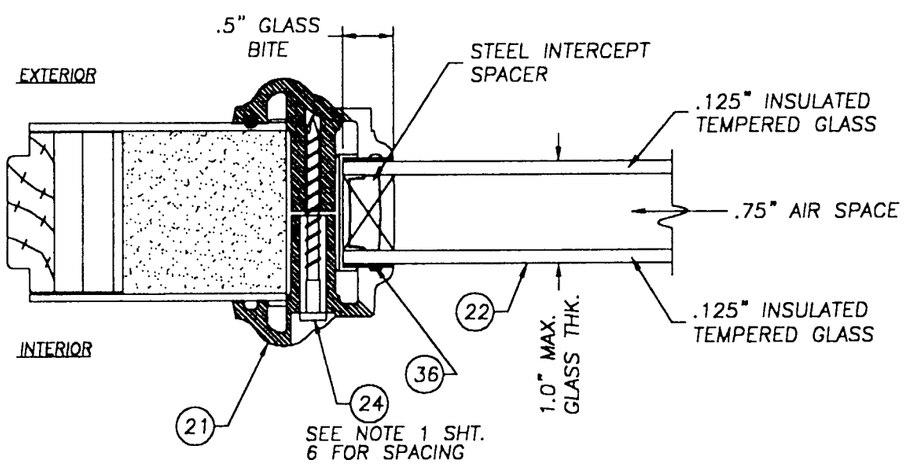

GLAZING DETAIL

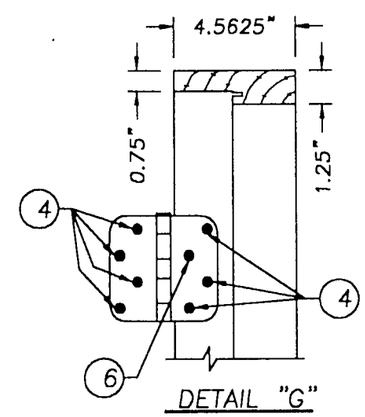

DETAIL "G"
HINGE DETAIL

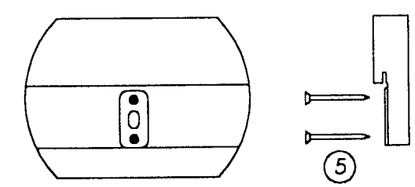

DETAIL "F"
ATTACH ASTRAGAL THROW BOLT
STRIKE PLATE TO FRAME
AS SHOWN.
TOP & BOTTOM

PRODUCT RENEWED
ACCEPTANCE No. 02-0130.01
EXPIRATION DATE April 26, 2007
By
PRODUCT CONTROL DIVISION
BUILDING CODE COMPLIANCE OFFICE

APPROVED AS COMPLYING WITH THE
SOUTH FLORIDA BUILDING CODE
DATE APR 26 2001
BY
PRODUCT CONTROL DIVISION
BUILDING CODE COMPLIANCE OFFICE
ACCEPTANCE NO 00-0211.04

JELD-WEN, INC.
31725 HIGHWAY 97 NORTH
CHILOQUIN, OR. 97624
PH. 541.783.2057

PRODUCT: DoorCraft Alterna 6-8 OPAQUE OUTSWING W/SIDELITES

PART OR ASSEMBLY: ANCHORING LOCATIONS AND GLAZING DETAIL

NO.	DATE	REVISIONS	BY
1	9/12/00	GENERAL REVISION	TJH

RW BUILDING CONSULTANTS, INC.
813.684.3831

DATE: 3/31/00
SCALE: N.T.S.
DWG. BY: TJH
CHK. BY: RW
DRAWING NO.: S-2017
SHEET 5 OF 7

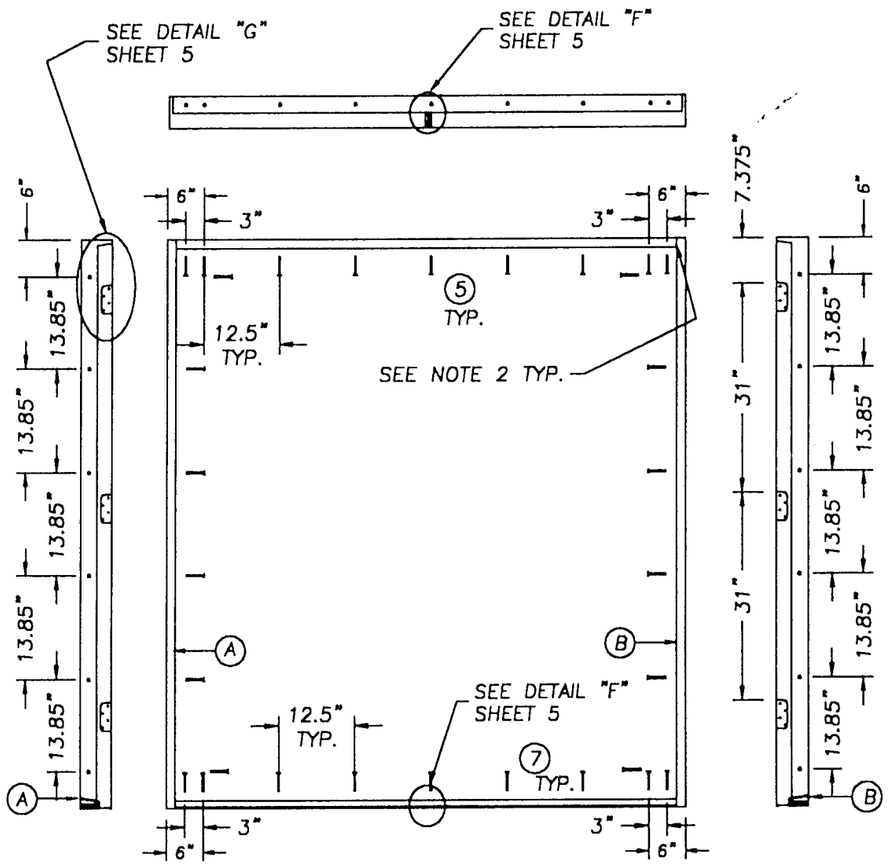

DOUBLE DOOR ANCHORING LOCATIONS

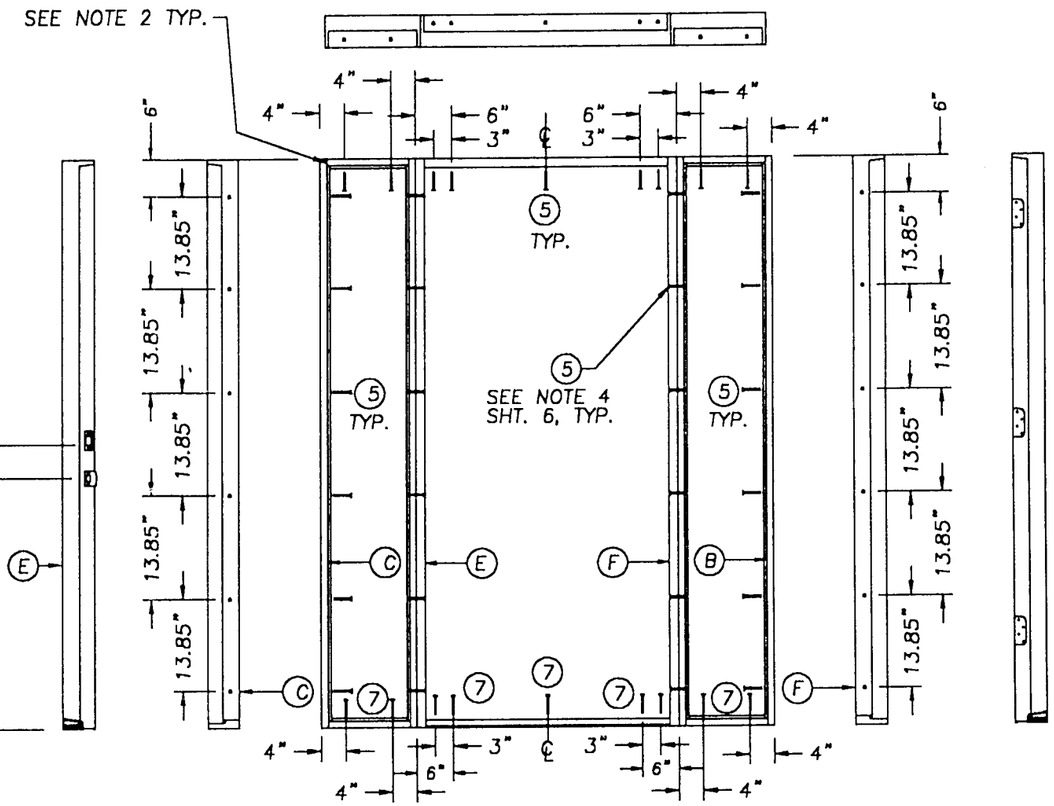

SINGLE DOOR W/SIDELITES ANCHORING LAYOUT

NOTES:

1. SPACING FOR ITEM #24 (#8 x 1 1/2" TEK SCREW) IS AS FOLLOWS: SIDELITE; TOP & BOTTOM (2) SCREWS 3" IN FROM EACH CORNER. SIDES (6) SCREWS 3.25", 13.75", 26.5", 39.375", 52.0" AND 62.625".
2. THE HEAD JAMBS ARE JOINED TO THE SIDE JAMBS USING (3) 7/8" x 2" WIRE STAPLES.
3. SPACING FOR ITEM #5 ATTACHING THE SIDELITE INTO THE FRAME IS AS FOLLOWS: 6" DOWN FROM TOP & 6" UP FROM BOTTOM WITH (2) MORE EVENLY SPACED, (4) SCREWS TOTAL EACH SIDE.
4. SPACING FOR ITEM #5 AT THE MULLION IS THE SAME AS THE SPACING FOR ITEM #5 ANCHORING THE UNIT INTO THE BUCK, (6) SCREWS EACH MULLION.

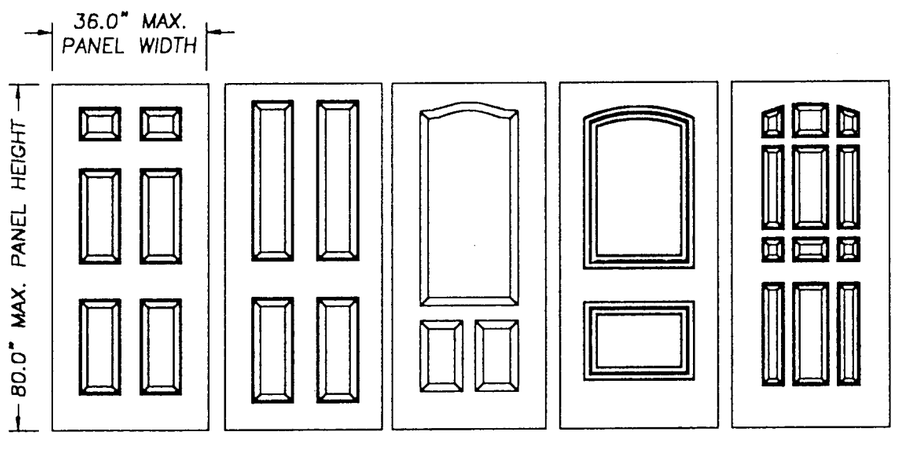

OPAQUE DOOR MODELS

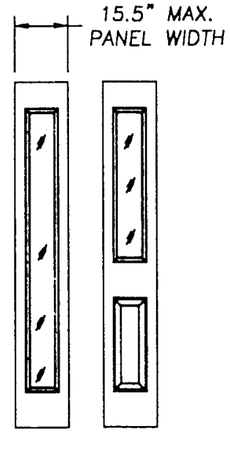

SIDELITE MODELS

PRODUCT RENEWED

ACCEPTANCE No. 02-0130.07

EXPIRATION DATE April 26, 2007

By

PRODUCT CONTROL DIVISION
BUILDING CODE COMPLIANCE OFFICE

APPROVED AS COMPLYING WITH THE SOUTH FLORIDA BUILDING CODE

DATE APR 26 2001

BY

PRODUCT CONTROL DIVISION
BUILDING CODE COMPLIANCE OFFICE

ACCEPTANCE NO. 00-0211.04

JELD-WEN, INC.
31725 HIGHWAY 97 NORTH
CHILOQUIN, OR. 97624
PH. 541.783.2057

PRODUCT: DoorCraft Alterna 6-8 OPAQUE OUTSWING W/SIDELITES

PART OR ASSEMBLY: ANCHORING LOCATIONS AND DOOR MODELS

NO.	DATE	REVISIONS	BY
1	9/12/00	GENERAL REVISION	TJH

RW BUILDING CONSULTANTS, INC.
813.684.3831

DATE: 3/31/00
SCALE: N.T.S.
DWG. BY: TJH
CHK. BY: RW
DRAWING NO.: S-2017
SHEET 6 OF 7

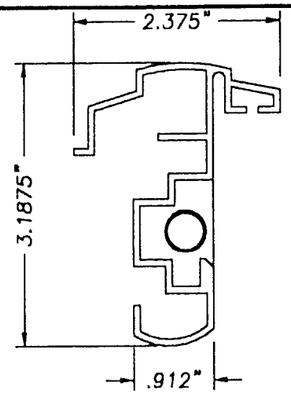

ASTRAGAL (.075" WALL ALUMINUM)
BY IMPERIAL #ANHRW

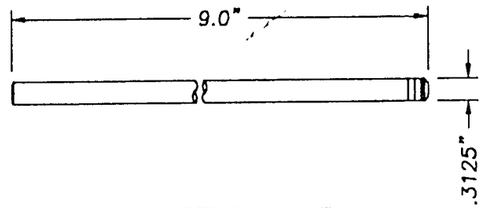

ASTRAGAL BOLT
MATERIAL: C/R ROD ZINC
& YELLOW CHROMATE

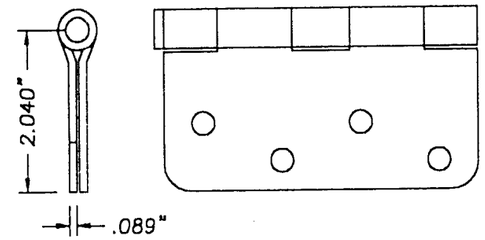

4 x 4 DOOR HINGE
HAGER, FULL MORTISED, STEEL
PLAIN BEARING, RESIDENTIAL WEIGHT

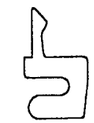

COMPRESSION WEATHERSTRIP
SCHLEGEL Q-LON QDS 650

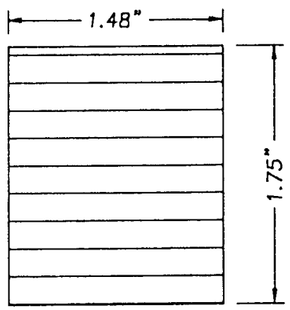

LVL TOP & INTERNAL RAIL

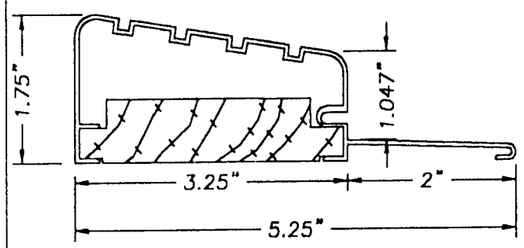

OUTSWING BUMP FACE
ALUMINUM THRESHOLD
.051" WALL THK.
BY IMPERIAL #BSN 13460

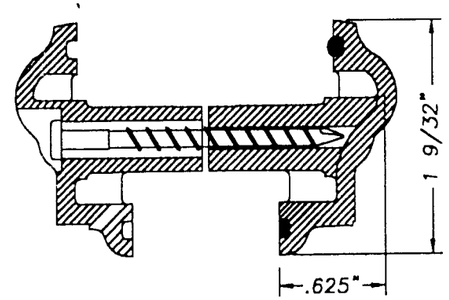

PLASTIC LIP LITE FRAME
(ODL Spartech Polycom PP5530 C13)

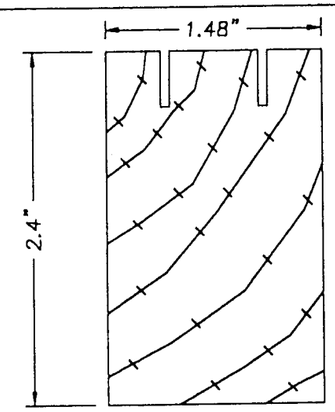

WOOD BOTTOM RAIL

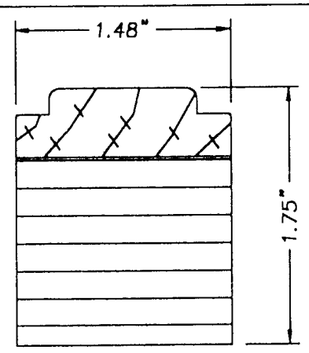

HINGE, LATCH & BLANK STYLE
LVL W/WOOD CAP

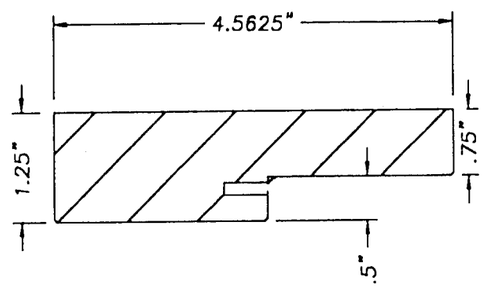

WOOD FRAME

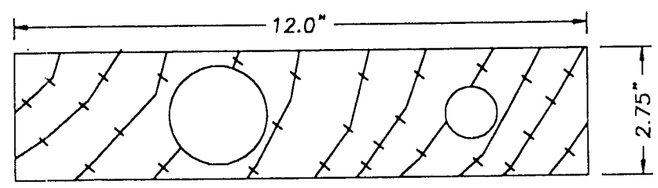

LOCK BLOCK, (WOOD)

JELD-WEN, INC.
31725 HIGHWAY 97 NORTH
CHILOQUIN, OR. 97624
PH. 541.783.2057

PRODUCT: DoorCraft Alterna 6'8 OPAQUE OUTSWING W/SIDELITES

PART OR ASSEMBLY: FRAME COMPONENTS

NO.	DATE	REVISIONS	BY
1	9/12/00	GENERAL REVISION	TJH

RW BUILDING CONSULTANTS, INC.
813.684.3831

PRODUCT RENEWED
ACCEPTANCE No. 02-0130.07
EXPIRATION DATE April 26, 2007
By
PRODUCT CONTROL DIVISION
BUILDING CODE COMPLIANCE OFFICE

APPROVED AS COMPLYING WITH THE
SOUTH FLORIDA BUILDING CODE
DATE APR 26 2001
BY
PRODUCT CONTROL DIVISION
BUILDING CODE COMPLIANCE OFFICE
ACCEPTANCE NO 00-0211.04

DATE: 3/31/00
SCALE: N.T.S.
DWG. BY: TJH
CHK. BY: RW
DRAWING NO.: S-2017
SHEET 7 OF 7