MIAMI-DADE

BUILDING CODE COMPLIANCE OFFICE (BCCO)
PRODUCT CONTROL DIVISION

MIAMI-DADE COUNTY, FLORIDA
METRO-DADE FLAGLER BUILDING
140 WEST FLAGLER STREET, SUITE 1603
MIAMI, FLORIDA 33130-1563
(305) 375-2901 FAX (305) 375-2908

NOTICE OF ACCEPTANCE (NOA)

Jordan's Aluminum, Inc.
116 North 61 Avenue.
Hollywood, FL 33024

SCOPE:
This NOA is being issued under the applicable rules and regulations governing the use of construction materials. The documentation submitted has been reviewed by Miami-Dade County Product Control Division and accepted by the Board of Rules and Appeals (BORA) to be used in Miami Dade County and other areas where allowed by the Authority Having Jurisdiction (AHJ).

This NOA shall not be valid after the expiration date stated below. The Miami-Dade County Product Control Division (In Miami Dade County) and/or the AHJ (in areas other than Miami Dade County) reserve the right to have this product or material tested for quality assurance purposes. If this product or material fails to perform in the accepted manner, the manufacturer will incur the expense of such testing and the AHJ may immediately revoke, modify, or suspend the use of such product or material within their jurisdiction. BORA reserves the right to revoke this acceptance, if it is determined by Miami-Dade County Product Control Division that this product or material fails to meet the requirements of the applicable building code.

This product is approved as described herein, and has been designed to comply with the High Velocity Hurricane Zone of the Florida Building Code.

DESCRIPTION: Extruded Aluminum Roll Up Shutter

APPROVAL DOCUMENT: Drawing No. 98-01, titled "1200 Series Roll Shutter", sheets 1 through 9, prepared, signed and sealed by EngCo Inc., dated 12/28/98 with last revision on 01/23/02, bearing the Miami-Dade County Product Control Revision stamp with the Notice of Acceptance number and expiration date by the Miami-Dade County Product Control Division.

MISSILE IMPACT RATING: Large and Small Missile Impact

LABELING: Each unit shall bear a permanent label with the manufacturer's name or logo, city, state and following statement: "Miami-Dade County Product Control Approved", unless otherwise noted herein.

RENEWAL of this NOA shall be considered after a renewal application has been filed and there has been no change in the applicable building code negatively affecting the performance of this product.

TERMINATION of this NOA will occur after the expiration date or if there has been a revision or change in the materials, use, and/or manufacture of the product or process. Misuse of this NOA as an endorsement of any product, for sales, advertising or any other purposes shall automatically terminate this NOA. Failure to comply with any section of this NOA shall be cause for termination and removal of NOA.

ADVERTISEMENT: The NOA number preceded by the words Miami-Dade County, Florida, and followed by the expiration date may be displayed in advertising literature. If any portion of the NOA is displayed, then it shall be done in its entirety.

INSPECTION: A copy of this entire NOA shall be provided to the user by the manufacturer or its distributors and shall be available for inspection at the job site at the request of the Building Official.
This NOA **revises NOA # 01-0802.05** and, consists of this page 1 as well as approval document mentioned above.
The submitted documentation was reviewed by **Candido F. Font, P.E.**

PRODUCT CONTROL ACCEPTED

Index

1- **Sheet 1 of 9**
- Index
- General Notes
- Basic Shapes

2- **Sheet 2 of 9**
- Typical Elevations
- Jamb Detail Section A/2
- Center Post Detail Section B/2
- Table 1/2 – Slat Design Load
- Minimum Glass Slat Separation
- Detail Sections – Vertical Bars E/2

3- **Sheet 3 of 9**
- Hood Detail Section C/3
- Header Selection Tables
- Header Anchorage Selection

4- **Sheet 4 of 9**
- Detail Sections – Sill Mount D/4
- Typical Hood Assembly

5- **Sheet 5 of 9**
- Mullion Selection Tables
- Typical Anchorage for Mullions

6- **Sheet 6 of 9**
- Vertical Bar Selection Tables

7- **Sheet 7 of 9**
- Typical Anchorage for Vertical Bars

8- **Sheet 8 of 9**
- Anchorage Tables for Tracks

9- **Sheet 9 of 9**
- Multiple Span Design Deflection

General Notes:

1– CODE: This product has been tested and designed in accordance with the South Florida Building Code, Dade County 94 edition, under Chapters 23 and 35.

2– DEFINITION: This product is an aluminum rolling type Shutter, designed, constructed and erected to easily enclose an area, providing protection from Hurricane force winds within the Designed Allowable Pressures and Limitations stated in this Approval.

3– POSTING: A permanent legible decal shall be placed at readily visible location (See Sheet 2) reading the following:
"1200 SERIES ROLL SHUTTER
JORDAN'S ALUMINUM INC.
HOLLYWOOD, FLORIDA
DADE COUNTY PRODUCT CONTROL APPROVED"

4– LOADS: Each installation must meet the Design Load calculated by a professional Engineer. The Designed Load MUST comply with Chapter 23 (SFBC–section 2309) and ASCE 7–88 (section 6). BASIC WIND SPEED = 110 MPH

5– MATERIAL: All aluminum structure and components shall be designed as per section 30 of the SFBC. Aluminum extrusions shall be 6063–T6 or as noted. Vertical bars, headers and Mullions have been designed by rational analysis using the Aluminum Construction Manual and SFBC as references.

6– FASTENERS: Assembly screws and anchors shall be as specified at current set of drawings. Installation and loads as per manufacturer specifications.

7– The total slat deflection after adding the deflection of header and storm bar shall not exceed a maximum of 2" or l/30 in the positive direction and a maximum of l/30 in the negative direction. See sheet 9 of 9.

Basic Shapes

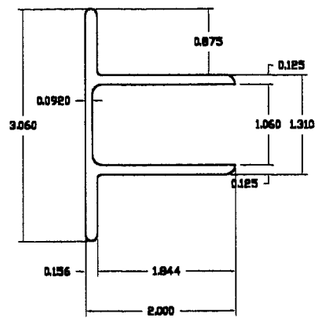

SSI 1250 - CLIP
6063-T6

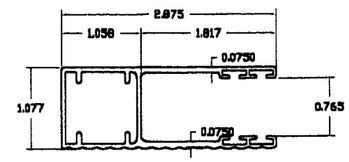

SSI 1210 - TRACK
6063-T6

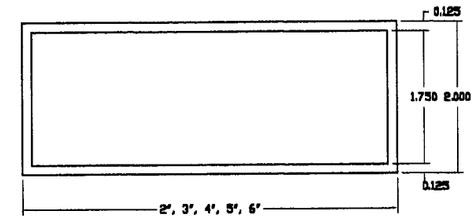

S.S.I. Std 2x Tubes
6063-T6

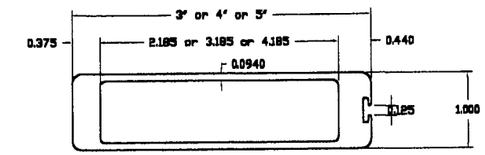

SSI 1261 VB 1X4
6061-T6

SSI 1260 - VB 1X3
6061-T6

SSI 1262 - VB 1X5
6005-T5

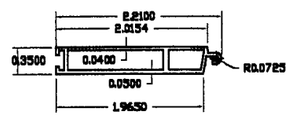

SSI 1202 BOTTOM SLAT
6063-T6

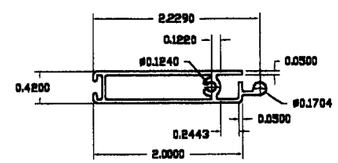

SSI 5002 BOTTOM SLAT (option 2)
6063-T6

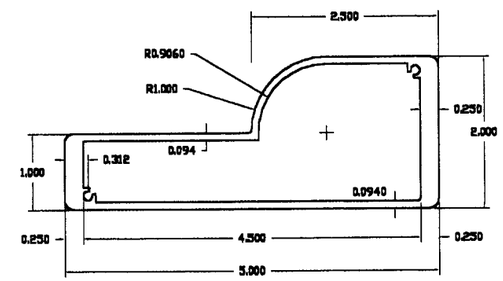

SSI 1240 - HEADER
6005-T5

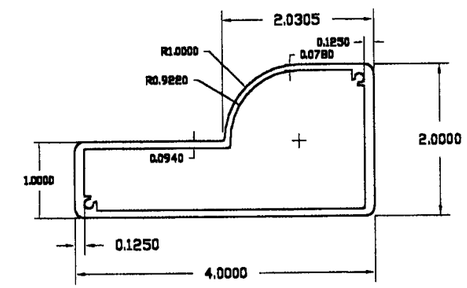

SSI 5040 - HEADER
6005-T5

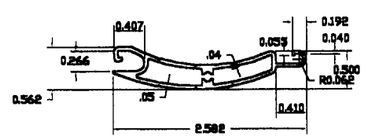

SSI 1200 - SLAT
6063-T6

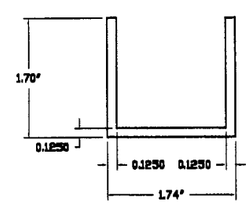

S.S.I. Sleeve
6063-T6

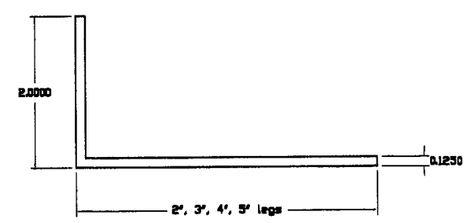

S.S.I. Std 2x Angles
6063-T6

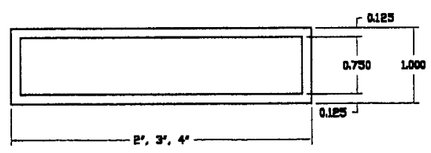

S.S.I. Std 1x Tubes
6063-T6

PRODUCT REVISED
as complying with the Florida Building Code
Acceptance No. 02-0201.01
Expiration Date 3/20/07
By:
Miami Dade Product Control Division

EngCo Inc. CA 8116 6971 W. SUNRISE BLVD SUITE 104 PLANTATION FL., 33313 Tel.: (954) 585-0304	JAN 25 2002 Pedro De Figueiredo PE 52809	1200 Series Roll Shutters JORDAN'S ALUMINUM 116 N. 61ST AVENUE HOLLYWOOD, FLORIDA, 33024 Tel.: (954) 986-1329 Fax: (954) 986-1349	Date: 12/28/98 Scale: 1/2"=1" Designed by: PPMF Rev. # / Description / Date 1 Review Notes 3/15/99 2 Transfer Manufacturer NOA 1/23/02	SHEET 1 of 9 Drawing Number 98-01

Typical Elevations

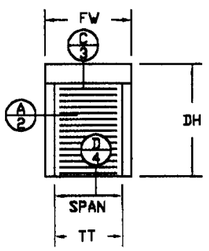

One Door Single Span

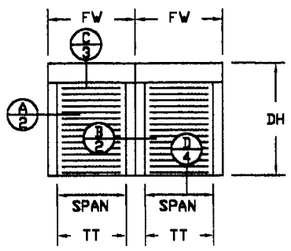

Two or more Doors Single Span

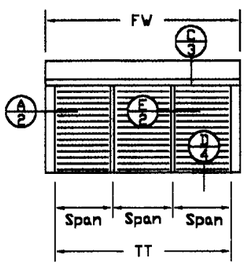

One Door Multiple Span

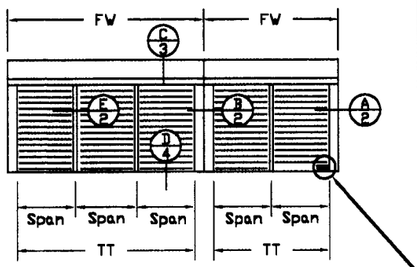

Two or more Doors Multiple Span

PRODUCT DECAL
"1200 SERIES ROLL SHUTTER
JORDAN'S ALUMINUM INC.
HOLLYWOOD, FLORIDA
DADE COUNTY PRODUCT CONTROL APPROVED"

FW - Door Finished Width
DH - Door Height
TT - Track to Track Width

Detail Sections Track Mounts

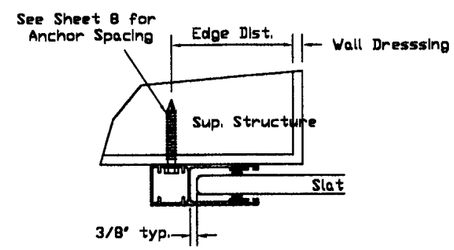

Detail A/2
Jamb Option 1
WALL MOUNT

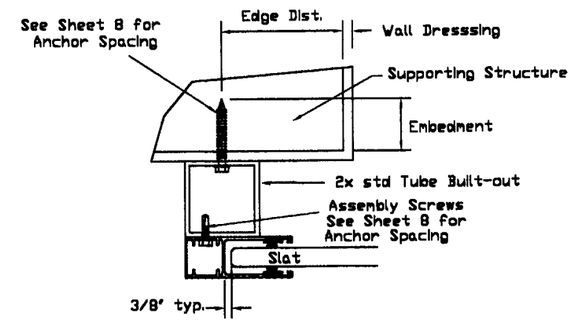

Detail A/2
Jamb Option 2
BUILD OUT

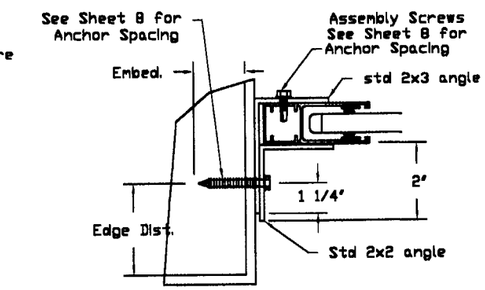

Detail A/2
Jamb Option 3
INSIDE MOUNT

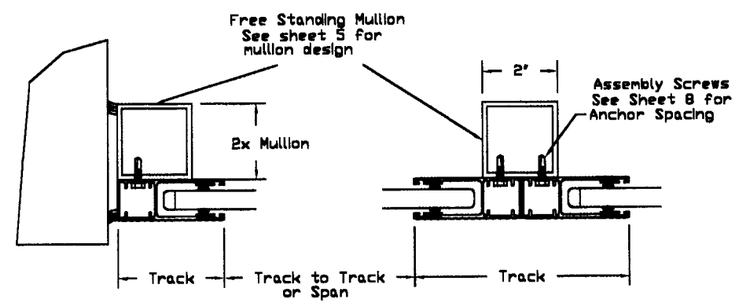

Detail A/2
Jamb Option 4

Detail B/2
Center Post

Detail Sections Vertical Bars

Detail E/2
Vertical Bars Option 1

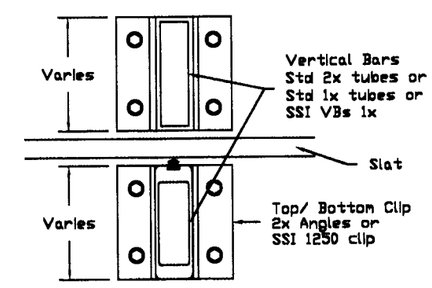

Detail E/2
Vertical Bars Option 2

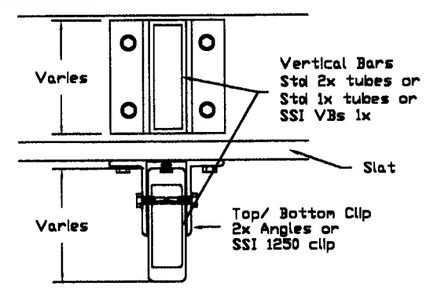

Table 1/2

1200 SLAT

Maximum Track To Track Width

Design Load (Psf)	Number of Spans: Single (+) Maximum Track to Track	Single (-) Maximum Track to Track	Two Maximum Track to Track	Three Maximum Track to Track
30	70	73	174	246
45	63	64	158	222
55	60		150	210
65	57		144	201
75	54		138	195
85	52		134	189
95	50		130	183
105	48		128	180
115	47		122	174
125	46		116	168
135	45		112	165
145	43		108	162
155	43		104	159
165	42		102	153
175	41		98	150
185	40		96	150
195	39		94	147
205	39		92	144

Note: It is Allowable to interpolate values in the table

MINUMUM SEPARATION FROM GLASS SURFACE	ELEVATION	
DETAILS	BELOW 30'	ABOVE 30'
A/2 OPTION 3	4 3/8"	SLAT DEF + 1"
A/2 OPTIONS 1 & 2	4"	SLAT DEF + 1"
A/2 OPTION 4 & B2	4"	MULL DEF+ SLAT DEF. + 1"

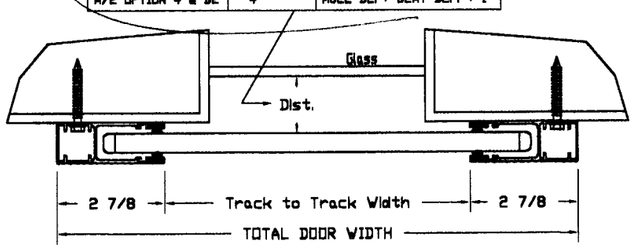

MULLION HEIGHT	168"	156"	144"	132"	120"	108"	96"	84"	72"
MULLION DEFLECTION	1"	7/8"	7/8"	3/4"	5/8"	5/8"	1/2"	1/2"	3/8"

SLAT SPAN	>60"	54"	48"	42"	36"	30"
SLAT DEFLECTION	2"	1 7/8"	1 5/8"	1 3/8"	1 1/4"	1"

NOTE: SLAT SPAN = TT WIDTH / # OF SPANS
SLAT DEFLECTION: LESSER OF SPAN/30 AND 2" (SFBC CRITERIA)

PRODUCT REVISED
as complying with the Florida
Building Code
Application No. 02-0201.01
Expiration Date: 5/20/07
By:
Miami-Dade Product Control
Division

EngCo Inc.
CA 8116
6971 W. SUNRISE BLVD
SUITE 104
PLANTATION FL., 33313
Tel.: (954) 585-0304

JAN 2 5 2002
Pedro De Figueiredo
PE 52809

JORDAN'S ALUMINUM
116 N. 61ST AVENUE
HOLLYWOOD, FLORIDA, 33024
Tel.: (954) 986-1329
Fax: (954) 986-1349

1200 Series Roll Shutters

Date: 12/28/98 | Scale: 1/2"=1" | Designed by: PPMF

Rev. #	Description	Date
1	Review Notes	3/15/99
2	Tranfer Manufacturer NOA	1/23/02

SHEET 2 of 9

Drawing Number 98-01

Detail Sections
Hood Mounts

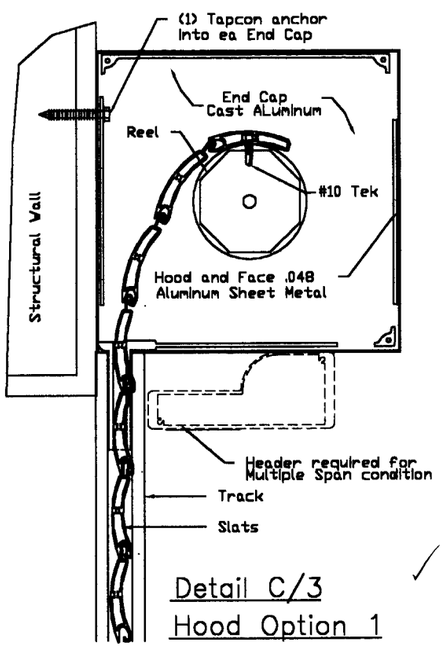

Detail C/3
Hood Option 1

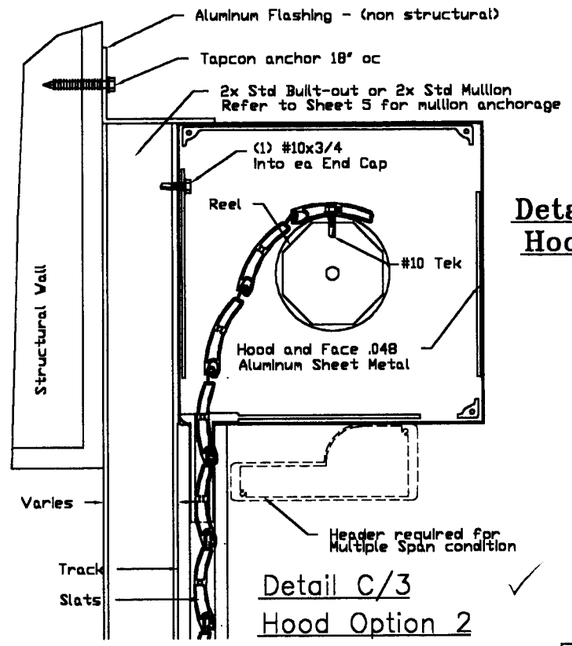

Detail C/3
Hood Option 2

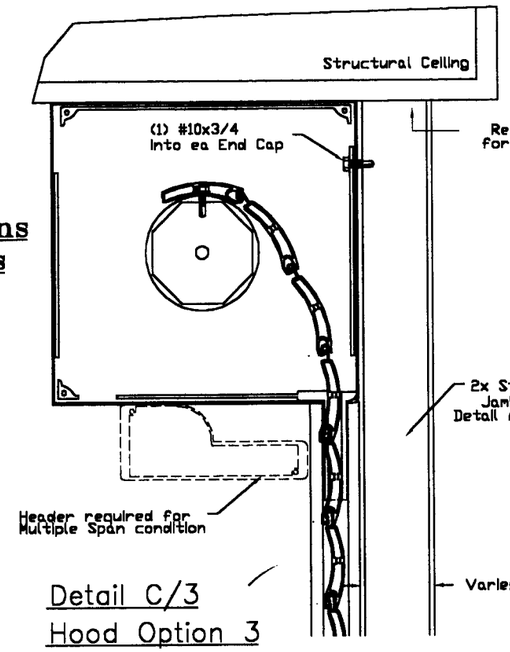

Detail C/3
Hood Option 3

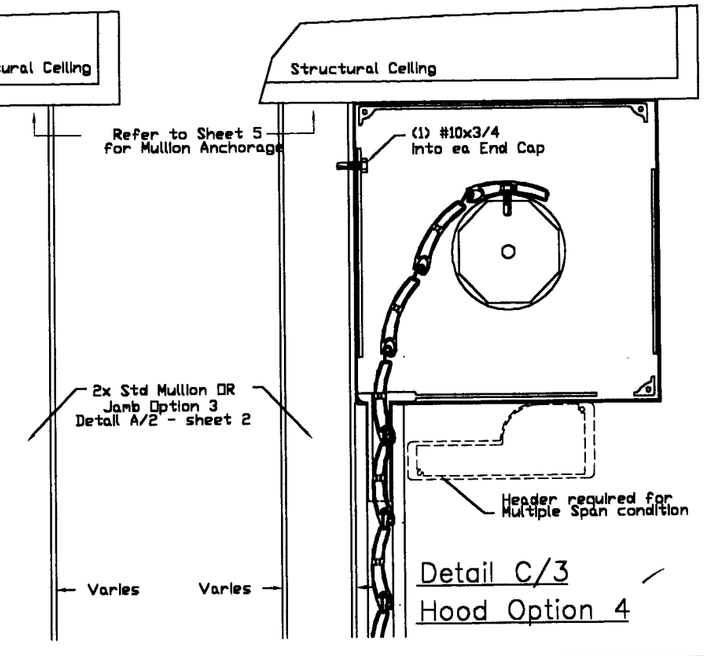

Detail C/3
Hood Option 4

Allowable TT for Headers

1240 Header - Maximum TT - 3 spans

Vbh	Design load 45	55	65	75	100	125	150	175	200
36						152	145	140	132
48	TT=160"				150	141	132	122	114
60			158	152	141	129	118	109	102
72		157	150	145	132	118	108	100	93
84	159	151	145	140	122	109	100	92	86
96	154	146	140	132	114	102	93	86	81
108	149	142	134	125	108	96	88	81	76
120	145	138	127	118	102	91	83	77	72

1240 Header - Maximum TT - 2 spans

Vbh	Design load 45	55	65	75	100	125	150	175	200
36					148	135	125	117	
48	TT=160"			143	128	117	108	101	
60		158	148	128	114	104	97	90	
72	157	145	135	117	104	95	88	82	
84	159	146	134	125	108	97	88	82	76
96	151	136	126	117	101	90	82	76	71
108	142	129	118	110	95	85	78	72	67
120	135	122	112	104	90	81	74	68	64

2x6 Header - Maximum TT - 3 spans

Vbh	Design load 45	55	65	75	100	125	150	175	200
36						155	143	134	
48	TT=160"				147	134	124	116	
60				147	131	120	111	104	
72			155	134	120	109	101	95	
84		154	143	124	111	101	94	87	
96		156	144	134	116	104	95	87	82
108		147	136	126	109	98	89	82	77
120	155	140	129	120	104	93	85	78	73

5040 Header - Maximum TT - 3 spans

Vbh	Design load 45	55	65	75	100	125	150	175	200
36	156	148	142	137	128	121	110	102	95
48	145	138	132	128	117	104	95	88	82
60	137	131	125	121	104	93	85	79	74
72	131	125	118	116	95	85	78	72	67
84	126	119	109	102	88	79	72	66	62
96	122	111	102	95	82	74	67	62	58
108	116	105	96	90	78	69	63	59	55
120	110	99	91	85	74	66	60	56	52

5040 Header - Maximum TT - 2 spans

Vbh	Design load 45	55	65	75	100	125	150	175	200
36	156	148	142	137	119	107	97	90	84
48	145	138	128	119	103	92	84	78	73
60	137	125	115	107	92	82	75	70	65
72	126	114	105	97	84	75	69	63	59
84	116	105	97	90	78	70	63	59	55
96	109	98	90	84	73	65	59	55	51
108	103	93	85	79	69	61	56	52	48
120	97	88	81	75	65	58	53	49	46

2x6 Header - Maximum TT - 2 spans

Vbh	Design load 45	55	65	75	100	125	150	175	200
36						150	137	126	118
48	TT=160"				145	130	118	110	102
60				150	130	116	106	98	92
72			147	137	118	106	97	89	84
84		148	136	126	110	98	89	83	77
96	153	138	127	118	102	92	84	77	72
108	144	130	120	112	97	86	79	73	68
120	137	124	114	106	92	82	75	69	65

2x3 Header - Maximum TT - 3 spans

Vbh	Design load 45	55	65	75	100	125	150	175	200
36	141	134	129	124	113	101	92	85	80
48	131	125	120	113	98	87	80	74	69
60	124	118	108	101	87	78	71	66	62
72	119	107	99	92	80	71	65	60	56
84	110	99	91	85	74	66	60	56	52
96	103	93	86	80	69	62	56	52	49
108	97	88	81	75	65	58	53	49	46
120	92	83	76	71	62	55	50	46	43

2x3 Header - Maximum TT - 2 spans

Vbh	Design load 45	55	65	75	100	125	150	175	200
36	141	134	124	115	100	89	81	75	70
48	129	116	107	100	86	77	70	65	61
60	115	104	96	89	77	69	63	58	54
72	105	95	87	81	70	63	57	53	50
84	97	88	81	75	63	58	53	49	46
96	91	82	76	70	61	54	50	46	43
108	86	77	71	66	57	51	47	43	40
120	81	73	68	63	54	49	44	41	38

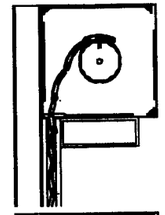

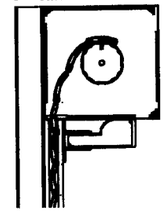

Header Anchorage Selection

AREA = TT X Vbh (sqf)

Allowable Area - 1250 Clip to track
(2) 1/4-14x1 1/2" HWH #3

Spans	Design load 45	55	65	75	100	125	150	175	200
2	117	96	81	70	53	42	35	30	26
3	100	82	69	60	45	36	30	26	22

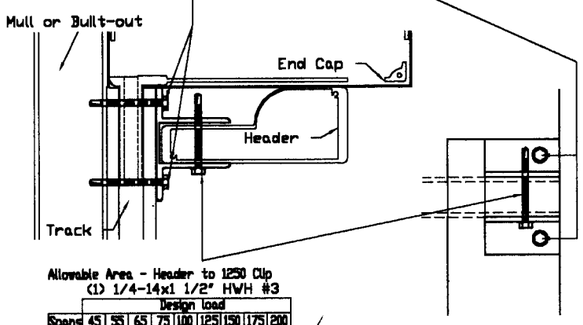

Allowable Area - Header to 1250 Clip
(1) 1/4-14x1 1/2" HWH #3

Spans	Design load 45	55	65	75	100	125	150	175	200
2	190	155	132	114	86	68	57	49	43
3	162	132	112	97	73	58	49	42	36

Allowable Area - 1250 Clip to wall

Pd	A Spans 2	A Spans 3	B Spans 2	B Spans 3	C Spans 2	C Spans 3	H Spans 2	H Spans 3	I Spans 2	I Spans 3
45	183	156	83	71	119	101	238	202	115	98
55	150	128	68	58	97	83	194	166	94	80
65	127	108	57	49	82	70	164	140	80	68
75	110	94	50	42	71	61	143	121	69	59
100	82	70	37	32	53	45	107	91	52	44
125	66	56	30	25	43	36	86	73	41	35
150	55	47	25	21	36	30	71	61	35	29
175	47	40	21	18	31	26	61	52	30	25
200	41	35	19	16	27	23	53	46	26	22

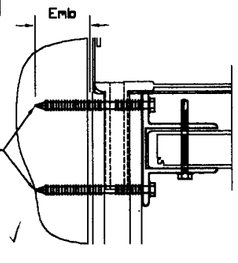

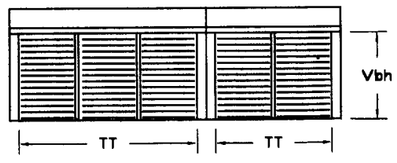

TT - Track to Track Width
VBh - Vertical Bar Height

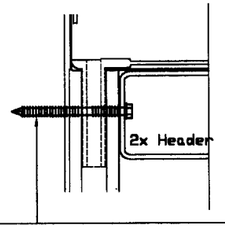

Allowable Area - 2x Header to wall

Pd	A Spans 2	A Spans 3	B Spans 2	B Spans 3	C Spans 2	C Spans 3	H Spans 2	H Spans 3	I Spans 2	I Spans 3
45	92	78	41	35	59	51	119	101	58	49
55	75	64	34	29	49	41	97	83	47	40
65	63	54	29	24	41	35	82	70	40	34
75	55	47	25	21	36	30	71	61	35	29
100	41	35	19	16	27	23	53	46	26	22
125	33	28	15	13	21	18	43	36	21	18
150	27	23	12	11	18	15	36	30	17	15
175	24	20	11	9	15	13	31	26	15	13
200	21	18	9	8	13	11	27	23	13	11

Allowable Area - 2x Header to track
(1) 1/4-14x1 1/2" HWH #3

Spans	Design load 45	55	65	75	100	125	150	175	200
2	58	48	40	35	26	21	18	15	13
3	50	41	34	30	22	18	15	13	11

A - 1/4 Tapcon - 1 3/4" Emb. into 3000 psi concrete, by Elco.
B - 1/4 Tapcon - 1 1/4" Emb. into Hollow block, by Elco.
C - #14 SMS - 1 1/2" emb. into Wood (SG=0.48)
H - #14-10 Crete-Flex w/ - 1 3/4" Emb. into 3300 psi Concrete, by Elco.
I - #14-10 Crete-Flex w/ - 1 1/4" Emb. into Hollow Block, by Elco.

PRODUCT REVISED
as complying with the Florida
Building Code
Acceptance No 02-0201.01
Expiration Date 5/20/07
By:
Miami Dade Product Control
Division

EngCo Inc.
CA 8116
6971 W. SUNRISE BLVD
SUITE 104
PLANTATION FL., 33313
Tel.: (954) 585-0304

JAN 2 5 2002

Pedro De Figueiredo
PE 52809

1200 Series Roll Shutters

JORDAN'S ALUMINUM
116 N. 61ST AVENUE
HOLLYWOOD, FLORIDA, 33024
Tel.: (954) 986-1329
Fax: (954) 986-1349

Date: 12/28/98 | Scale: 1/2"=1" | Designed by: PPMF

Rev. #	Description	Date
1	Review Notes	3/15/99
2	Transfer Manufacturer NOA	1/23/02

SHEET
3 of 9

Drawing Number
98-01

Hood Assembly

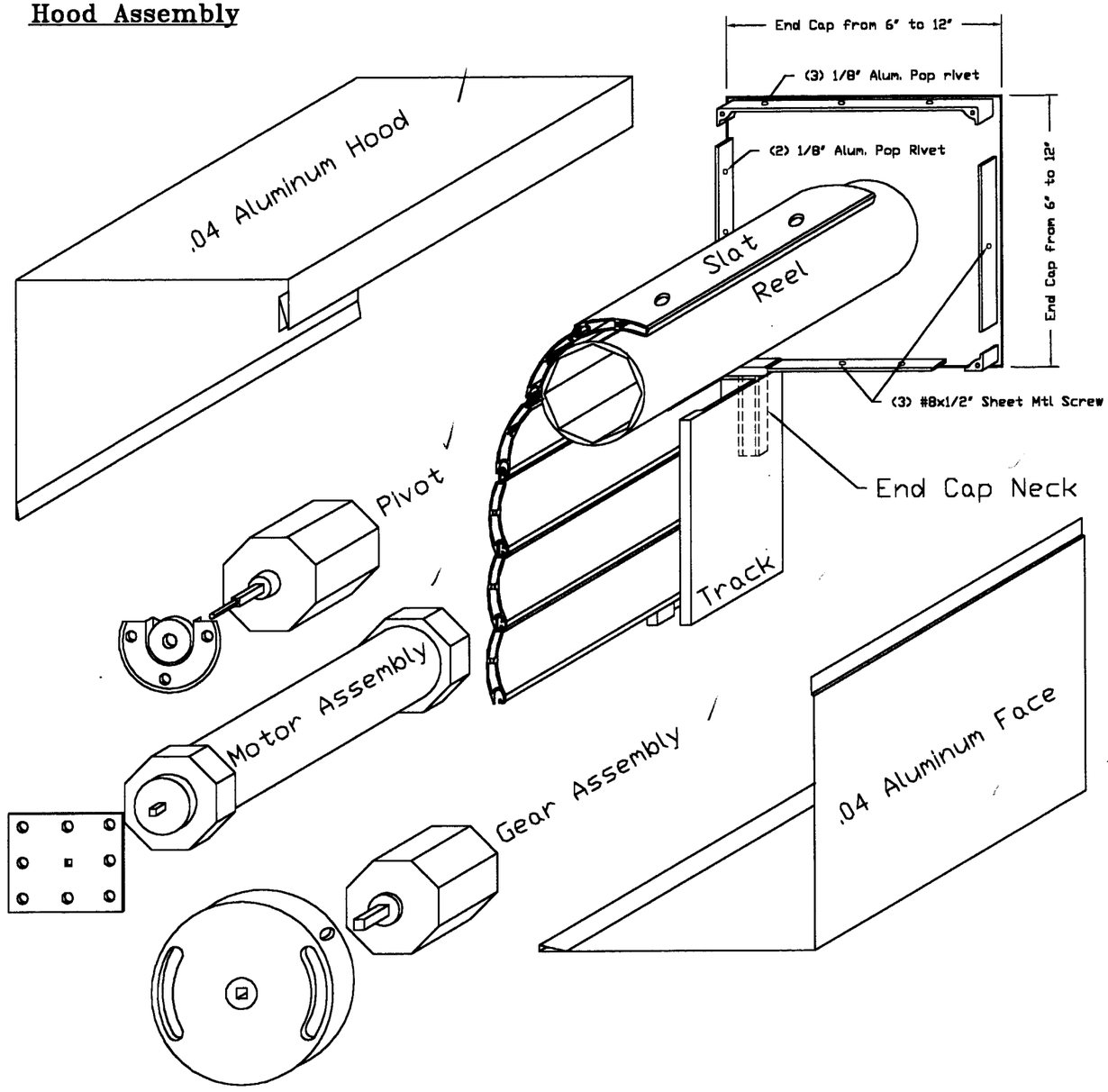

Detail D/4 Sill Option 1

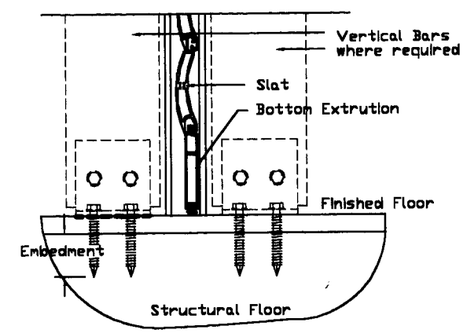

Detail D/4 Sill Option 2

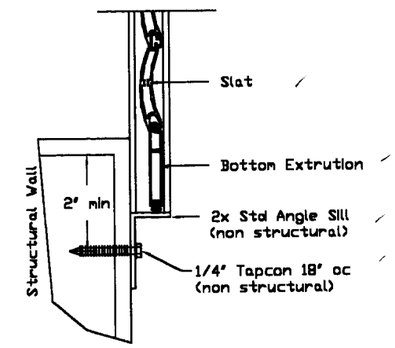

Detail Sections Sill Mount

Detail D/4 Sill Option 3

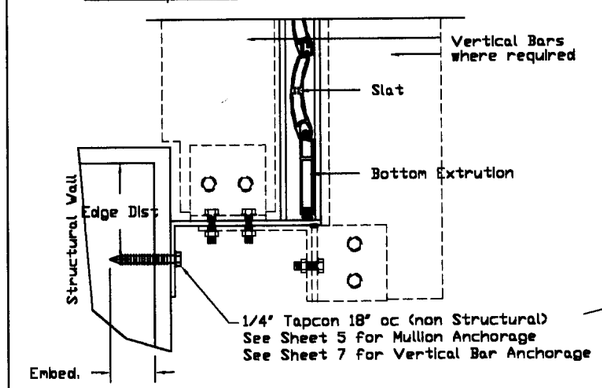

Detail D/4 Sill Option 4

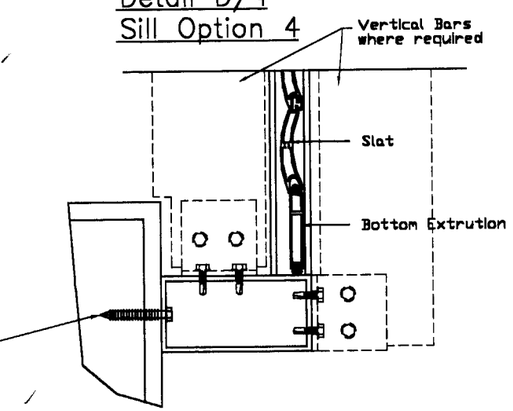

PRODUCT REVISED
as complying with the Florida
Building Code
Acceptance No. 02-0201.01
Expiration date 2/20/07
By
Miami Dade Product Control
Division

EngCo Inc.
CA 8116
6971 W. SUNRISE BLVD
SUITE 104
PLANTATION FL., 33313
Tel.: (954) 585-0304

JAN 25 2002
Pedro De Figueiredo
PE 52809

1200 Series Roll Shutters

JORDAN'S ALUMINUM
116 N. 61ST AVENUE
HOLLYWOOD, FLORIDA, 33024
Tel.: (954) 986-1329
Fax: (954) 986-1349

Date: 12/28/98 | Scale: 1/2"=1" | Designed by: PPMF

Rev. #	Description	Date
1	Review Notes	3/15/99
2	Transfer Manufacturer NOA	1/23/02

Drawing Number 98-01

Mullion Height Selection Tables

Allowable Mullion Height

2x2 MULLION

	Design Load (Pd)							
DW	45	55	65	75	100	125	150	175	200
168	35	33	31	29	27	24	22	20	19
152	36	34	32	30	28	25	23	21	20
136	38	35	33	32	29	27	24	23	21
120	39	37	35	33	30	28	26	24	22
104	41	38	36	35	31	29	27	26	24
88	44	41	38	37	33	31	29	27	26
72	47	44	41	39	36	33	31	29	28
56	51	47	45	43	39	36	34	32	31
40	57	53	50	48	43	40	38	36	34
24	67	63	60	57	52	48	45	43	41

2X3 MULLION

	Design Load (Pd)							
DW	45	55	65	75	100	125	150	175	200
168	49	46	43	41	36	32	29	27	25
152	50	47	45	42	38	34	31	29	27
136	52	49	46	44	40	36	33	30	28
120	55	51	48	46	42	38	35	32	30
104	57	54	51	48	44	41	38	35	32
88	61	57	54	51	46	43	40	38	35
72	65	61	57	55	50	46	43	41	39
56	71	66	62	59	54	50	47	45	43
40	79	74	70	67	60	56	53	50	48
24	94	88	83	79	72	67	63	59	57

2X4 MULLION

	Design Load (Pd)							
DW	45	55	65	75	100	125	150	175	200
168	62	58	55	52	45	40	36	34	31
152	64	60	57	54	47	42	38	35	33
136	66	62	59	56	50	44	41	37	35
120	69	65	61	58	53	47	43	40	37
104	73	68	64	61	56	51	46	43	40
88	77	72	68	65	59	53	50	47	44
72	82	77	73	69	63	58	55	52	48
56	89	84	79	75	68	63	60	57	54
40	100	94	88	84	77	71	67	63	61
24	119	111	105	100	91	84	79	75	72

2X5 MULLION

	Design Load (Pd)							
DW	45	55	65	75	100	125	150	175	200
168	75	70	66	61	53	47	43	40	37
152	77	72	68	64	56	50	45	42	39
136	80	75	71	67	59	53	48	44	41
120	83	78	74	70	63	56	51	47	44
104	88	82	77	74	67	60	55	51	48
88	93	87	82	78	71	66	60	55	52
72	99	93	88	83	76	70	66	61	57
56	108	101	95	91	82	76	72	68	65
40	121	113	107	102	92	86	81	76	73
24	143	134	126	121	110	102	96	91	87

2X6 MULLION

	Design Load (Pd)							
DW	45	55	65	75	100	125	150	175	200
168	87	81	76	71	61	55	50	46	43
152	90	84	80	74	64	57	52	48	45
136	94	87	83	78	68	61	55	51	48
120	98	91	86	82	72	65	59	55	51
104	102	96	90	86	78	69	63	59	55
88	108	101	96	91	83	75	69	64	60
72	116	108	102	98	89	82	76	71	66
56	126	118	111	106	96	89	84	80	75
40	141	132	125	119	108	100	94	89	85
24	167	156	148	141	128	119	112	106	101

Note: Due to many combinations, the mullion tables were designed using a conservative approach. If necessary the design can be reevaluated in a job basis, upon presentation of proper calculation, signed and sealed by the engineer of record.

Tributary width - End Mullion

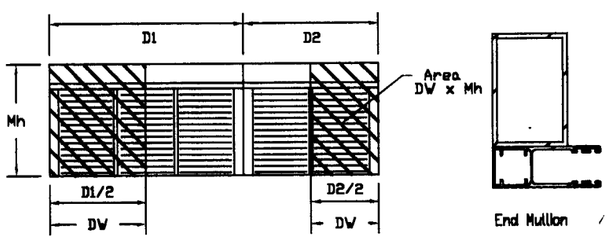

DW = D1/2 or D2/2

Tributary width - Center Mullion

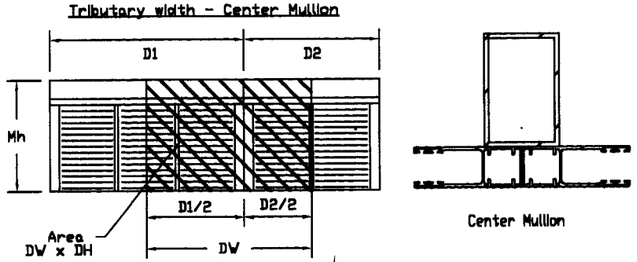

DH - Door Height or Mullion Height
DW = (D1+D2) / 2

Area = DW x DH

Mullion Anchored to Wall

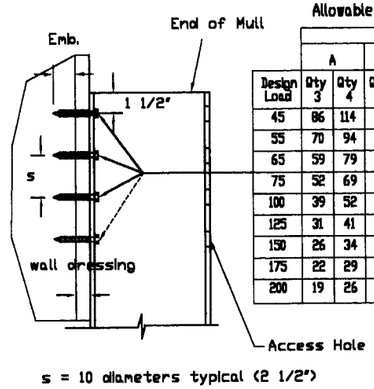

s = 10 diameters typical (2 1/2")

Allowable Tributary Area - (DW x Mh)

	Anchors Type									
	A		B		C		H		I	
Design Load	Qty 3	Qty 4	Qty 3	Qty 4	Qty 3	Qty 4	Qty 3	Qty 4	Qty 3	Qty 4
45	86	114	39	52	75	100	111	148	54	72
55	70	94	32	42	61	81	91	121	44	59
65	59	79	27	36	52	69	77	103	37	50
75	52	69	23	31	45	60	67	89	32	43
100	39	52	17	23	34	45	50	67	24	32
125	31	41	14	19	27	36	40	53	19	26
150	26	34	12	16	22	30	33	45	16	22
175	22	29	10	13	19	26	29	38	14	19
200	19	26	9	12	17	22	25	33	12	16

Mullion Anchored to Floor / Ceiling

Allowable Tributary Area - (DW x Mh) PER CLIP

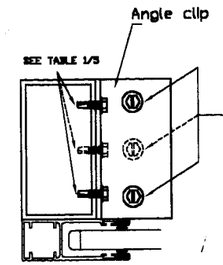

Design Load (Pd)	2" clip			3" clip			4" clip			5" clip			6" clip		
	A	C	H	A	C	H	A	C	H	A	C	H	A	C	H
45	14	7	19	23	12	30	34	17	45	39	20	52	53	26	71
55	12	6	15	19	10	25	28	14	37	32	16	42	43	22	58
65	10	5	13	16	8	21	24	12	31	27	14	36	37	18	49
75	9	4	11	14	7	18	20	10	27	23	12	31	32	16	43
100	6	3	8	10	5	14	15	8	20	17	9	23	24	12	32
125	5	3	7	8	4	11	12	6	16	14	7	19	19	10	26
150	4	2	6	7	4	9	10	5	14	12	6	16	16	8	21
175	4	2	5	6	3	8	9	4	12	10	5	13	14	7	18
200	3	2	4	5	3	7	8	4	10	9	4	12	12	6	16

Note:
1- Multiply the tributary area by 2 if mullion used two clips.
2- Use 2 anchors for 3 and 4" clips
3- Use 1 anchor for 2 clips
4- Use 3 anchors for 5 and 6" clips

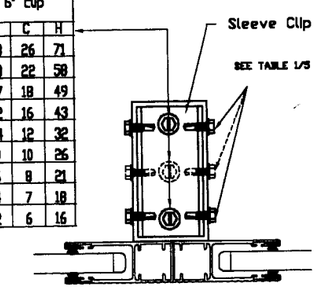

ANCHOR NOTES

A - 1/4 Tapcon - 1 3/4" Emb. into 3000 psi concrete, by Elco.
B - 1/4 Tapcon - 1 1/4" Emb. into Hollow block, by Elco.
C - #14 SMS - 1 1/2" emb. into Wood (SG=0.48)
H - #14-10 Crete-Flex w/ - 1 3/4" Emb. into 3300 psi Concrete, by Elco
I - #14-10 Crete-Flex w/ - 1 1/4" Emb. into Hollow Block, by Elco.
J - #10-16 HWH Drill-Flex, by Elco.
K - 1/4-14 HWH Drill-Flex, by Elco.

Mullion Anchored to Clip

TABLE 1/5
Allowable Tributary Area - (DW x Mh)

Design Load	2 screws		3 screws		4 screws		6 screws	
	J	K	J	K	J	K	J	K
45	50	59	76	89	101	119	151	178
55	41	49	62	73	83	97	124	146
65	35	41	52	62	70	82	105	123
75	30	36	45	53	61	71	91	107
100	23	27	34	40	45	53	68	80
125	18	21	27	32	36	43	55	64
150	15	18	23	27	30	36	45	53
175	13	15	19	23	26	31	39	46
200	11	13	17	20	23	27	34	40

Note: 1- # of screws are total per mullion

Mullion anchored to Angle/Tube
Allowable Tributary Area - (DW x Mh) per CLIP

Design Load (Pd)	2" clip		3" clip		4" clip		5" clip		6" clip	
	J	K	J	K	J	K	J	K	J	K
45	12	19	14	21	25	37	24	34	33	47
55	10	15	12	17	21	30	19	28	27	39
65	8	13	10	14	17	26	16	24	23	33
75	7	11	8	12	15	22	14	21	20	28
100	6	8	6	9	11	17	11	15	15	21
125	4	7	5	7	9	13	9	12	12	17
150	4	6	4	6	8	11	7	10	10	14
175	3	5	4	5	6	10	6	9	9	12
200	3	4	3	5	6	8	5	8	7	11

Note:
1- Multiply the tributary area by 2 if mullion used two clips.
2- Use 2 anchors for 2 and 3" clips
3- Use 3 anchors for 4, 5 and 6" clips

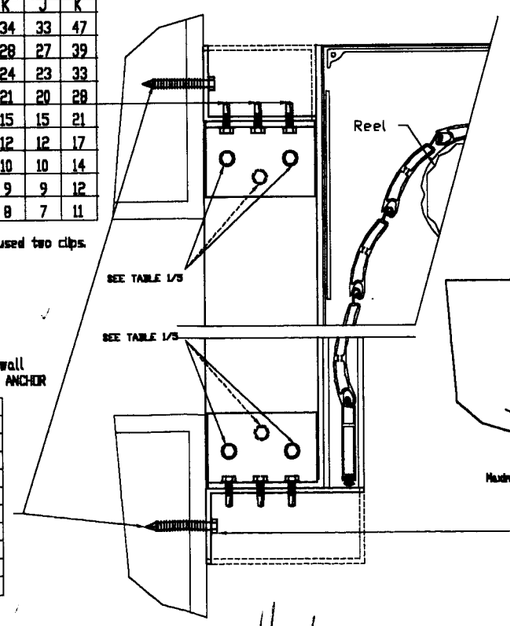

Aluminum Tube/Angle anchored to wall
Allowable Tributary Area - (DW x Mh) per ANCHOR

	Type of anchor				
Pd	A	B	C	H	I
45	14	6	9	19	9
55	12	5	8	15	7
65	10	4	6	13	6
75	9	4	6	11	5
100	6	3	4	8	4
125	5	2	3	7	3
150	4	2	3	6	3
175	4	2	2	5	2
200	3	1	2	4	2

Note: Multiply the tributary area by the number of anchors used.

Mullion Anchored to Angle or Tube

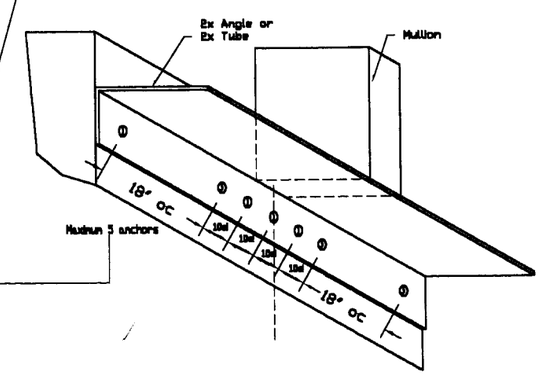

PRODUCT REVISED
as complying with the Florida
Building Code
Acceptance No. 02-0201.01
Expiration Date: 5/20/07
By
Miami Dade Product Control
Division

EngCo Inc.
CA 8116
6971 W. SUNRISE BLVD
SUITE 104
PLANTATION FL., 33313
Tel.: (954) 585-0304

JAN 2 5 2002
Pedro De Figueiredo
PE 52809

1200 Series Roll Shutters

JORDAN'S ALUMINUM
116 N. 61ST AVENUE
HOLLYWOOD, FLORIDA, 33024
Tel.: (954) 986-1329
Fax: (954) 986-1349

Date: 12/28/98 | Scale: 1/2"=1" | Designed by: PPMF

Rev. #	Description	Date
1	Review Notes	3/15/99
2	Transfer Manufacturer NOA	1/23/02

SHEET 5 of 9

Drawing Number 98-01

Allowable Vertical Bar Height – (Vbh)

1X Vertical Bars Tables

1x2 VERTICAL BAR HEIGHT

	Design Load (Pd)								
SPAN	45	55	65	75	100	125	150	175	200
24	74	67	61	57	50	45	41	38	35
30	66	60	55	51	45	40	36	34	31
36	60	55	50	47	41	36	33	31	29
42	56	51	47	43	38	34	31	28	26
48	52	48	44	41	35	31	29	26	25
54	49	45	41	38	33	30	27	25	23
60	47	42	39	36	31	28	25	24	22
66	45	40	37	35	30	27	24	22	21
72	43	39	36	33	29	25	23	21	20
78	41	37	34	32	27	24	22	21	19

1x3 VERTICAL BAR HEIGHT

	Design Load (Pd)								
SPAN	45	55	65	75	100	125	150	175	200
24	99	90	83	77	67	61	55	51	48
30	89	81	74	70	61	54	50	46	43
36	81	74	68	64	55	50	45	42	39
42	76	69	63	59	51	46	42	39	37
48	71	64	59	55	48	43	39	37	34
54	67	61	56	52	45	41	37	35	32
60	64	58	53	50	43	39	35	33	31
66	61	55	51	47	41	37	34	31	29
72	58	53	49	45	39	35	32	30	28
78	56	51	47	44	38	34	31	29	27

1x4 VERTICAL BAR HEIGHT

	Design Load (Pd)								
SPAN	45	55	65	75	100	125	150	175	200
24	120	112	103	96	84	76	69	64	60
30	110	100	93	87	76	68	62	58	54
36	101	92	85	80	69	62	57	53	50
42	94	86	79	74	64	58	53	49	46
48	88	80	74	69	60	54	50	46	43
54	84	76	70	65	57	51	47	43	41
60	80	72	67	62	54	49	44	41	39
66	76	69	64	59	52	46	42	39	37
72	73	66	61	57	50	44	41	38	35
78	70	64	59	55	48	43	39	36	34

2X Vertical Bars Tables

2x2 VERTICAL BAR HEIGHT

	Design Load (Pd)								
SPAN	45	55	65	75	100	125	150	175	200
24	96	87	80	75	64	58	53	49	45
30	86	78	72	67	58	51	47	43	41
36	79	71	65	61	53	47	43	40	37
42	73	66	60	56	49	43	40	37	34
48	68	61	57	53	45	41	37	34	32
54	64	58	53	50	43	38	35	32	30
60	61	55	50	47	41	36	33	31	29
66	58	52	48	45	39	35	32	29	27
72	55	50	46	43	37	33	30	28	26
78	53	48	44	41	36	32	29	27	25

2x3 VERTICAL BAR HEIGHT

	Design Load (Pd)								
SPAN	45	55	65	75	100	125	150	175	200
24	120	116	107	100	86	77	70	65	61
30	115	104	96	89	77	69	63	58	54
36	105	95	87	81	70	63	57	53	50
42	97	88	81	75	65	58	53	49	46
48	91	82	76	70	61	54	50	46	43
54	86	77	71	66	57	51	47	43	40
60	81	73	68	63	54	49	44	41	38
66	77	70	64	60	52	46	42	39	36
72	74	67	62	57	50	44	40	37	35
78	71	64	59	55	48	43	39	36	34

2x4 VERTICAL BAR HEIGHT

	Design Load (Pd)								
SPAN	45	55	65	75	100	125	150	175	200
24	Vbh=120"				106	95	87	80	75
30			117	110	95	85	78	72	67
36		117	107	100	87	78	71	66	61
42	119	108	100	93	80	72	66	61	57
48	112	101	93	87	75	67	61	57	53
54	106	96	88	82	71	63	58	53	50
60	100	91	83	78	67	60	55	51	47
66	96	86	80	74	64	57	52	48	45
72	92	83	76	71	61	55	50	46	43
78	88	80	73	68	59	53	48	44	41

2x5 VERTICAL BAR HEIGHT

	Design Load (Pd)								
SPAN	45	55	65	75	100	125	150	175	200
24						112	102	95	89
30	Vbh=120"				112	100	92	85	79
36				117	102	92	84	78	72
42			117	109	95	85	78	72	67
48		119	109	102	89	79	72	67	63
54		112	103	96	84	75	68	63	59
60	117	107	98	92	79	71	65	60	56
66	112	102	94	87	76	68	62	57	53
72	107	97	90	84	77	65	59	55	51
78	103	94	86	80	70	62	57	52	49

2x6 VERTICAL BAR HEIGHT

	Design Load (Pd)								
SPAN	45	55	65	75	100	125	150	175	200
24							117	108	101
30	Vbh=120"					114	105	97	91
36					117	105	96	89	83
42					108	97	89	82	77
48				117	101	91	83	77	72
54			118	110	96	86	79	73	68
60			112	105	91	82	75	69	65
66		116	107	100	87	78	71	66	62
72		111	103	96	83	75	68	63	59
78	118	107	99	92	80	72	65	61	57

Vb1X Vertical Bars Tables

VB1x3 VERTICAL BAR HEIGHT

	Design Load (Pd)								
SPAN	45	55	65	75	100	125	150	175	200
24	120	118	113	107	94	85	78	72	68
30	117	111	103	97	85	76	70	65	61
36	112	103	95	89	78	70	64	60	56
42	105	96	89	83	72	65	60	55	52
48	99	90	83	78	68	61	56	52	49
54	93	85	79	74	64	58	53	49	46
60	89	81	75	70	61	55	50	47	44
66	85	77	72	67	58	53	48	45	42
72	82	74	69	64	56	50	46	43	40
78	79	72	66	62	54	48	44	41	39

VB1x4 VERTICAL BAR HEIGHT

	Design Load (Pd)								
SPAN	45	55	65	75	100	125	150	175	200
24					113	102	94	87	82
30	Vbh=120"			116	102	92	85	79	74
36			114	107	94	85	78	72	68
42		115	106	100	87	79	72	67	63
48	118	108	100	94	82	74	68	63	59
54	112	102	95	89	78	70	64	60	56
60	107	98	90	85	74	67	61	57	53
66	102	93	86	81	71	64	59	54	51
72	98	90	83	78	68	61	56	52	49
78	95	86	80	75	65	59	54	50	47

VB1x5 VERTICAL BAR HEIGHT

	Design Load (Pd)								
SPAN	45	55	65	75	100	125	150	175	200
24						117	108	100	94
30	Vbh=120"				117	106	97	91	85
36					108	97	90	83	78
42				114	100	91	83	78	73
48			115	108	94	85	78	73	69
54		117	109	102	90	81	74	69	65
60		112	104	97	85	77	71	66	62
66	117	107	99	93	82	74	68	63	59
72	113	103	96	90	78	71	65	60	57
78	109	99	92	86	76	68	63	58	55

VBh – Vertical Bar Height

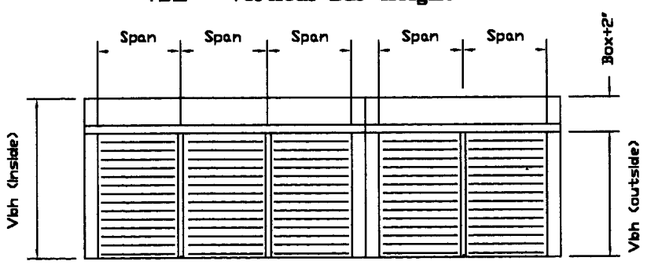

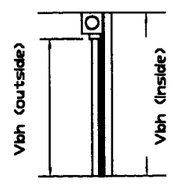

PRODUCT REVISED
as complying with the Florida Building Code
Acceptance No. 02-0201.01
Expiration Date 5/20/07
By
Miami Dade Product Control Division

EngCo Inc.
CA 8116
6971 W. SUNRISE BLVD
SUITE 104
PLANTATION FL., 33313
Tel.: (954) 585-0304

JAN 25 2002
Pedro De Figueiredo
PE 52609

1200 Series Roll Shutters

JORDAN'S ALUMINUM
116 N. 61ST AVENUE
HOLLYWOOD, FLORIDA, 33024
Tel.: (954) 986-1329
Fax: (954) 986-1349

Date: 12/28/98 | Scale: 1/2"=1" | Designed by: PPMF

Rev. #	Description	Date
1	Review Notes	3/15/99
2	Transfer Manufacturer NOA	1/23/02

SHEET 6 of 9

Drawing Number 98-01

Vertical Bar Clip Anchored to Floor/Ceiling

TABLE 2/7
Allowable Area (TT x Vbh) - Clip to Floor/Ceiling
2 SPANS

Design Load	2" clip			3" clip			4" clip			5" clip			6" clip		
	A	C	H	A	C	H	A	C	H	A	C	H	A	C	H
45	45	24	60	73	38	97	109	55	145	124	63	166	170	85	227
55	37	19	49	59	31	79	89	45	119	102	52	136	139	69	186
65	31	16	42	50	26	67	75	38	101	86	44	115	118	59	157
75	27	14	36	44	23	58	65	33	87	75	38	100	102	51	136
100	20	11	27	33	17	43	49	25	65	56	28	75	76	38	102
125	16	9	22	26	14	35	39	20	52	45	23	60	61	30	82
150	14	7	18	22	11	29	33	16	44	37	19	50	51	25	68
175	12	6	16	19	10	25	28	14	37	32	16	43	44	22	58
200	10	5	14	16	9	22	24	12	33	28	14	37	38	19	51

Notes: 1- Use 2 anchors for 2" Clip
2- Use 4 anchors for 3" Clip and 4" clip
3- Use 6 anchors for 5" and 6" Clip
4- Increase Allowable area 1.7 times for 3 spans condition

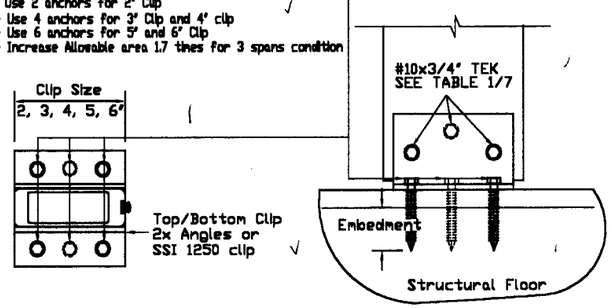

Vertical Bar Clip Anchored to Wall

TABLE 3/7
Allowable Area (TT x Vbh) - Clip to wall with two anchors

Design Load	A Spans		B Spans		C Spans		H Spans		I Spans		J Spans		K Spans	
	2	3	2	3	2	3	2	3	2	3	2	3	2	3
45	92	156	41	70	59	101	119	202	58	98	35	59	58	100
55	75	128	34	58	49	83	97	165	47	80	28	48	48	81
65	63	108	29	49	41	70	82	140	40	68	24	41	40	69
75	55	94	25	42	36	61	71	121	35	59	21	35	35	60
100	41	70	19	32	27	45	53	91	26	44	16	26	26	45
125	33	56	15	25	21	36	43	73	21	35	12	21	21	36
150	27	47	12	21	18	30	36	61	17	29	10	18	18	30
175	24	40	11	18	15	26	31	52	15	25	9	15	15	26
200	21	35	9	16	13	23	27	46	13	22	8	13	13	22

Note: 4 anchors multiply the area by 2
6 anchors multiply the area by 3

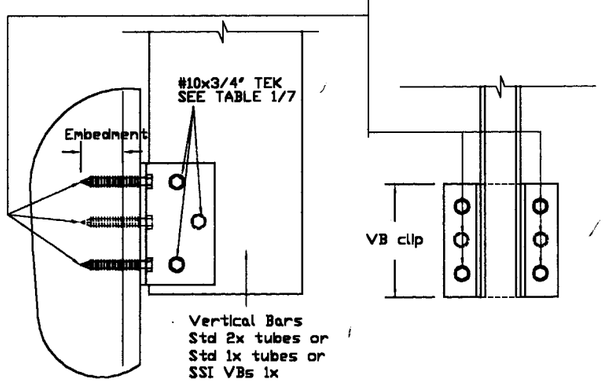

Vertical Bar Anchored to Clip

TABLE 1/7
Allowable Area - (TT x Vbh) per connection
2 Spans

Design Load Pd	# of anchors					
	2 Anchors		4 Anchors		6 Anchors	
	J	K	J	K	J	K
45	81	95	162	190	242	285
55	66	78	132	155	198	233
65	56	66	112	132	168	197
75	48	57	97	114	145	171
100	36	43	73	86	109	128
125	29	34	58	68	87	103
150	24	29	48	57	73	86
175	21	24	42	49	62	73
200	18	21	36	43	55	64

Notes: 1- Increase Allowable area 1.7 times for 3 spans condition

TABLE 4/7
Allowable Area (TT x Vbh) - Clip to Tube/Angle
2 SPANS

Design Load Pd	2" clip		3" clip		4" clip		5" clip		6" clip	
	J	K	J	K	J	K	J	K	J	K
45	24	36	48	72	63	91	88	128	101	144
55	20	30	40	59	52	75	72	105	82	118
65	17	25	33	50	44	63	61	89	70	100
75	15	22	29	43	38	55	53	77	60	87
100	11	16	22	33	28	41	40	58	45	65
125	9	13	17	26	23	33	32	46	36	52
150	7	11	15	22	19	27	26	39	30	43
175	6	9	12	19	16	23	23	33	26	37
200	5	8	11	16	14	21	20	29	23	32

Notes: 1- Use 2 anchors for 2" Clip
2- Use 4 anchors for 3" Clip and 4" clip
3- Use 6 anchors for 5" and 6" Clip
4- Increase Allowable area 1.7 times for 3 spans condition

TABLE 5/7
Allowable Door Area (TT x Vbh) per anchor - Angle / Tube anchored to wall

Design Load	A Spans		B Spans		C Spans		H Spans		I Spans		J Spans		K Spans	
	2	3	2	3	2	3	2	3	2	3	2	3	2	3
45	23	39	10	18	15	25	30	50	14	24	9	15	15	25
55	19	32	8	14	12	21	24	41	12	20	7	12	12	20
65	16	27	7	12	10	17	21	35	10	17	6	10	10	17
75	14	23	6	11	9	15	18	30	9	15	5	9	9	15
100	10	18	5	8	7	11	13	23	6	11	4	7	7	11
125	8	14	4	6	5	9	11	18	5	9	3	5	5	9
150	7	12	3	5	4	8	9	15	4	7	3	4	4	7
175	6	10	3	5	4	6	8	13	4	6	2	4	4	6
200	5	9	2	4	3	6	7	11	3	6	2	3	3	6

Note: Multiply Allowable area times the number of screws used. Maximum 5 screws.
See Isometric on sheet 5 for anchorage detail

Vertical Bar Anchored to Angle or Tube

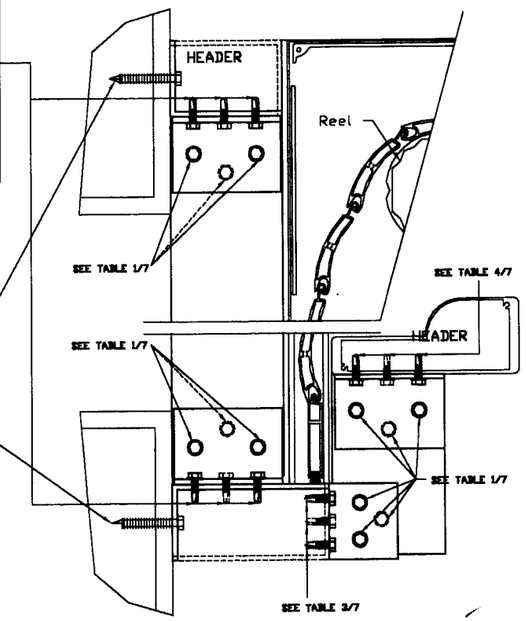

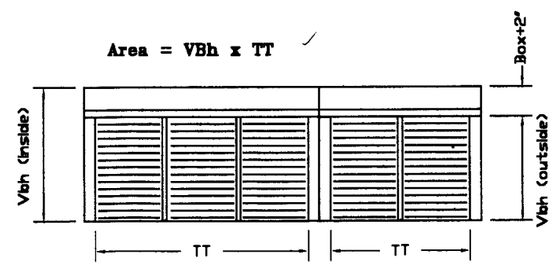

ANCHOR NOTES

A - 1/4 Tapcon - 1 3/4" Emb. into 3000 psi concrete, by Elco.
B - 1/4 Tapcon - 1 1/4" Emb. into Hollow block, by Elco.
C - #14 SMS - 1 1/2" emb. into Wood (SG=0.55)
H - #14-10 Crete-Flex w/ - 1 3/4" Emb. into 3300 psi Concrete, by Elco.
I - #14-10 Crete-Flex w/ - 1 1/4" Emb. into Hollow Block, by Elco.
J - #10-16 Drill-Flex, by Elco.
K - 1/4-14 Drill-Flex, by Elco.

PRODUCT REVISED
as complying with the Florida
Building Code
Acceptance No. 02-0201.01
Expiration Date: 3/20/07
By:
Miami Dade Product Control
Division

EngCo Inc.
CA 8116
6971 W. SUNRISE BLVD
SUITE 104
PLANTATION FL., 33313
Tel.: (954) 585-0304

JAN 2 5 2002

Pedro De Figueiredo
PE 52809

1200 Series Roll Shutters

JORDAN'S ALUMINUM
116 N. 61ST AVENUE
HOLLYWOOD, FLORIDA, 33024
Tel.: (954) 986-1329
Fax: (954) 986-1349

Date: 12/28/98 | Scale: 1/2"=1" | Designed by: PPMF

Rev. #	Description	Date
1	Review Notes	3/15/99
2	Tranfer Manufacturer NOA	1/23/02

SHEET
7 of 9

Drawing Number
98-01

Track Anchor Spacing Design

Unit #	Pd	TT	# Spans	Span	Detail Jamb Option	Anchor Type	Anchor Spacing	#10-16 Drill Flex Spacing

Note: 1- Manufacturer to provide the information above for each job.
2- If more rows are required, include another copy of sheet 8 of 9.
3- Slat Span must not exceed Table 1/2 on sheet 2 of 9.
4- All fasteners must not exceed the allowable spacing values.
5- A computer print out signed and sealed by the engineer of record can replace this approved sheet.

(Track Anchor Spacing - Detail A/2 - Jamb option 1)

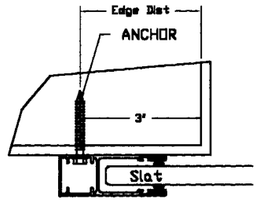

Anchor Spacing Anchor A

SPAN	Design Load (Pd) 45	55	65	75	100	125	150	175	200
24	13	13	13	13	13	13	11	9	8
30	13	13	13	13	13	11	9	7	6
36	13	13	13	13	11	9	7	6	5
42	13	13	13	13	9	7	6	5	4
48	13	13	13	11	8	6	5	4	4
54	13	13	11	10	7	6	5	4	3
60	13	12	10	9	6	5	4	3	3
66	13	11	9	8	6	5	4	3	3
72	12	10	8	7	5	4	3	3	
78	11	9	8	7	5	4	3	3	

Anchor Spacing Anchor B

SPAN	Design Load (Pd) 45	55	65	75	100	125	150	175	200
24	13	13	12	10	7	6	5	4	3
30	13	11	9	8	6	5	4	3	3
36	11	9	8	7	5	4	3	3	
42	10	8	6	6	4	3	3		
48	8	7	6	5	3	3			
54	7	6	5	4	3				
60	7	5	4	4	3				
66	6	5	4	3					
72	5	4	4	3					
78	5	4	3	3					

Anchor Spacing Anchor C

SPAN	Design Load (Pd) 45	55	65	75	100	125	150	175	200
24	13	13	13	13	11	9	7	6	5
30	13	13	13	12	9	7	6	5	4
36	13	13	11	10	7	6	5	4	3
42	13	11	9	8	6	5	4	3	3
48	12	10	8	7	5	4	3	3	
54	11	9	7	6	5	4	3		
60	10	8	6	6	4	3	3		
66	9	7	6	5	4	3			
72	8	6	5	5	3	3			
78	7	6	5	4	3				

Anchor Spacing Anchor H

SPAN	Design Load (Pd) 45	55	65	75	100	125	150	175	200
24	13	13	13	13	13	13	13	12	11
30	13	13	13	13	13	13	12	10	9
36	13	13	13	13	13	12	10	8	7
42	13	13	13	13	12	10	8	7	6
48	13	13	13	13	11	9	7	6	5
54	13	13	13	13	10	8	6	5	5
60	13	13	13	12	9	7	6	5	4
66	13	13	12	10	8	6	5	4	4
72	13	13	11	10	7	6	5	4	3
78	13	12	10	9	6	5	4	3	3

Anchor Spacing Anchor I

SPAN	Design Load (Pd) 45	55	65	75	100	125	150	175	200
24	13	13	13	13	10	8	7	6	5
30	13	13	13	11	8	7	5	5	4
36	13	13	11	9	7	5	4	4	3
42	13	11	9	8	6	5	4	3	3
48	12	9	8	7	5	4	3	3	
54	10	8	7	6	4	3	3		
60	9	7	6	5	4	3			
66	8	7	6	5	3	3			
72	8	6	5	4	3				
78	7	6	5	4	3				

(Track Anchor Spacing - Detail A/2 - Jamb option 2)

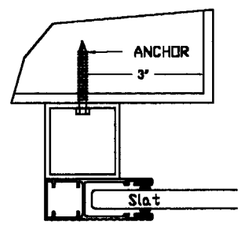

Anchor Spacing Anchor A

SPAN	Design Load (Pd) 45	55	65	75	100	125	150	175	200
24	13	13	13	13	13	13	13	13	13
30	13	13	13	13	13	13	13	13	13
36	13	13	13	13	13	13	13	13	13
42	13	13	13	13	13	13	13	13	11
48	13	13	13	13	13	13	13	11	10
54	13	13	13	13	13	13	12	10	9
60	13	13	13	13	13	13	11	9	8
66	13	13	13	13	13	12	10	8	7
72	13	13	13	13	13	11	9	7	6
78	13	13	13	13	12	10	8	7	6

Anchor Spacing Anchor B

SPAN	Design Load (Pd) 45	55	65	75	100	125	150	175	200
24	13	13	13	13	13	13	12	10	9
30	13	13	13	13	13	12	10	8	7
36	13	13	13	13	12	10	8	7	6
42	13	13	13	13	10	8	7	6	5
48	13	13	13	12	9	7	6	5	4
54	13	13	12	11	8	6	5	4	4
60	13	13	11	10	7	6	5	4	3
66	13	12	10	9	6	5	4	3	3
72	13	11	9	8	6	5	4	3	3
78	12	10	8	7	5	4	3	3	

Anchor Spacing Anchor C

SPAN	Design Load (Pd) 45	55	65	75	100	125	150	175	200
24	13	13	13	13	13	13	13	13	13
30	13	13	13	13	13	13	13	12	10
36	13	13	13	13	13	13	12	10	9
42	13	13	13	13	13	12	10	8	7
48	13	13	13	13	13	10	9	7	6
54	13	13	13	13	12	9	8	6	6
60	13	13	13	13	10	8	7	6	5
66	13	13	13	13	9	7	6	5	4
72	13	13	13	12	9	7	6	5	4
78	13	13	12	11	8	6	5	4	4

Anchor Spacing Anchor H

SPAN	Design Load (Pd) 45	55	65	75	100	125	150	175	200
24	13	13	13	13	13	13	13	13	13
30	13	13	13	13	13	13	13	13	13
36	13	13	13	13	13	13	13	13	13
42	13	13	13	13	13	13	13	13	13
48	13	13	13	13	13	13	13	13	13
54	13	13	13	13	13	13	13	13	12
60	13	13	13	13	13	13	13	12	10
66	13	13	13	13	13	13	13	11	9
72	13	13	13	13	13	13	12	10	9
78	13	13	13	13	13	13	11	9	8

Anchor Spacing Anchor I

SPAN	Design Load (Pd) 45	55	65	75	100	125	150	175	200
24	13	13	13	13	13	13	13	13	13
30	13	13	13	13	13	13	13	12	10
36	13	13	13	13	13	13	11	10	8
42	13	13	13	13	13	12	10	8	7
48	13	13	13	13	13	10	8	7	6
54	13	13	13	13	11	9	7	6	5
60	13	13	13	13	10	8	7	6	5
66	13	13	13	12	9	7	6	5	4
72	13	13	13	11	8	7	5	5	4
78	13	13	12	10	8	6	5	4	4

(Track Anchor Spacing - Detail A/2 - Jamb option 3)

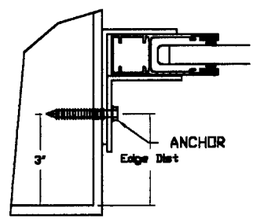

Anchor Spacing Anchor A

SPAN	Design Load (Pd) 45	55	65	75	100	125	150	175	200
24	13	13	13	13	13	13	13	13	12
30	13	13	13	13	13	13	13	11	10
36	13	13	13	13	13	13	11	9	8
42	13	13	13	13	13	11	9	8	7
48	13	13	13	13	12	10	8	7	6
54	13	13	13	13	11	8	7	6	5
60	13	13	13	13	10	8	6	5	5
66	13	13	13	12	9	7	6	5	4
72	13	13	12	11	8	6	5	4	4
78	13	13	11	10	7	6	5	4	3

Anchor Spacing Anchor B

SPAN	Design Load (Pd) 45	55	65	75	100	125	150	175	200
24	13	13	13	13	13	10	8	7	6
30	13	13	13	13	10	8	7	6	5
36	13	13	13	11	8	7	5	5	4
42	13	13	11	10	7	6	5	4	3
48	13	12	10	8	6	5	4	3	3
54	13	10	9	7	5	4	3	3	
60	11	9	8	7	5	4	3	3	
66	10	8	7	6	4	3	3		
72	9	8	6	5	4	3			
78	9	7	6	5	4	3			

Anchor Spacing Anchor C

SPAN	Design Load (Pd) 45	55	65	75	100	125	150	175	200
24	13	13	13	13	13	11	9	8	7
30	13	13	13	13	11	9	7	6	5
36	13	13	13	12	9	7	6	5	4
42	13	13	13	10	8	6	5	4	4
48	13	12	10	9	7	5	4	4	3
54	13	11	9	8	6	5	4	3	3
60	12	10	8	7	5	4	3	3	
66	11	9	7	6	5	4	3		
72	10	8	7	6	4	3	3		
78	9	7	6	5	4	3			

Anchor Spacing Anchor H

SPAN	Design Load (Pd) 45	55	65	75	100	125	150	175	200
24	13	13	13	13	13	13	13	13	13
30	13	13	13	13	13	13	13	13	13
36	13	13	13	13	13	13	13	12	11
42	13	13	13	13	13	13	12	10	9
48	13	13	13	13	13	13	11	9	8
54	13	13	13	13	13	11	9	8	7
60	13	13	13	13	13	10	8	7	6
66	13	13	13	13	12	9	8	6	6
72	13	13	13	13	11	8	7	6	5
78	13	13	13	13	10	8	6	5	5

Anchor Spacing Anchor I

SPAN	Design Load (Pd) 45	55	65	75	100	125	150	175	200
24	13	13	13	13	13	13	10	9	8
30	13	13	13	13	13	10	8	7	6
36	13	13	13	13	10	8	7	6	5
42	13	13	13	12	9	7	6	5	4
48	13	13	12	10	8	6	5	4	4
54	13	13	11	9	7	5	4	4	3
60	13	11	10	8	6	5	4	3	3
66	13	10	9	7	5	4	3	3	
72	12	9	8	7	5	4	3	3	
78	11	9	7	6	5	4	3		

ANCHOR SPACING SHOULD NOT EXCEED 13 1/2" OC AND NOT BE LESS THAN 3" OC

ANCHORS SCHEDULE

A - 1/4 Tapcon - 1 3/4" Emb. into 3000 psi concrete, by Elco.
B - 1/4 Tapcon - 1 1/4" Emb. into Hollow block, by Elco.
C - #14 SMS - 1 1/2" emb. into Wood (SG=0.48)
H - #14-10 Crete-Flex w/ - 1 3/4" Emb. into 3300 psi Concrete, by Elco.
I - #14-10 Crete-Flex w/ - 1 1/4" Emb. into Hollow Block, by Elco.

Reduction Factors for Edge Distance (Re)

Edge Dist.	12d	11d	10d	9d	8d	7d	6d	5d
Re	1.0	.97	.94	.91	.89	.86	.83	.80

Notes: 1- Maximum Spacing not to exceed 13 1/2"
2- Two Span Condition multiply spacing by 1.33
3- Three Span Condition multiply spacing by 1.25
4- Anchor calculations are based on 12d (3") edge distance
If edge distance is less than 3", use reduction factor to reduce the anchor spacing.

Assembly Screws Spacing - #10-16 Drill Flex

(Detail A/2 - Option 2, 3 and 4)
(Detail B/2)

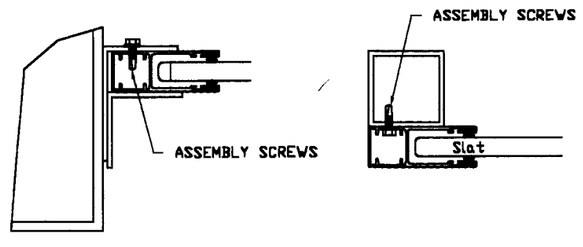

SPAN	Design Load (Pd) 45	55	65	75	100	125	150	175	200
24	13	13	13	13	13	12	10	9	8
30	13	13	13	13	12	10	8	7	6
36	13	13	13	13	10	8	7	6	5
42	13	13	13	12	9	7	6	5	4
48	13	13	12	10	8	6	5	4	4
54	13	13	11	9	7	5	4	4	3
60	13	11	9	8	6	5	4	3	3
66	13	10	9	7	5	4	3	3	2
72	11	9	8	7	5	4	3	3	2
78	11	9	7	6	4	3	3	2	2

Notes: 1- Maximum Spacing not to exceed 13 1/2"
2- Two Span Condition multiply spacing by 1.33
3- Three Span Condition multiply spacing by 1.25

PRODUCT APPROVED
as complying with the Florida
Building Code
Acceptance No. 02-0201.01
Expiration Date 5/20/07
By
Miami Dade Product Control
Division

EngCo Inc.
CA 8116
6971 W. SUNRISE BLVD
SUITE 104
PLANTATION FL., 33313
Tel.: (954) 585-0304

JAN 25 2002
Pedro De Figueiredo
PE 52809

1200 Series Roll Shutters

JORDAN'S ALUMINUM
116 N. 61ST AVENUE
HOLLYWOOD, FLORIDA, 33024
Tel.: (954) 986-1329
Fax: (954) 986-1349

Date: 12/28/98 | Scale: 1/2"=1" | Designed by: PPMF

Rev. #	Description	Date
1	Review Notes	3/15/99
2	Tranfer Manufacturer NOA	1/23/02

SHEET 8 of 9

Drawing Number 98-02

Slat Deflection - Table 1/9

Pd	TT 40	46	52	58	64	70	76	82	88	94	100	106	112	118	124	130	136	142	148	154	# Span
45	.01	.01	.02	.04	.05	.08	.11	.15	.20	.26	.33	.41	.51	.63	.77	.93	1.12	1.33	1.57	1.84	2
	.00	.00	.01	.01	.01	.02	.03	.04	.05	.06	.08	.10	.13	.16	.19	.24	.28	.33	.40	.46	3
55	.01	.02	.03	.05	.07	.10	.13	.18	.24	.31	.40	.50	.63	.77	.94	1.14	1.37	1.62	1.92	2.25	2
	.00	.00	.01	.01	.02	.02	.03	.05	.06	.08	.10	.13	.16	.20	.24	.29	.34	.41	.48	.57	3
65	.01	.02	.03	.05	.08	.11	.16	.21	.28	.37	.47	.60	.74	.91	1.12	1.35	1.61	1.92	2.26	2.65	2
	.00	.01	.01	.01	.02	.03	.04	.05	.07	.09	.12	.15	.19	.23	.28	.34	.41	.48	.57	.67	3
75	.01	.02	.04	.06	.09	.13	.18	.25	.33	.43	.54	.69	.86	1.06	1.29	1.56	1.86	2.21	2.61	3.06	2
	.00	.01	.01	.02	.02	.03	.05	.06	.08	.11	.14	.17	.22	.27	.32	.39	.47	.56	.66	.77	3
100	.02	.03	.05	.08	.12	.17	.24	.33	.44	.57	.73	.92	1.14	1.41	1.72	2.07	2.48	2.95	3.48	4.08	2
	.00	.01	.01	.02	.03	.04	.06	.08	.11	.14	.18	.23	.29	.35	.43	.52	.63	.74	.88	1.03	3
125	.02	.04	.07	.10	.15	.22	.30	.41	.54	.71	.91	1.15	1.43	1.76	2.15	2.59	3.10	3.69	4.35	5.10	2
	.01	.01	.02	.03	.04	.05	.08	.10	.14	.18	.23	.29	.36	.44	.54	.65	.78	.93	1.10	1.29	3
150	.03	.05	.08	.12	.18	.26	.36	.49	.65	.85	1.09	1.37	1.71	2.11	2.57	3.11	3.73	4.43	5.22	6.13	2
	.01	.01	.02	.03	.05	.07	.09	.12	.16	.21	.27	.35	.43	.53	.65	.78	.94	1.12	1.32	1.54	3
175	.03	.06	.09	.14	.21	.31	.42	.57	.76	.99	1.27	1.60	2.00	2.46	3.00	3.63	4.35	5.17	6.10	7.15	2
	.01	.01	.02	.04	.05	.08	.11	.14	.19	.25	.32	.40	.50	.62	.76	.91	1.10	1.30	1.54	1.80	3
200	.04	.07	.11	.16	.24	.35	.48	.66	.87	1.13	1.45	1.83	2.28	2.82	3.43	4.15	4.97	5.90	6.97	8.17	2
	.01	.02	.03	.04	.06	.09	.12	.17	.22	.29	.37	.46	.58	.71	.87	1.05	1.25	1.49	1.76	2.06	3

Table 2/9

Def Header = (Vbh/100) x (TT/100)^4) x (Pd/10) x Kh = (Table value) x (Pd/10) x Kh

Def Vertical Bar = (TT/100) x (Vbh/100)^4 x (Pd/10) x Kvb = (Table value) x (Pd/10) x Kvb

Pd=10psf	TT (TT / 100)^4 or Vbh (Vbh/100)^4	40	46	52	58	64	70	76	82	88	94	100	106	112	118	124	130	136	142	148	154
Vbh (Vbh/100) or TT (TT/100)	40	.01	.02	.03	.05	.07	.10	.13	.18	.24	.31	.40	.50	.63	.78	.95	1.14	1.37	1.63	1.92	2.25
	46	.01	.02	.03	.05	.08	.11	.15	.21	.28	.36	.46	.58	.72	.89	1.09	1.31	1.57	1.87	2.21	2.59
	52	.01	.02	.04	.06	.09	.12	.17	.24	.31	.41	.52	.66	.82	1.01	1.23	1.49	1.78	2.11	2.49	2.92
	58	.01	.03	.04	.07	.10	.14	.19	.26	.35	.45	.58	.73	.91	1.12	1.37	1.66	1.98	2.36	2.78	3.26
	64	.02	.03	.05	.07	.11	.15	.21	.29	.38	.50	.64	.81	1.01	1.24	1.51	1.83	2.19	2.60	3.07	3.60
	70	.02	.03	.05	.08	.12	.17	.23	.32	.42	.55	.70	.88	1.10	1.36	1.65	2.00	2.39	2.85	3.36	3.94
	76	.02	.03	.06	.09	.13	.18	.25	.34	.46	.59	.76	.96	1.20	1.47	1.80	2.17	2.60	3.09	3.65	4.27
	82	.02	.04	.06	.09	.14	.20	.27	.37	.49	.64	.82	1.04	1.29	1.59	1.94	2.34	2.81	3.33	3.93	4.61
	88	.02	.04	.06	.10	.15	.21	.29	.40	.53	.69	.88	1.11	1.38	1.71	2.08	2.51	3.01	3.58	4.22	4.95
	94	.02	.04	.07	.11	.16	.23	.31	.42	.56	.73	.94	1.19	1.48	1.82	2.22	2.68	3.22	3.82	4.51	5.29
	100	.03	.04	.07	.11	.17	.24	.33	.45	.60	.78	1.00	1.26	1.57	1.94	2.36	2.86	3.42	4.07	4.80	5.62
	106	.03	.05	.08	.12	.18	.25	.35	.48	.64	.83	1.06	1.34	1.67	2.06	2.51	3.03	3.63	4.31	5.09	5.96
	112	.03	.05	.08	.13	.19	.27	.37	.51	.67	.87	1.12	1.41	1.76	2.17	2.65	3.20	3.83	4.55	5.37	6.30
	118	.03	.05	.09	.13	.20	.28	.39	.53	.71	.92	1.18	1.49	1.86	2.29	2.79	3.37	4.04	4.80	5.66	6.64
	124	.03	.06	.09	.14	.21	.30	.41	.56	.74	.97	1.24	1.57	1.95	2.40	2.93	3.54	4.24	5.04	5.95	6.97
	130	.03	.06	.10	.15	.22	.31	.43	.59	.78	1.01	1.30	1.64	2.05	2.52	3.07	3.71	4.45	5.29	6.24	7.31
	136	.03	.06	.10	.15	.23	.33	.45	.61	.82	1.06	1.36	1.72	2.14	2.64	3.22	3.88	4.65	5.53	6.53	7.65
	142	.04	.06	.10	.16	.24	.34	.47	.64	.85	1.11	1.42	1.79	2.23	2.75	3.36	4.06	4.86	5.77	6.81	7.99
	148	.04	.07	.11	.17	.25	.36	.49	.67	.89	1.16	1.48	1.87	2.33	2.87	3.50	4.23	5.06	6.02	7.10	8.32
	154	.04	.07	.11	.17	.26	.37	.51	.70	.92	1.20	1.54	1.94	2.42	2.99	3.64	4.40	5.27	6.26	7.39	8.66

Calculation of Slat Deflection

Step 1 - Find deflection by crossing references on Slat Deflection Table 1/9
Step 2 - Interpolate values if necessary

Example: TT=124" Pd=50 psf Two Span

Using table 124 x 45 - def = .77"
Using table 124 x 55 - def = .94"
Interpolating to 124 x 50 - defs = .86"

Calculation of Vertical Bar Deflection

Span Condition	K vb 1x2	1x3	1x4
Two Span	1.7125	0.5949	0.2770
Three Span	1.0047	0.3490	0.1625

Span Condition	K vb Vb1x3	Vb1x4	Vb1x5
Two Span	0.3871	0.1884	0.1081
Three Span	0.2271	0.1105	0.0634

Span Condition	K vb 2x2	2x3	2x4	2x5	2x6
Two Span	1.0275	0.3844	0.1896	0.1087	0.0683
Three Span	0.6028	0.2255	0.1113	0.0638	0.0400

Step 1 - Find the proper coeficient Kvb
Step 2 - Divide the Design pressure by 10 (Pd/10)
Step 3 - Find the proper Table 2/9 value for TT (rows) x Vbh (columns)
Step 4 - Deflection = Kvb x (Pd/10) x table 2/9 value
Step 5 - Interpole values if necessary.

Example: TT=124" Pd=50 psf Two Spans Vb1x3 @ 88" (inside) Vb1x3 @ 76" (outside)

Kvb= .3871 (from above tables)
Pd/10= 5
TT x Vbh table = .74" (inside) .41 (outside)
Def. vb = .74 x 5 x .3871 = 1.43" (inside)
Def. vb = .41 x 5 x .3871 = .79" (inside)

Calculation of Header Deflection

Header	K h 1240	5040
Two and Three Spans	0.0822	0.2055
Header	2x3	2x6
Two and Three Spans	0.3076	0.0546

Step 1 - Find the proper coeficient Kh
Step 2 - Divide the Design pressure by 10 (Pd/10)
Step 3 - Find the proper Table 2/9 value for TT (columns) x Vbh (rows)
Step 4 - Deflection = Kh x (Pd/10) x table 2/9 value
Step 5 - Interpole values if necessary.

Example: TT=124" Pd=50 psf Two Spans Vb1x3 @ 76" (outside) 5040 header

Kh= .2055 (from above tables)
Pd/10= 5
TT x Vbh table = 1.8"
Def. vb = 1.8 x 5 x .2055 = 1.85"

Slat Multiple Span deflection

DEF = Def s + (Def Vb / 2) + (Def h / 4) - Negative direction
DEF = Def s + (Def Vb / 2) - Positive direction

Example: TT=124" Pd=50 psf Two Spans 1x3 @ 88" (inside) 1x3 @ 76" (outside) 5040 header

DEF = .86 + 1.43 / 2 = 1.58" (inwards)
DEF = .86 + .79 / 2 + 1.85 / 4 = 1.72" (outwards)

Design Deflection for Multiple Spans Shutters

Unit #	Pd Pos	Pd Neg	Pd/10 Pos	Pd/10 Neg	TT	# Spans	Slat: Slat Def Table 1/9 In (Ds1)	Slat: Slat Def Table 1/9 Out (Ds2)	Vertical Bar: Vb style In	Vb style Out	Vb height In	Vb height Out	K vb In	K vb Out	Table 2/9 In	Table 2/9 Out	Def Vb In (Dv1)	Def Vb Out (Dv2)	Header: Style	Header: K h	Header: Table 2/9 TTxVbh	Header: Def Header (Dh)	Combine Deflection: In Ds1+Dv1/2	Combine Deflection: Out Ds2+Dv2/2+Dh/4	Allowable Comb. Def: In min (2",TT/30)	Allowable Comb. Def: out TT/30

Note: 1- Manufacturer to provide the information above for each job if multiple span occur.
2- Combine deflection shall be less or equal than the allowable.
3- If more rows are required, include another copy of sheet 9 of 9.
4- Vertical Bar must comply with tables on sheet 6 of 9.
5- Headers must comply with tables on sheet 3 of 9.
6- Slat Span must not exceed Table 1/2 on sheet 2 of 9.
7- All fasteners must be verified in order not to exceed the allowable values set in this approval.
8- A computer print out signed and sealed by the engineer of record can replace this approved sheet.

PRODUCT REVISED
as complying with the Florida Building Code
Acceptance No. 02-0201.01
Expiration Date 5/20/07
By
Miami Dade Product Control Division

EngCo Inc.
CA 8116
6971 W. SUNRISE BLVD
SUITE 104
PLANTATION FL., 33313
Tel.: (954) 585-0304

JAN 25 2002
Pedro De Figueiredo
PE 52609

1200 Series Roll Shutters

JORDAN'S ALUMINUM
116 N. 61ST AVENUE
HOLLYWOOD, FLORIDA, 33024
Tel.: (954) 986-1329
Fax: (954) 986-1349

Date: 12/28/98 | Scale: 1/2"=1" | Designed by: PPMF

Rev. #	Description	Date
1	Review Notes	3/15/99
2	Tranfer Manufacturer NOA	1/23/02

SHEET 9 of 9

Drawing Number 98-02