MIAMI-DADE

BUILDING CODE COMPLIANCE OFFICE (BCCO)
PRODUCT CONTROL DIVISION

MIAMI-DADE COUNTY, FLORIDA
METRO-DADE FLAGLER BUILDING
140 WEST FLAGLER STREET, SUITE 1603
MIAMI, FLORIDA 33130-1563
(305) 375-2901 FAX (305) 375-2908

NOTICE OF ACCEPTANCE (NOA)

Therma-Tru Corporation
108 Mutzfeld Road
Butler, IN 46721

SCOPE:

This NOA is being issued under the applicable rules and regulations governing the use of construction materials. The documentation submitted has been reviewed by Miami-Dade County Product Control Division and accepted by the Board of Rules and Appeals (BORA) to be used in Miami Dade County and other areas where allowed by the Authority Having Jurisdiction (AHJ).

This NOA shall not be valid after the expiration date stated below. The Miami-Dade County Product Control Division (In Miami Dade County) and/or the AHJ (in areas other than Miami Dade County) reserve the right to have this product or material tested for quality assurance purposes. If this product or material fails to perform in the accepted manner, the manufacturer will incur the expense of such testing and the AHJ may immediately revoke, modify, or suspend the use of such product or material within their jurisdiction. BORA reserves the right to revoke this acceptance, if it is determined by Miami-Dade County Product Control Division that this product or material fails to meet the requirements of the applicable building code.

This product is approved as described herein, and has been designed to comply with the High Velocity Hurricane Zone of the Florida Building Code.

DESCRIPTION: Series "Benchmark" 6'8" S/E Inswing Opaque Insulated Steel Door w/Sidelites

APPROVAL DOCUMENT: Drawing No. **S-2192**, dated 12/03/01, with revision 1 dated 04/01/02, titled "Benchmark Steel Edge" Single & Double Inswing 6-8 Opaque Door, sheets 1 through 7, prepared by R. W. Building Consultants, Inc., bearing the Miami-Dade County Product Control Approval stamp with the Notice of Acceptance number and approval date by the Miami-Dade County Product Control Division.

MISSILE IMPACT RATING: Large and Small Missile Impact Resistant for Doors Only

LABELING: Each unit shall bear a permanent label with the manufacturer's name or logo, city, state and following statement: "Miami-Dade County Product Control Approved", unless otherwise noted herein.

RENEWAL of this NOA shall be considered after a renewal application has been filed and there has been no change in the applicable building code negatively affecting the performance of this product.

TERMINATION of this NOA will occur after the expiration date or if there has been a revision or change in the materials, use, and/or manufacture of the product or process. Misuse of this NOA as an endorsement of any product, for sales, advertising or any other purposes shall automatically terminate this NOA. Failure to comply with any section of this NOA shall be cause for termination and removal of NOA.

ADVERTISEMENT: The NOA number preceded by the words Miami-Dade County, Florida, and followed by the expiration date may be displayed in advertising literature. If any portion of the NOA is displayed, then it shall be done in its entirety.

INSPECTION: A copy of this entire NOA shall be provided to the user by the manufacturer or its distributors and shall be available for inspection at the job site at the request of the Building Official.
This NOA consists of this page 1 as well as approval document mentioned above.
The submitted documentation was reviewed by **Manuel Perez, P.E.**

THERMA-TRU®
"BENCHMARK"
STEEL EDGE INSULATED DOOR
6'8 INSWING WITH & WITHOUT SIDELITES

GENERAL NOTES

1. THIS PRODUCT IS DESIGNED TO COMPLY WITH THE FLORIDA BUILDING CODE.
2. WOOD BUCKS BY OTHERS, MUST BE ANCHORED PROPERLY TO TRANSFER LOADS TO THE STRUCTURE.
3. PRODUCT ANCHORS SHALL BE AS LISTED AND SPACED AS SHOWN ON DETAILS. ANCHOR EMBEDMENT TO BASE MATERIAL SHALL BE BEYOND WALL DRESSING OR STUCCO.
4. DESIGNED PRESSURE RATING SEE TABLE PAGE 1.
5. THIS PRODUCT DOES NOT MEET THE WATER REQUIREMENTS FOR "HIGH VELOCITY HURRICANE ZONES"
6. UNIT SHALL BE INSTALLED ONLY AT LOCATIONS PROTECTED BY A CANOPY OR OVERHANG SUCH THAT THE ANGLE BETWEEN THE EDGE OF CANOPY OR OVERHANG TO SILL IS LESS THAN 45 DEGREES. UNLESS UNIT IS INSTALLED IN NON-HABITABLE AREAS WHERE THE UNIT AND THE AREA ARE DESIGNED TO ACCEPT WATER INFILTRATION.
7. WHEN THIS PRODUCT IS USED IN AREAS REQUIRING WINDBORNE DEBRIS PROTECTION FLORIDA BUILDING CODE APPROVED IMPACT RESISTANT SHUTTERS ARE REQUIRED FOR THE SIDELITES ONLY.
8. SIDELITES ARE AN OPTION AND CAN BE USED IN A SINGLE OR DOUBLE CONFIGURATION.

RESIDENTIAL INSULATED STEEL DOOR
(Common to all frame conditions)

Door & Sidelite Leaf Construction:

Face sheets: 25 ga. (0.021") minimum thickness, Galvanized steel A-525 commercial quality – AKDQ per ASTM 620 with yield strength Fy(ave.)=40,561 psi.

Core design: Polyurethane foam core, with 1.9 lbs. density by BASF.

Construction: Flush or embossed type. The vertical edges are extensions of the skin, rolled formed to a mechanical interlock, horizontal edges are welded together at two places each.

Frame Construction: The frame is constructed from finger jointed pine measuring 4.563" wide x 1.25" thick. The header is joined to each side (3) 16ga. 1/2" crown x 2" long staples at both side. The threshold is joined to the side jambs with (3) #10 x 1.5" PPH sheet metal screws at each side. The mullions are secured together in a sidelite application using #10 x 2" long PFH Wood Screws (6) screws per each mullion. The units use an Aluminum saddle type inswing threshold.

Sidelite Glazing: The sidelite panels are sandwich glazed using a two piece lip lite frame. They are dry glazed on the exterior with an 1/8" thk. cellular glazing tape, (Stik-II Tape). with the silicone caulking and secured to the steel panel with #8 X 1.5" Philips Plascrew. The intergral lite was glazed between the steel face sheets with glazing tape and sealed on the exterior with a silicone caulking cap bead.

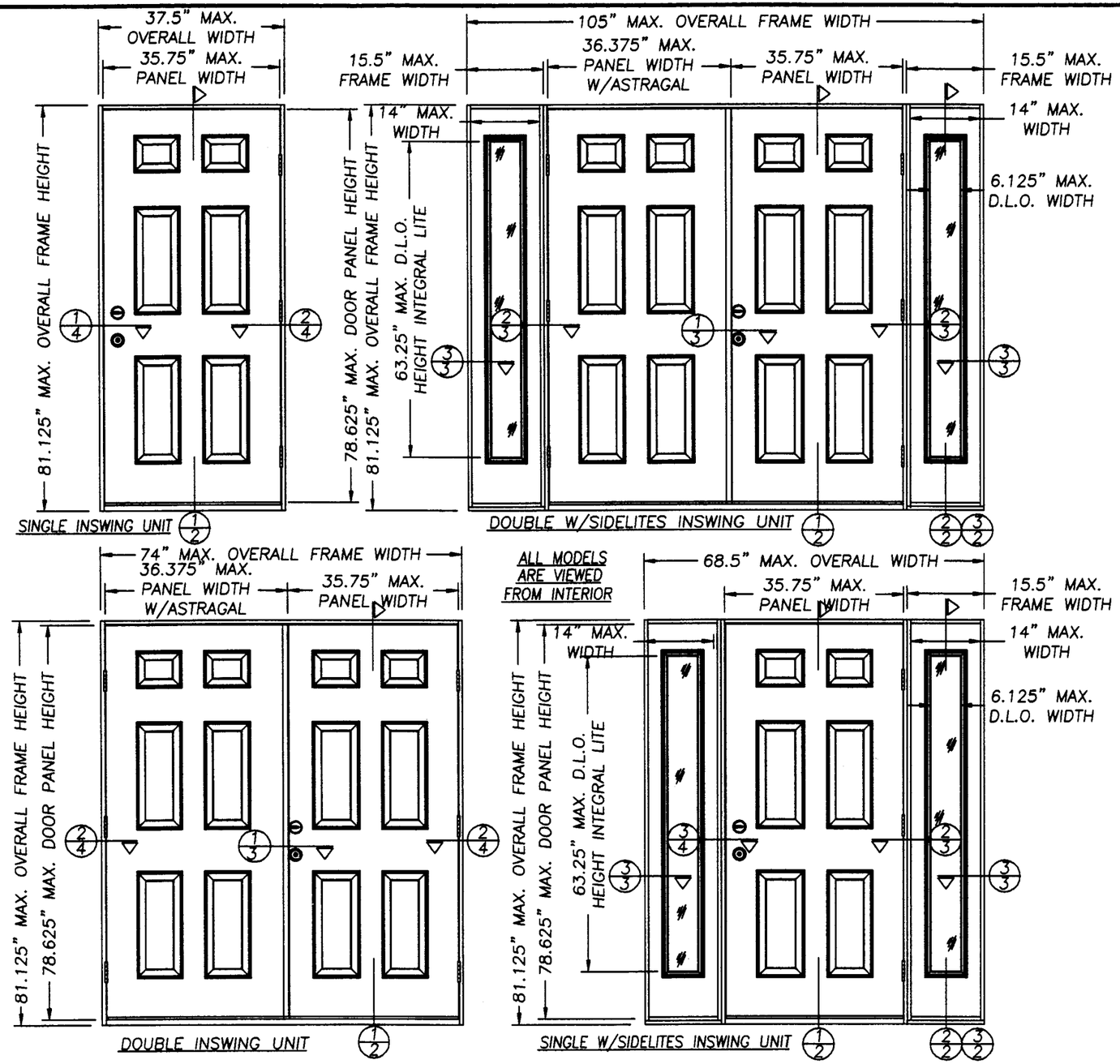

TABLE OF CONTENTS

SHEET #	DESCRIPTION
1	TYPICAL ELEVATIONS & GENERAL NOTES
2	VERTICAL CROSS SECTIONS
3	HORIZONTAL CROSS SECTIONS & NOTES
4	HORIZONTAL CROSS SECTIONS & BILL OF MATERIAL
5	ANCHORING LOCATIONS & DETAILS
6	ANCHORING LOCATIONS & GLAZING DETAIL
7	UNIT COMPONENTS

DESIGN PRESSURE RATING
(WHERE WATER INFILTRATION REQUIREMENT IS NOT NEEDED)

SINGLE	+75.0 PFS	-75.0 PFS
DOUBLE	+65.0 PFS	-65.0 PFS
SINGLE & DOUBLE WITH SIDELITES	+65.0 PFS	-65.0 PFS

Approved as complying with the Florida Buiding Code
Date AUG 8, 2002
NOA# 02-0205.04
Miami Dade Product Control Division
By Manuel Perez

THERMA-TRU CORPORATION
1687 WOODLANDS DRIVE
MAUMEE, OHIO
PH. (800) 537-8827

PRODUCT: "BENCHMARK STEEL EDGE" SINGLE & DOUBLE INSWING 6-8 OPAQUE DOOR

PART OR ASSEMBLY: TYPICAL ELEVATIONS & GENERAL NOTES

REVISIONS

NO.	DATE		BY
1	4/1/02	GENERAL REVISION	WLN

RW BUILDING CONSULTANTS, INC.
813.684.3831

DATE: 12/3/01
SCALE: N.T.S.
DWG. BY: WLN
CHK. BY: RW
DRAWING NO.: S-2192
SHEET 1 OF 7

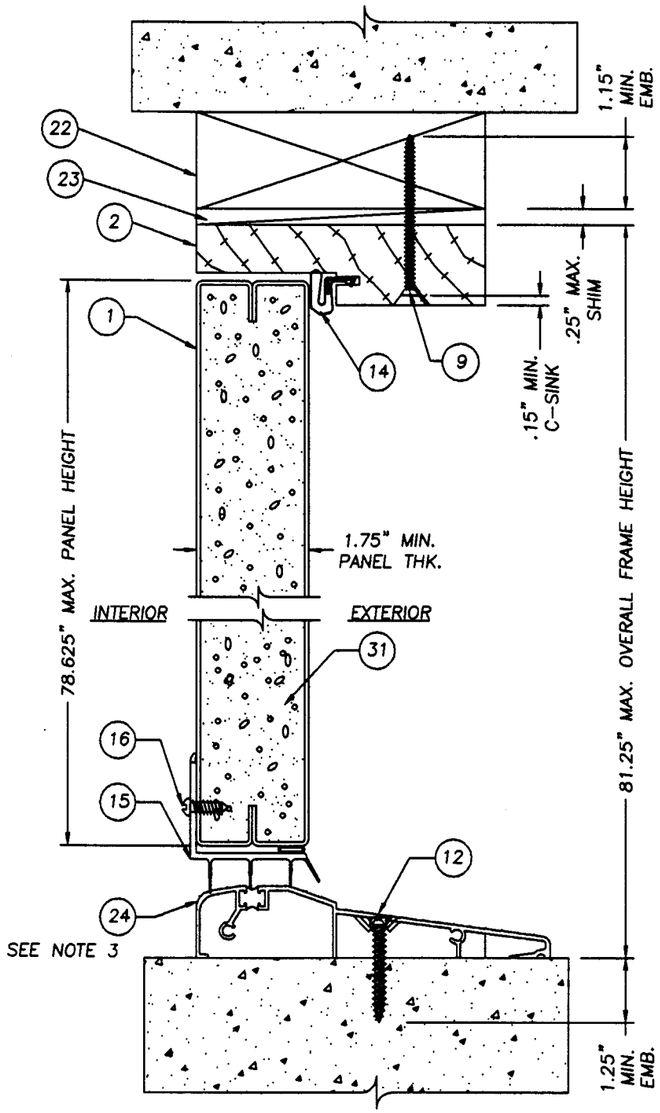

1/2 VERTICAL CROSS SECTION
INSWING UNIT
W/ALUMINUM THRESHOLD

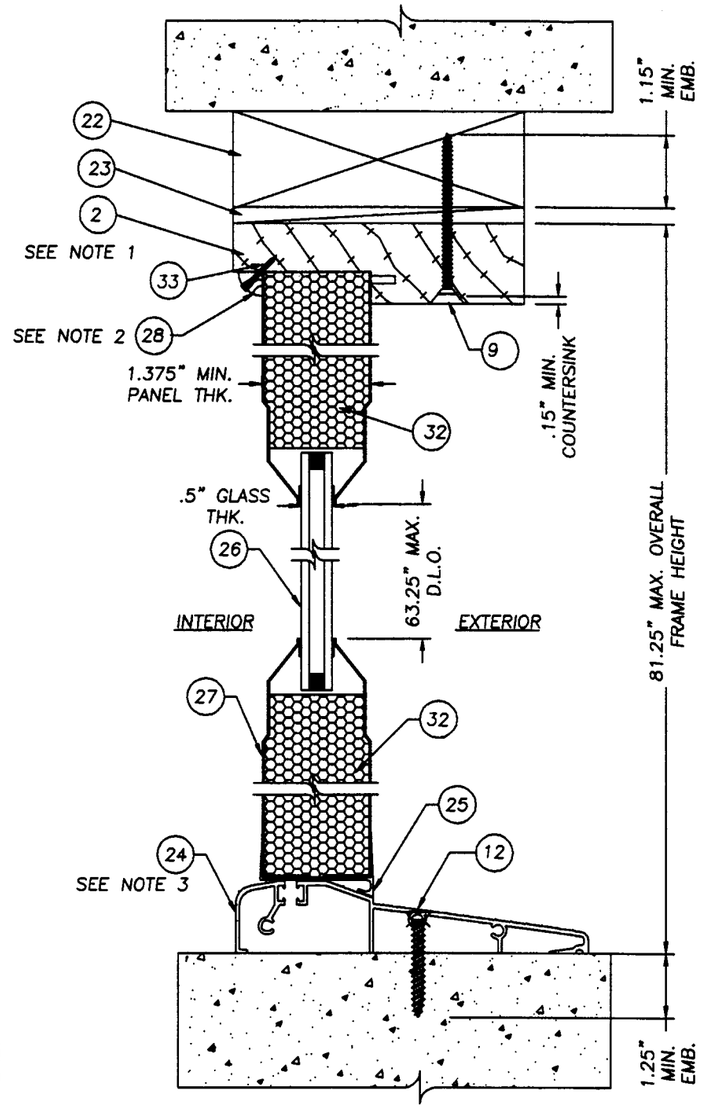

2/2 VERTICAL CROSS-SECTION
INTEGRAL SIDELITE SASH

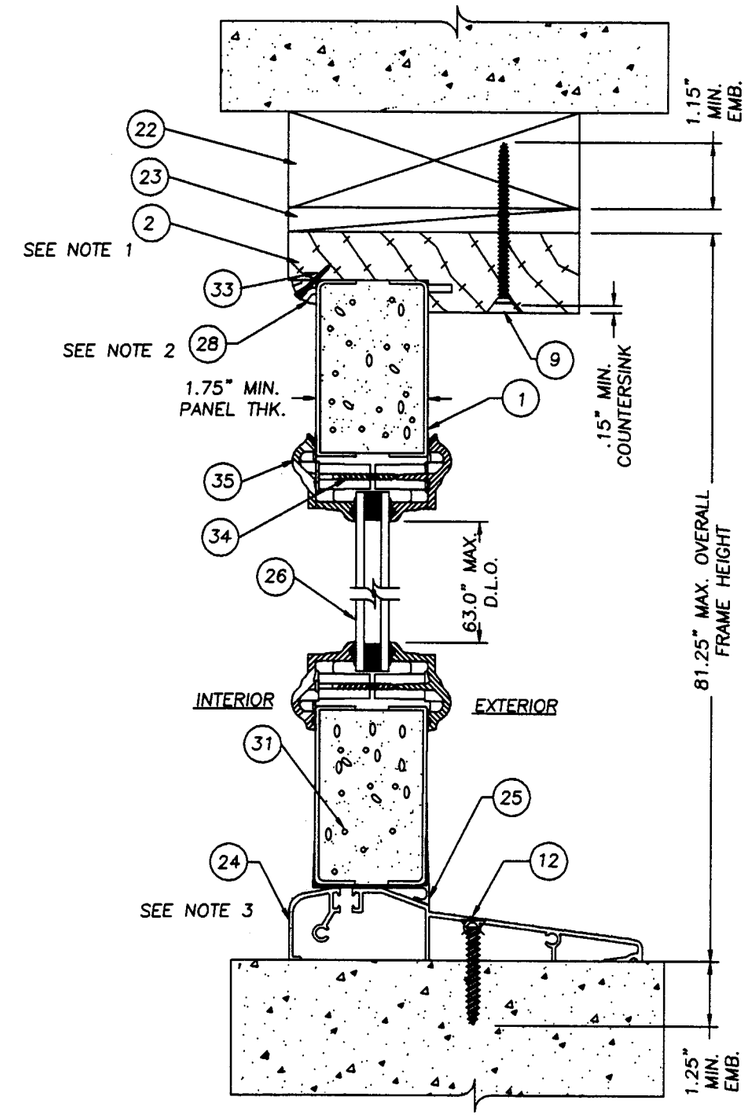

3/2 VERTICAL CROSS-SECTION
LIP LITE SIDELITE SASH

NOTES:

1. THE HEAD JAMB IS ATTACHED TO THE SIDE JAMBS WITH (3) 16GA. x 1/2" CROWN x 2" STAPLES AT BOTH SIDE.
2. THE SIDELITES ARE STOPPED IN WITH 0.375" QUARTER ROUND USING 16 GA. 1.0" WIRE BRADS AT 2.0" FROM EACH CORNER AND A MAXIMIMUM 6.0" ON CENTER.
3. THE INSWING ALUMINUM THRESHOLD IS ATTACHED TO THE SIDE JAMBS WITH (3) # 10 X 1.5" PPH SHEET METAL SCREWS AT EACH END.

Approved as complying with the Florida Buiding Code
Date AUG. 8, 2002
NOA# 02-0205.04
Miami Dade Product Control Division
By Manuel Perez

THERMA-TRU CORPORATION
1687 WOODLANDS DRIVE
MAUMEE, OHIO
PH. (800) 537-8827

PRODUCT: "BENCHMARK STEEL EDGE" SINGLE & DOUBLE INSWING 6'8 OPAQUE DOOR

PART OR ASSEMBLY: VERTICAL CROSS SECTIONS

NO.	DATE	GENERAL REVISION	BY
1	4/1/02		WLN

REVISIONS

RW BUILDING CONSULTANTS, INC.
813.684.3831

DATE: 12/3/01
SCALE: NTS
DWG. BY: WLN
CHK. BY: RW
DRAWING NO.: S-2192
SHEET 2 OF 7

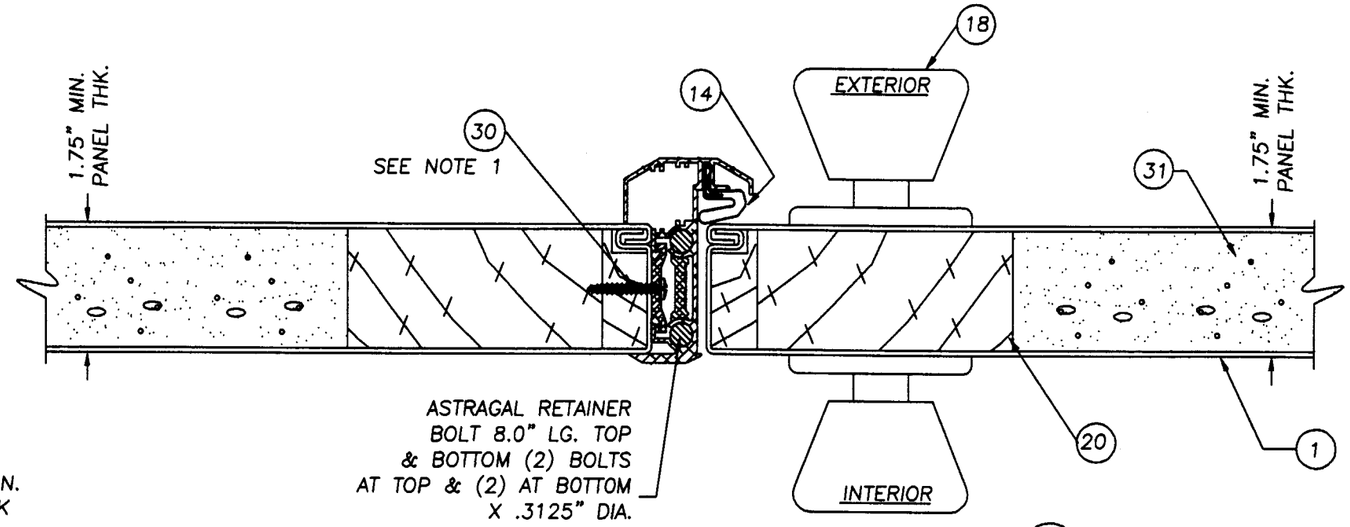

1/3 HORIZONTAL CROSS SECTION
LATCH JAMB TO BUCK

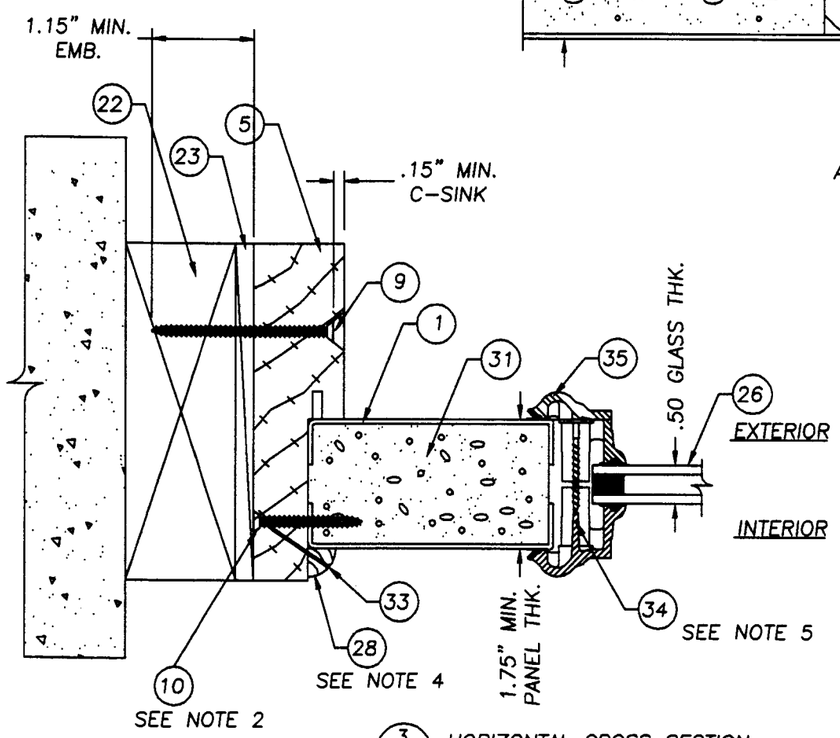

3/3 HORIZONTAL CROSS SECTION
@ SIDELITE TO BUCK
(SHOWN WITH LIP LITE)

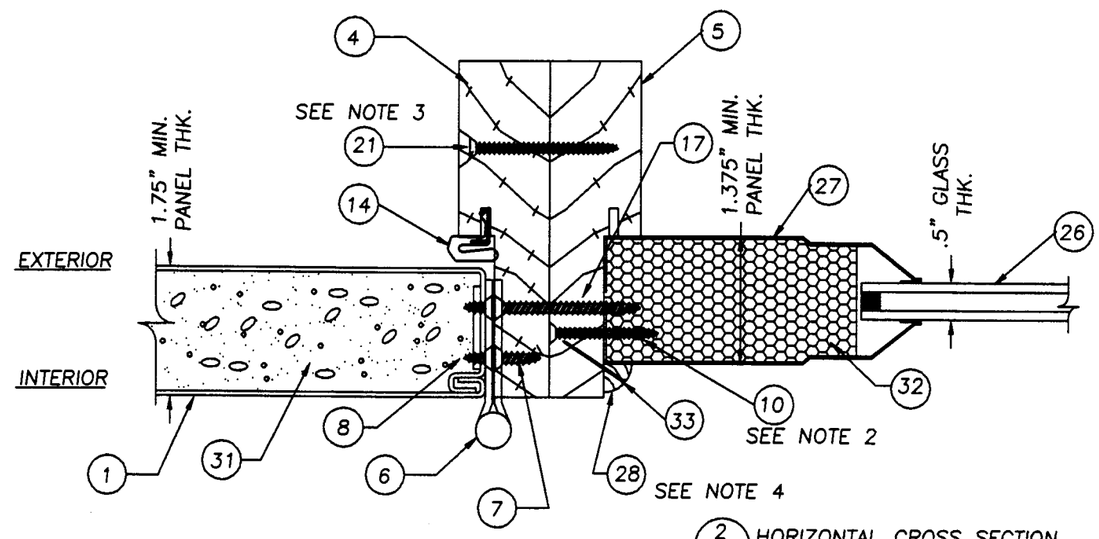

2/3 HORIZONTAL CROSS SECTION
HINGE JAMB TO BUCK, TYP.
(SHOWN WITH INTEGRAL LITE)

NOTES:

1. SPACING FOR THE (9) #8 x 1" PANHEAD SMS ATTACHING THE ASTRAGAL TO THE INACTIVE DOOR IS AS FOLLOWS: TOP DOWN AT 1.0", 3.0", 5.0", 17.75", 43.0", 58.875", 73.875", 75.875" AND 77.875".
2. THE SIDELITE PANELS ARE DIRECT SET INTO THE JAMBS WITH (4) #8 X 1.5" PFH WS LOCATED AT 6.0", 28.5", 51.0" AND 73.5" FROM THE TOP ON EACH VERTICAL JAMB.
3. THE SIDELITE JAMBS ARE ATTACHED TO THE DOOR JAMB WITH (6) #8 X 2.0" PFH WS LOCATED AT EACH SIDE AT 6.0", 19.625", 33.25", 46.875", 60.5" AND 74.0" FROM THE TOP OF THE HEAD JAMB THROUGH THE DOORSTOP INTO THE SIDELITE JAMB.
4. THE SIDELITES ARE STOPPED IN WITH 0.375" QUARTER ROUND USING 16 GA. 1.0" WIRE BRADS AT 2.0" FROM EACH CORNER AND A MAXIMUMUM 6.0" ON CENTER.
5. SPACING FOR THE (16) #8 x 1.5 PHILIPS PLASCREW: AT TOP & BOTTOM AT 2.375" FROM EACH CORNER VERTICAL: 3.25" FROM EACH END AND 4 EQUALLY SPACED.

Approved as complying with the Florida Buiding Code
Date AUG. 8, 2002
NOA# 02-0205.04
Miami Dade Product Control Division
By [signature]

THERMA-TRU CORPORATION
1687 WOODLANDS DRIVE
MAUMEE, OHIO
PH. (800) 537-8827

PRODUCT: "BENCHMARK STEEL EDGE" SINGLE & DOUBLE INSWING 6'8 OPAQUE DOOR

PART OR ASSEMBLY: HORIZONTAL CROSS SECTION & NOTES

NO.	DATE	REVISIONS	BY
1	4/1/02	GENERAL REVISION	WLN

RW BUILDING CONSULTANTS, INC.
813.684.3831

DATE: 12/3/01
SCALE: NTS
DWG. BY: WLN
CHK. BY: RW
DRAWING NO.: S-2192
SHEET 3 OF 7

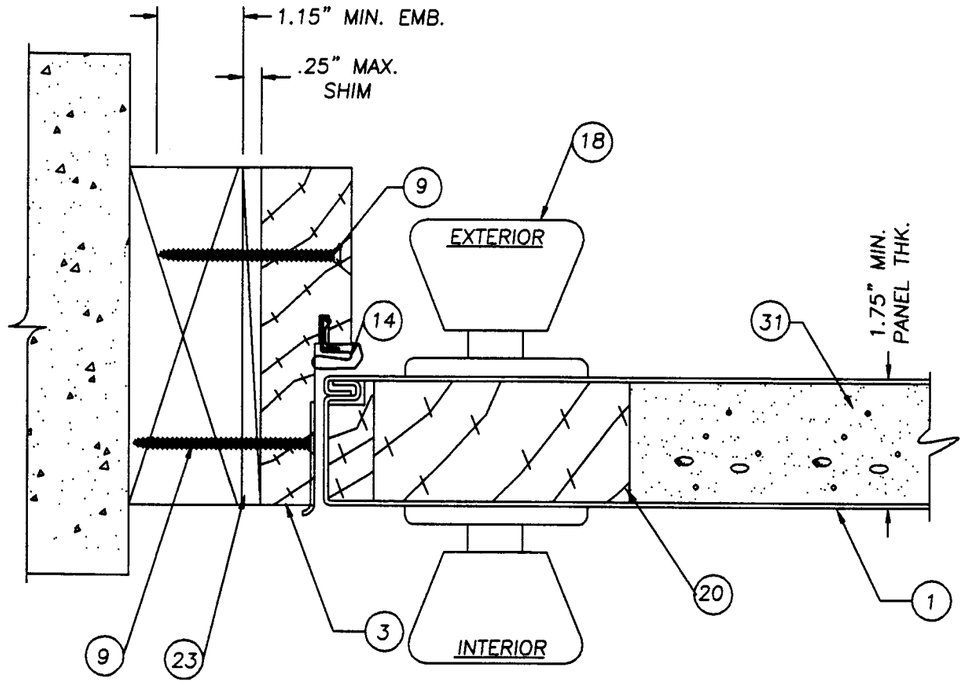

1/4 HORIZONTAL CROSS SECTION
LATCH JAMB TO BUCK

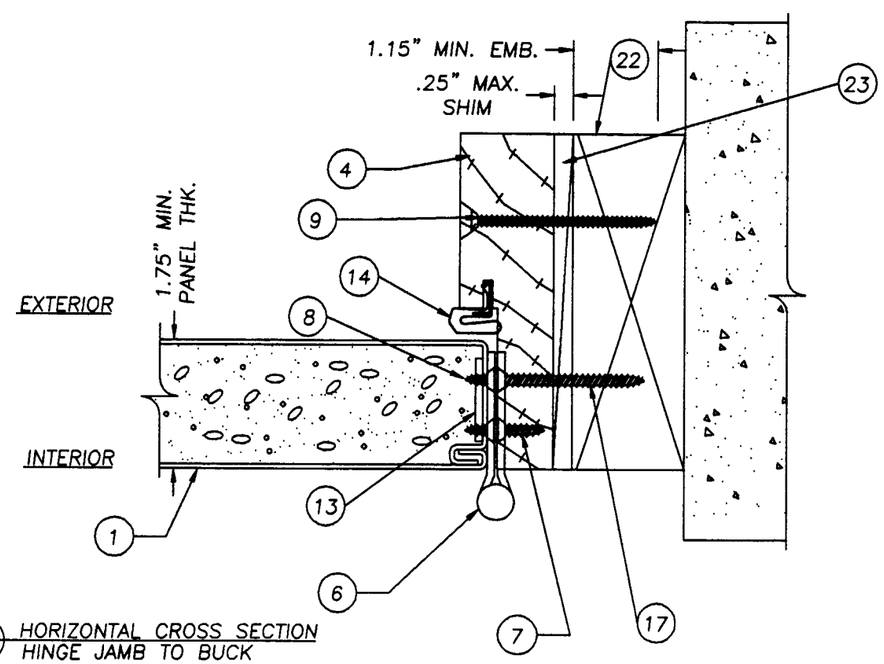

2/4 HORIZONTAL CROSS SECTION
HINGE JAMB TO BUCK

Item	DESCRIPTION	Material
1	DOOR PANEL STEEL FACE SHEETS (.021" MIN. THK.fy= 40,561 psi)	STEEL
2	4 9/16" HEADER	WOOD
3	4 9/16" LATCH JAMB	WOOD
4	4 9/16" HINGE JAMB	WOOD
5	4 9/16" BLANK JAMB	
6	4" x 4" RADIUS HINGE PROPRIETARY .097" THK.	STEEL
7	#10 x 3/4" LG. (Hinge to Frame)	STEEL
8	#10 x 1/4" LG. (Hinge to Door)	STEEL
9	#8 x 2 1/2" LG. WOOD SCREW	STEEL
10	#8 X 1 1/2" PFH WS	STEEL
11	#8 x 2 1/2" PFH WS	STEEL
12	3/16" TAPCON ANCHOR (ELCO)	STEEL
13	HINGE REINFORCEMENT PLATE 1.125" WIDE x 5.25" LONG x 0.050" THICK	STEEL
14	COMPRESSION WEALTHERSTRIP (Therma-Tru)	
15	THERMA-TRU ADJUSTABLE SWEEP	VINYL
16	#8 x 1/2" LG. TYPE "AB" PANHEAD	STEEL
17	#10 WOOD SCREW X 2" LG.	STEEL
18	KWIKSET 700 DL PASSAGE	
19	KWIKSET 700 DEADBOLT	
20	LATCH & DEADBOLT WOODBLOCK (3.0" x 3.5") W/CROSS BORE WOOD BLOCK	WOOD
21	#8 x 2" PFH WS	STEEL
22	2x WOOD SUB BUCK	WOOD
23	MAX. 1/4" SHIM MATERIAL	WOOD
24	ONE PIECE THRESHOLD	ALUMINUM
25	SIDELITE BOTTOM SEAL	VINYL
26	GLAZING, 1/2" INSULATED TEMPERED GLASS	GLASS
27	SIDELITE PANEL STEEL FACE SHEETS (.021" MIN. THK.fy= 40,561 psi)	STEEL
28	3/8" x 3/8" QUARTER ROUND FINGER JOINTED PINE	WOOD
29	ASTRAGAL WINDJAMBER II (.052" WALL)	ALUMINUM
30	#8 x 1" LG. PANHEAD STEEL METAL SCREW	STEEL
31	BASF URETHANE CORE	FOAM
32	POLYSTYRENE CORE	
33	1" LONG X .040" DIA. BRAD TRIM NAIL	STEEL
34	#8 1 1/2" PHILIPS PLASCREW (LITE FRAME)	STEEL
35	LIP LITE FRAME .5 GLASS BY O.D.L. (HP POLYPROPYLENE THERMOFIL-P6-30FM0391)	POLYPROP.

THERMA-TRU CORPORATION
1687 WOODLANDS DRIVE
MAUMEE, OHIO
PH. (800) 537-8827

PRODUCT: "BENCHMARK STEEL EDGE" SINGLE & DOUBLE INSWING 6'8 OPAQUE DOOR

PART OR ASSEMBLY: HORIZONTAL CROSS SECTION & BILL OF MATERIAL

NO.	DATE	GENERAL REVISION	BY
1	4/1/02		WLN

REVISIONS

RW BUILDING CONSULTANTS, INC.
813.684.3831

Approved as complying with the Florida Buiding Code
Date AUG. 8, 2002
NOA# 02-0205.04
Miami Dade Product Control Division
By Manuel Perez

DATE: 12/3/01
SCALE: NTS
DWG. BY: WLN
CHK. BY: RW
DRAWING NO.: S-2192
SHEET 4 OF 7

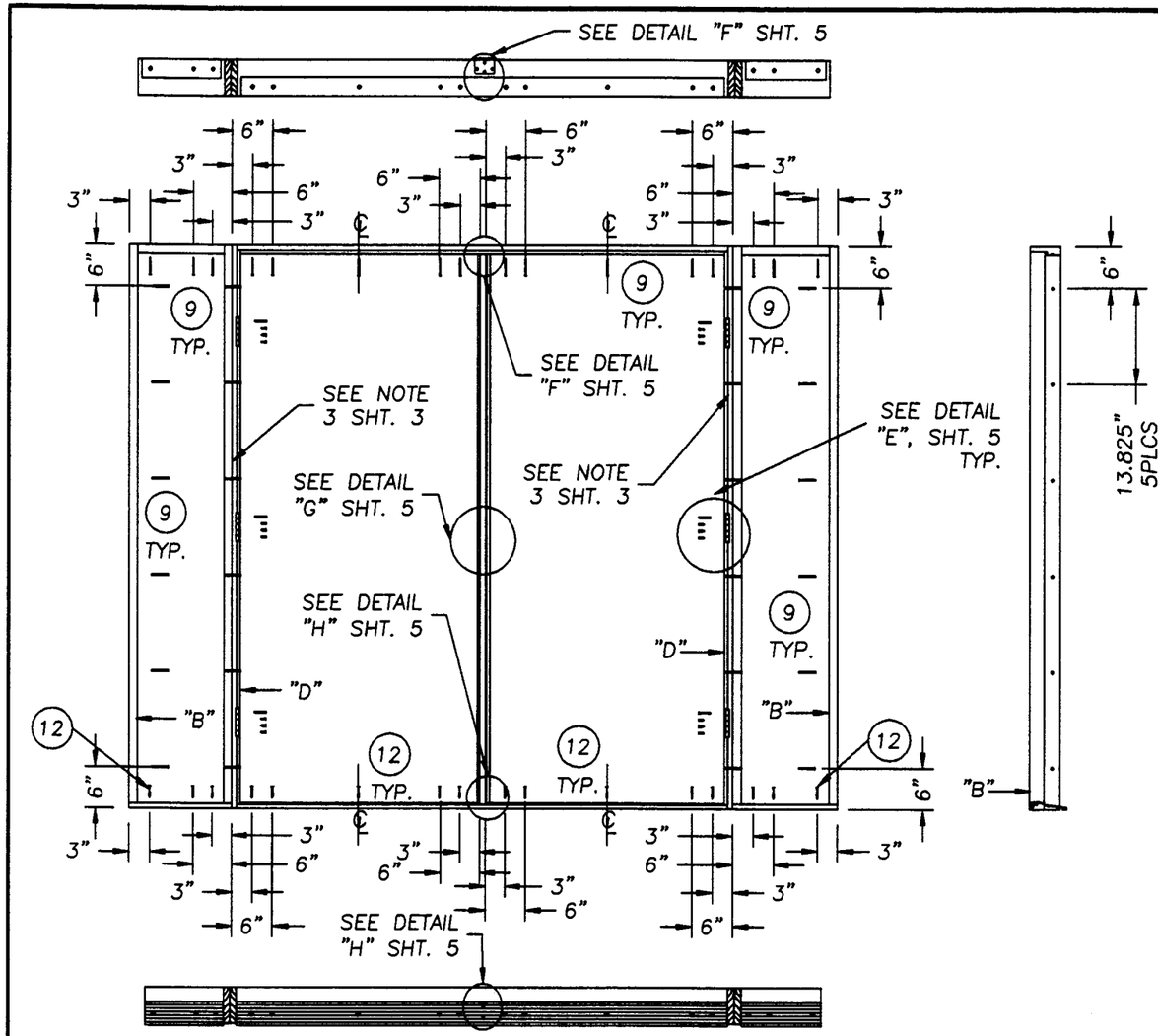

DOUBLE DOOR W/SIDELITES

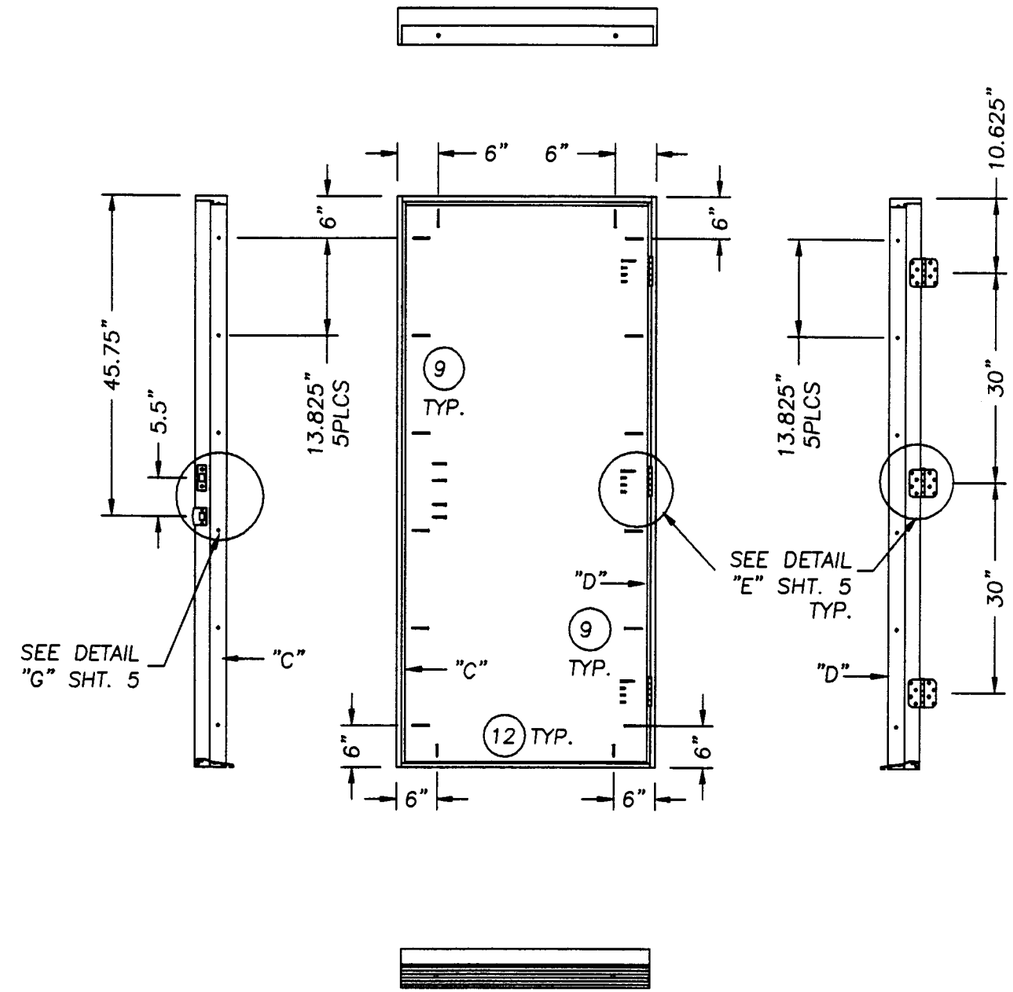

SINGLE DOOR

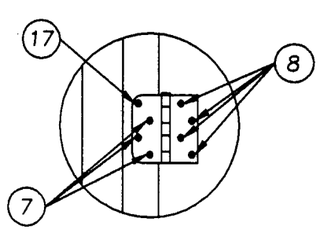

DETAIL "E"

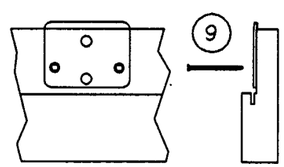

DETAIL "F"

ATTACH ASTRAGAL THROW BOLT STRIKE PLATE TO FRAME AS SHOWN AT HEADER.

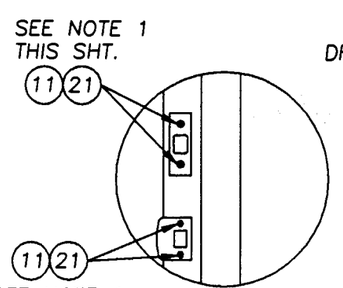

DETAIL "G"

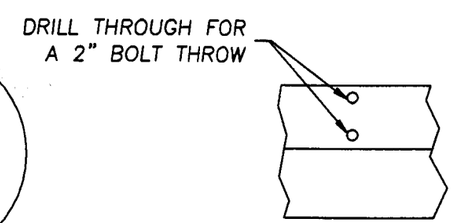

DETAIL "H"

ASTRAGAL THROW BOLTS AT THE THRESHOLD

NOTE 1:
USE #8 x 2 1/2" PFH WOOD SCREW TO ATTACH THE STRIKE AND DEADBOLT PLATES TO THE JAMB OR ASTRAGAL EXCEPT IN THE MULLED APPLICATION WITH THE SIDELITE USE #8 x 2" PFH WOOD SCREW.

Approved as complying with the Florida Building Code
Date AUG. 8, 2002
NOA# 02-0205.04
Miami Dade Product Control Division
By

THERMA-TRU CORPORATION
1687 WOODLANDS DRIVE
MAUMEE, OHIO
PH. (800) 537-8827

PRODUCT: "BENCHMARK STEEL EDGE" SINGLE & DOUBLE INSWING 6'8 OPAQUE DOOR

PART OR ASSEMBLY: ANCHORING LOCATIONS & DETAILS

NO.	DATE	REVISIONS	BY
1	4/1/02	GENERAL REVISION	WLN

RW BUILDING CONSULTANTS, INC.
813.684.3831

DATE: 12/3/01
SCALE: N.T.S.
DWG. BY: WLN
CHK. BY: RW
DRAWING NO.: S-2192
SHEET 5 OF 7

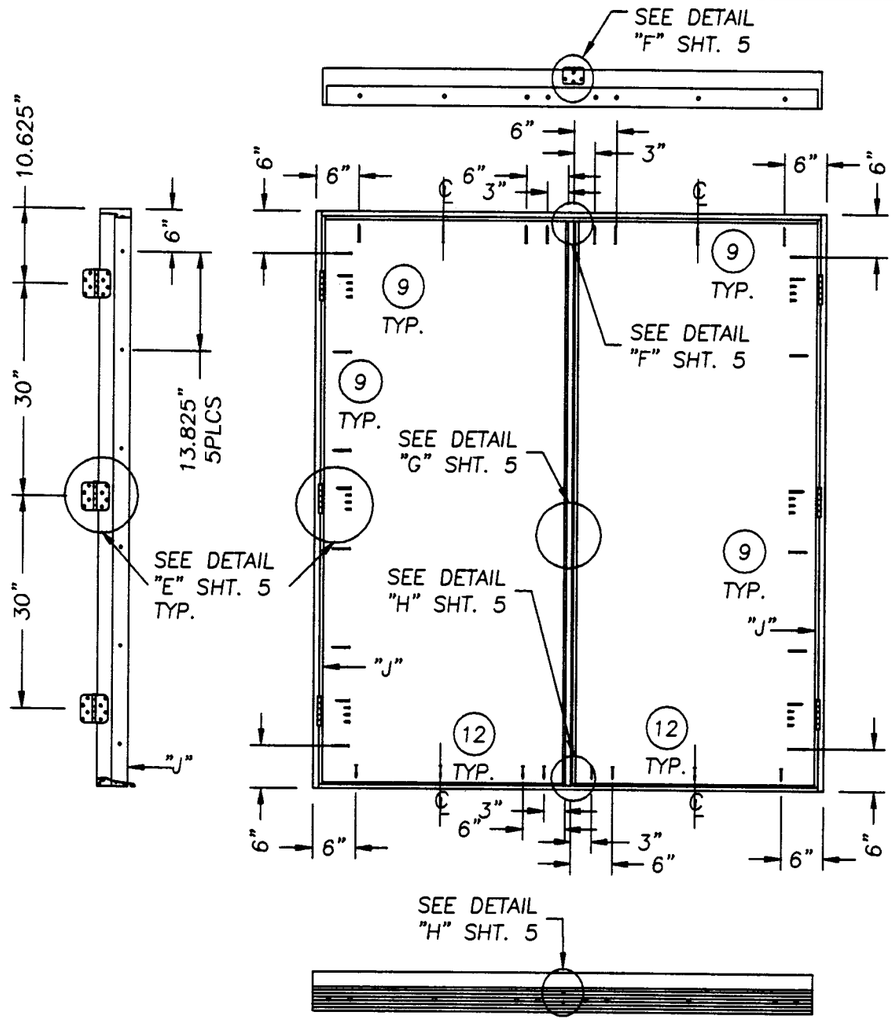

DOUBLE DOOR

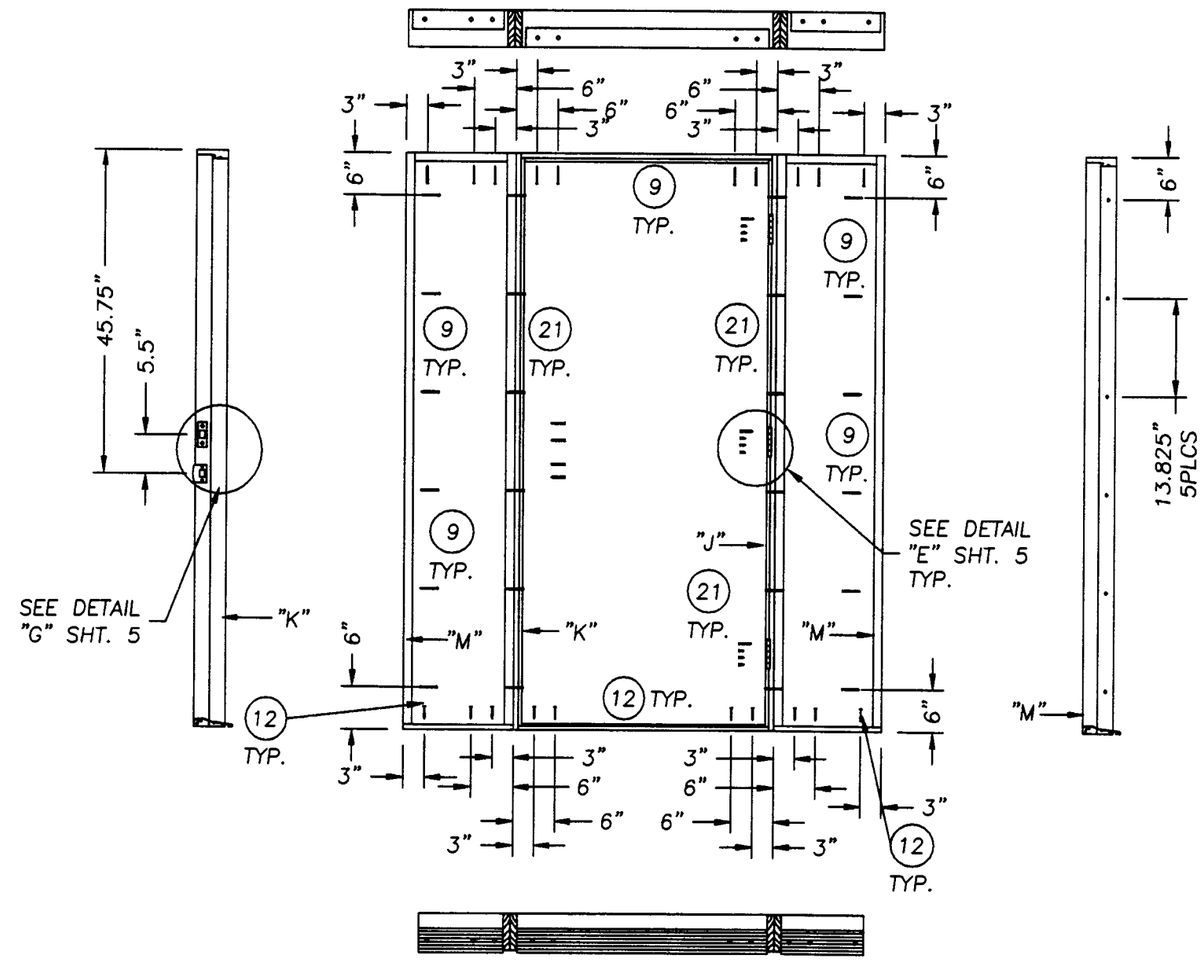

SINGLE DOOR W/SIDELITES

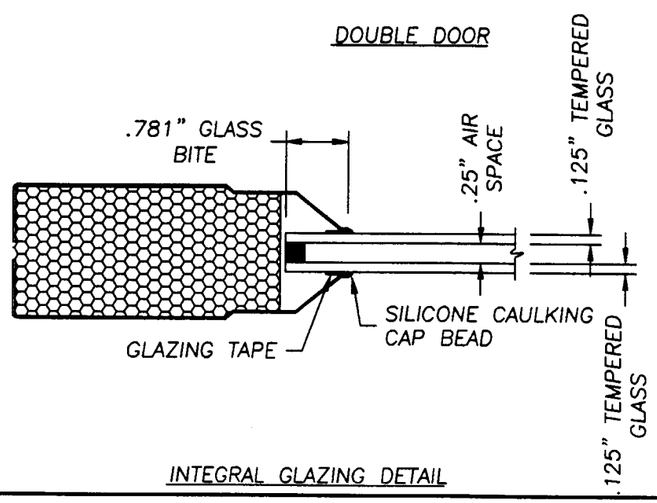

INTEGRAL GLAZING DETAIL

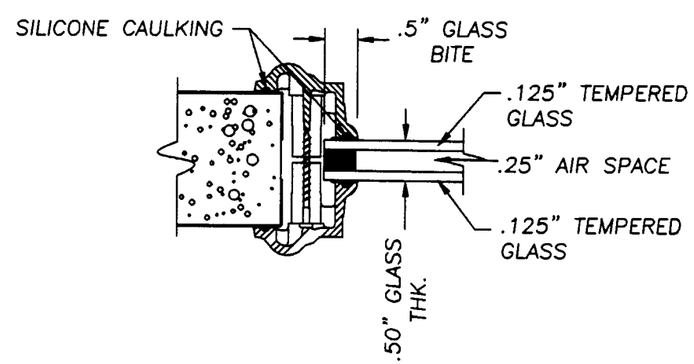

O.D.L. 1/2" GLASS GLAZING DETAIL

Approved as complying with the Florida Buiding Code
Date AUG. 8, 2002
NOA# 02-0205.04
Miami Dade Product Control Division
By Manuel Perez

THERMA-TRU CORPORATION
1687 WOODLANDS DRIVE
MAUMEE, OHIO
PH. (800) 537-8827

PRODUCT: "BENCHMARK STEEL EDGE" SINGLE & DOUBLE INSWING 6'8 OPAQUE DOOR

PART OR ASSEMBLY: ANCHORING LOCATIONS & GLAZING DETAIL

NO.	DATE	GENERAL REVISION	BY
1	4/1/02		WLN

REVISIONS

RW BUILDING CONSULTANTS, INC.
813.684.3831

DATE: 12/3/01
SCALE: N.T.S.
DWG. BY: WLN
CHK. BY: RW
DRAWING NO.: S-2192
SHEET 6 OF 7

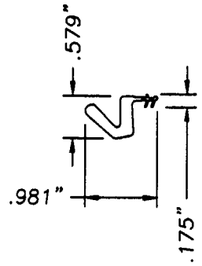

(14) COMPRESSION WEATHERSTRIP
BY THERMA-TRU
FOAM CELL CORE
W/VINYL JACKET

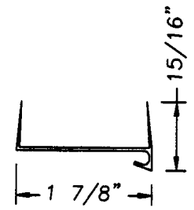

(25) VINYLE SIDELITE BOTTOM SEAL

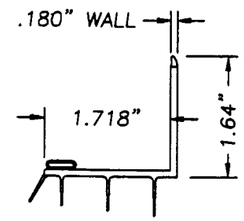

(15) VINYL ADJUSTABLE SWEEP

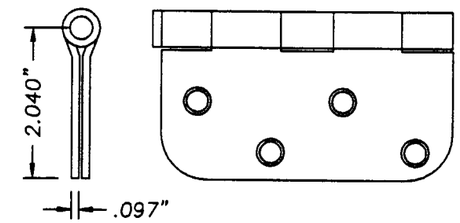

(6) 4 x 4 RADIUS HINGE

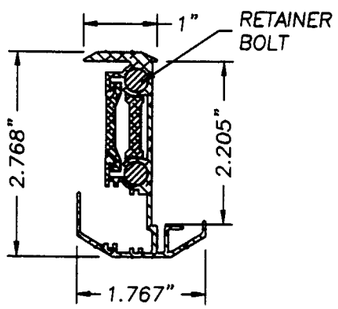

(29) WINDJAMBER II WR80T
ASTRAGAL (ALUMINUM .052" WALL TYP.)
(6060 T6)

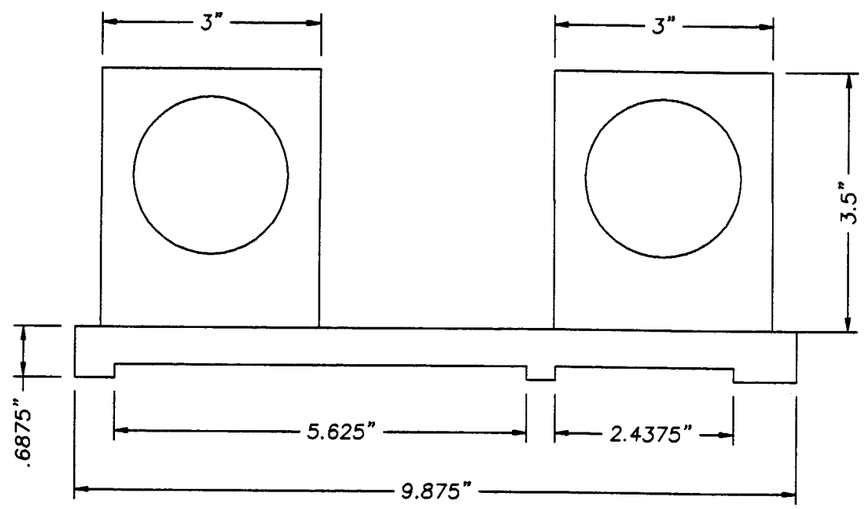

(20) LATCH & DEADBOLT
WOOD BLOCK W/
CROSS BORE WOOD BLOCK

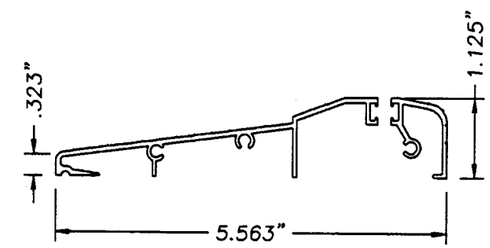

(24) INSWING ALUMINUM THRESHOLD
MATERIAL: ALUMINUM .055" WALL THK.

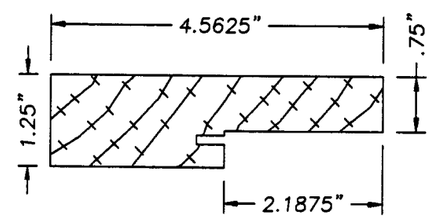

(2)(3)(4)(5) 4 9/16" WOOD FRAME

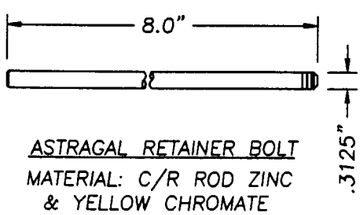

ASTRAGAL RETAINER BOLT
MATERIAL: C/R ROD ZINC
& YELLOW CHROMATE

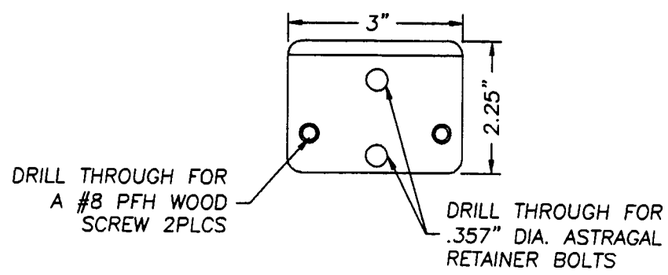

WINDJAMBER II WR68T STRIKE PLATE

THERMA-TRU CORPORATION
1687 WOODLANDS DRIVE
MAUMEE, OHIO
PH. (800) 537-8827

PRODUCT: "BENCHMARK STEEL EDGE" SINGLE & DOUBLE INSWING 6'8 OPAQUE DOOR

PART OR ASSEMBLY: UNIT COMPONENTS

NO.	DATE	REVISIONS	BY
1	4/1/02	GENERAL REVISION	WLN

RW BUILDING CONSULTANTS, INC.
813.684.3831

Approved as complying with the Florida Buiding Code
Date AUG. 8, 2002
NOA# 02-0205.04
Miami Dade Product Control Division
By Manuel Perez

DATE: 12/3/01
SCALE: NTS
DWG. BY: WLN
CHK. BY: RW
DRAWING NO.: S-2192
SHEET 7 OF 7