MIAMI-DADE

BUILDING CODE COMPLIANCE OFFICE (BCCO)
PRODUCT CONTROL DIVISION

MIAMI-DADE COUNTY, FLORIDA
METRO-DADE FLAGLER BUILDING
140 WEST FLAGLER STREET, SUITE 1603
MIAMI, FLORIDA 33130-1563
(305) 375-2901 FAX (305) 375-2908

NOTICE OF ACCEPTANCE (NOA)

Weather Shield MFG., Inc.
One Weather Plaza
Medford, WI 54451

SCOPE:
This NOA is being issued under the applicable rules and regulations governing the use of construction materials. The documentation submitted has been reviewed by Miami-Dade County Product Control Division and accepted by the Board of Rules and Appeals (BORA) to be used in Miami Dade County and other areas where allowed by the Authority Having Jurisdiction (AHJ).

This NOA shall not be valid after the expiration date stated below. The Miami-Dade County Product Control Division (In Miami Dade County) and/or the AHJ (in areas other than Miami Dade County) reserve the right to have this product or material tested for quality assurance purposes. If this product or material fails to perform in the accepted manner, the manufacturer will incur the expense of such testing and the AHJ may immediately revoke, modify, or suspend the use of such product or material within their jurisdiction. BORA reserves the right to revoke this acceptance, if it is determined by Miami-Dade County Product Control Division that this product or material fails to meet the requirements of the applicable building code.

This product is approved as described herein, and has been designed to comply with the High Velocity Hurricane Zone of the Florida Building Code.

DESCRIPTION: Series "Contempra TFT" Picture Aluminum Clad Wood Fixed Window

APPROVAL DOCUMENT: Drawing No. W98-69, titled " 'Contempra' TFT Fixed Casement Windows", sheets 1 through 5, prepared, signed and sealed by Al Farooq, P.E., dated 3/19/99, bearing the Miami-Dade County Product Control Renewal stamp with the Notice of Acceptance number and expiration date by the Miami-Dade County Product Control Division.

MISSILE IMPACT RATING: Large and Small Missile Impact

LABELING: Each unit shall bear a permanent label with the manufacturer's name or logo, city, state and following statement: "Miami-Dade County Product Control Approved", unless otherwise noted herein.

RENEWAL of this NOA shall be considered after a renewal application has been filed and there has been no change in the applicable building code negatively affecting the performance of this product.

TERMINATION of this NOA will occur after the expiration date or if there has been a revision or change in the materials, use, and/or manufacture of the product or process. Misuse of this NOA as an endorsement of any product, for sales, advertising or any other purposes shall automatically terminate this NOA. Failure to comply with any section of this NOA shall be cause for termination and removal of NOA.

ADVERTISEMENT: The NOA number preceded by the words Miami-Dade County, Florida, and followed by the expiration date may be displayed in advertising literature. If any portion of the NOA is displayed, then it shall be done in its entirety.

INSPECTION: A copy of this entire NOA shall be provided to the user by the manufacturer or its distributors and shall be available for inspection at the job site at the request of the Building Official.

This NOA **renews NOA # 98-1110.09** and, consists of this page 1 as well as approval document mentioned above. The submitted documentation was reviewed by **Raul Rodriguez.**

PRODUCT CONTROL ACCEPTED

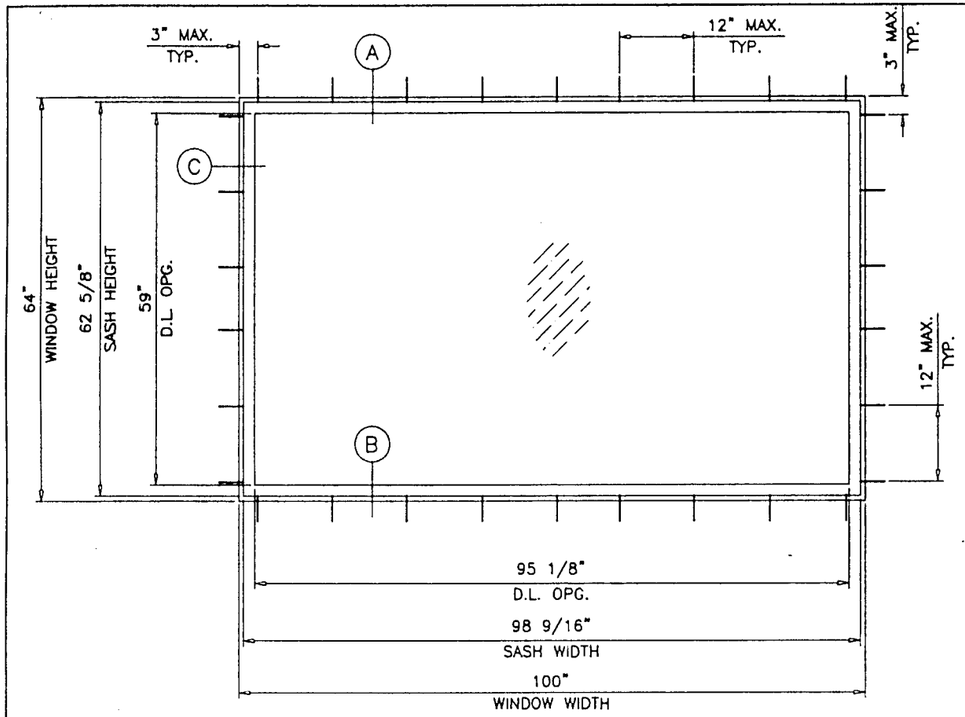

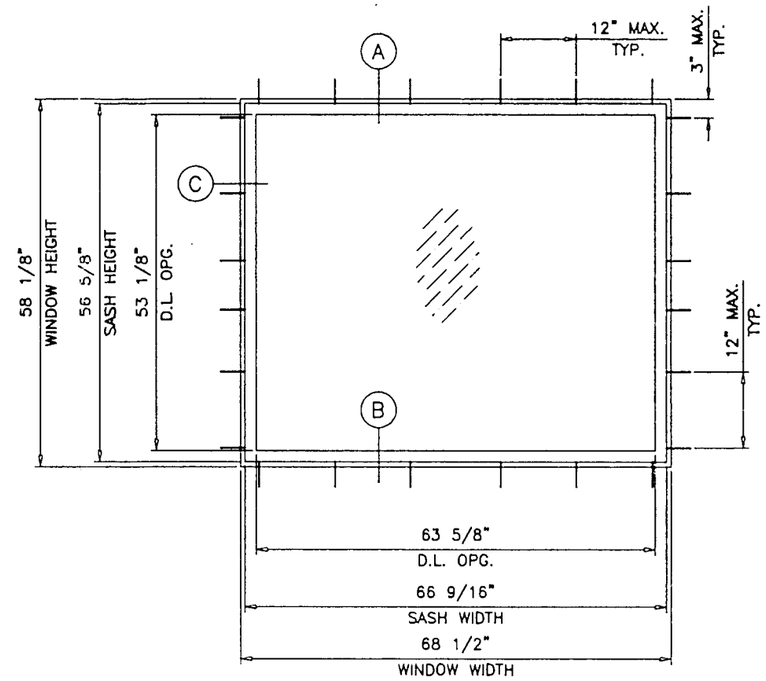

TYPICAL ELEVATIONS
TESTED UNITS

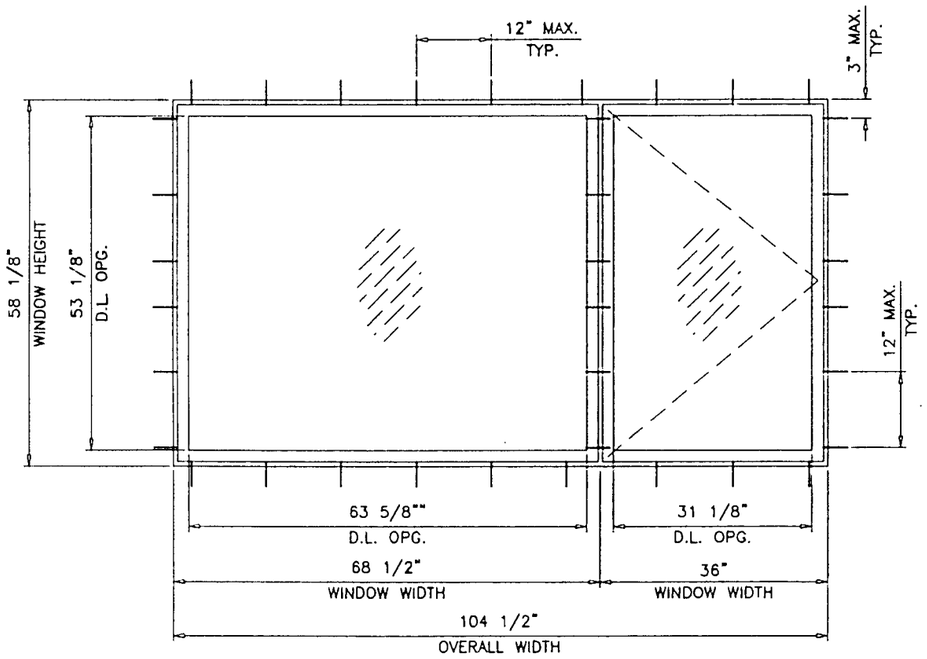

FOR SIDE BY SIDE MULLION AND MULLION ANCHOR CAPACITY SEE 'WEATHER SHIELD' SEPARATE N.O.A.

'CONTEMPRA' TFT ALUMINUM CLAD WOOD FIXED CASEMENT WINDOWS

IMPACT RESISTANT WINDOWS
SHUTTERS NOT REQUIRED

NOTES

1. THIS STRUCTURE IS DESIGNED AS PER THE SOUTH FLORIDA BUILDING CODE 1994 EDITION FOR DADE COUNTY. ALSO FOR WIND LOADS AS PER ASCE 7-88 USING CORRESPONDING LOADS.
2. WOOD BUCKS BY OTHERS, MUST BE ANCHORED PROPERLY TO TRANSFER LOADS TO THE STRUCTURE.
3. ANCHORS SHALL BE AS LISTED, SPACED AS SHOWN ON DETAILS. ANCHOR EMBEDMENT TO BASE MATERIAL SHALL BE BEYOND WALL DRESSING OR STUCCO.
4. ANCHORING OR LOADING CONDITION NOT SHOWN IN THESE DETAILS ARE NOT PART OF THIS APPROVAL.

APPROVED AS COMPLYING WITH THE SOUTH FLORIDA BUILDING CODE
DATE APRIL 15 1999
BY [signature]
PRODUCT CONTROL DIVISION
BUILDING CODE COMPLIANCE OFFICE
ACCEPTANCE NO. 98-1110.09

Engr: DR. HUMAYOUN FAROOQ
STRUCTURES
FLA. PE # 16557
APR 19 1999

PRODUCT RENEWED
ACCEPTANCE No. 02-0205.05
EXPIRATION DATE April 15, 2007
By [signature]
PRODUCT CONTROL DIVISION
BUILDING CODE COMPLIANCE OFFICE

AL-FAROOQ CORPORATION
ENGINEERS, PLANNERS & PRODUCT DESIGN
1235 SW 87 AVE
MIAMI, FLORIDA 33174
TEL. (305) 264-8100 FAX. (305) 262-6978

COMP-ANL\W98-69WS

'CONTEMPRA' TFT FIXED CASEMENT WINDOWS

WEATHER SHIELD WINDOWS & DOORS
MEDFORD, WISCONSIN. 54451
TEL. (715) 748-2100 FAX (715) 748-6064

revisions:

no	date	by	description
A	03.19.99		CORNER ANCHORS REV. NOA ADDED

date: 10-03-98
scale: 1/2"=1'-0"
dr. by: HAMID
chk. by:

drawing no. W98-69

sheet 1 of 5

WOOD BUCKS NOT BY WEATHER SHIELD, MUST SUSTAIN LOADS IMPOSED BY GLAZING SYSTEM AND TRANSFER THEM TO THE BUILDING STRUCTURE.

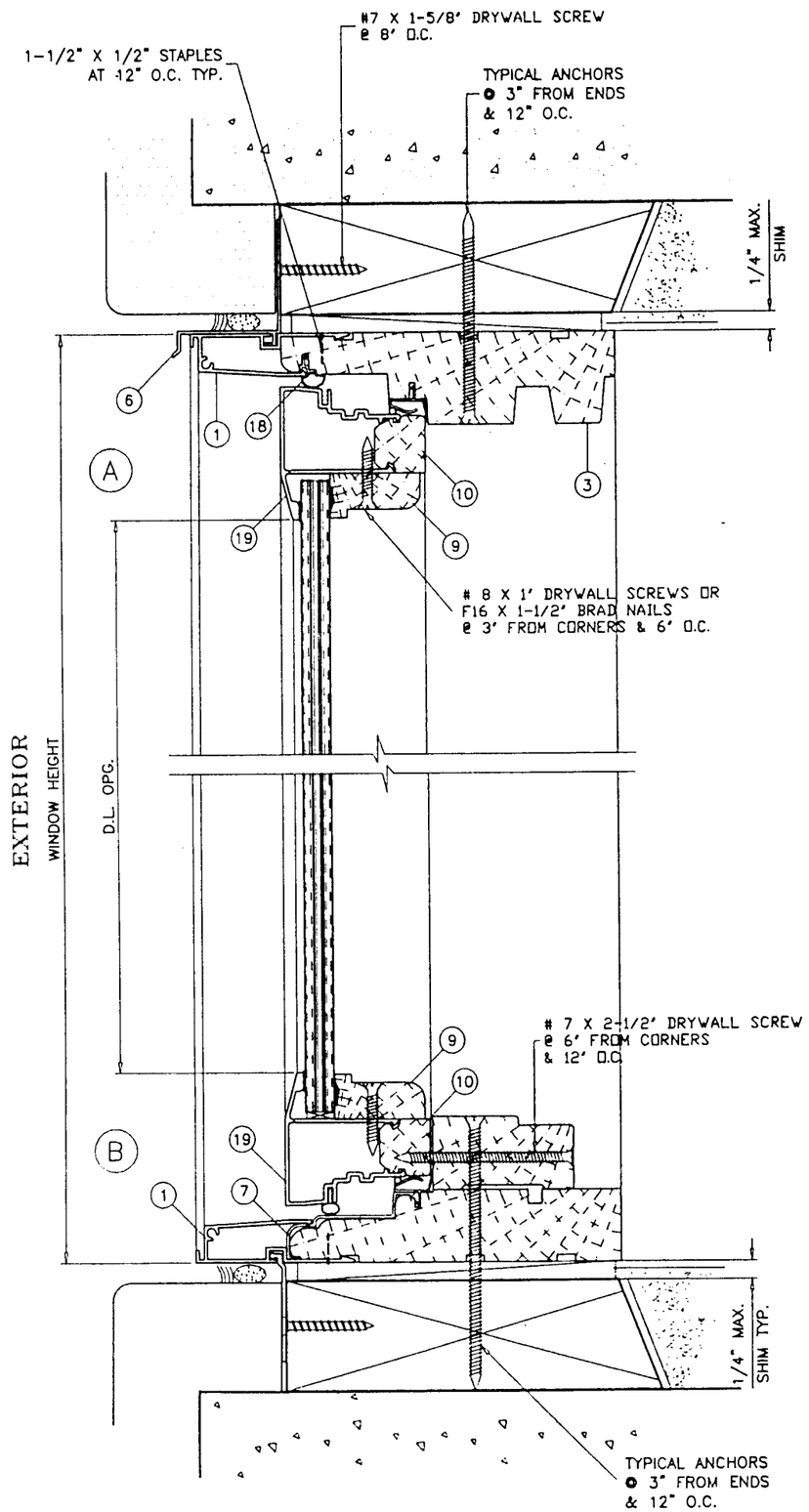

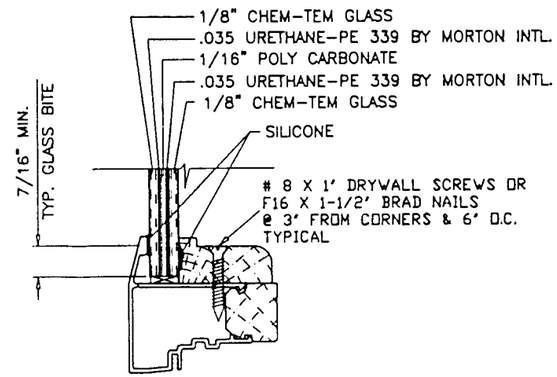

3/8" THICK NOMINAL
IMPACT GLASS
GLOBE AMERADA P380 WIND-PANE
NOA # 98-0513.03

TYPICAL ANCHORS:

INTO 2BY WOOD BUCKS OR WOOD STRUCTURE
10 SMS WITH 1-3/8" MIN. PENETRATION INTO WOOD

THRU WOOD BUCKS INTO MASONRY OR DIRECTLY INTO MASONRY
3/16" DIA. TAPCONS WITH 1-1/4" MIN. EMBED INTO MASONRY

SEALANTS

GLAZING SEAL – GE SILGLAZE 2801
EXT. CAP & FRAME JOINTS – GE SILGLAZE 2801

APPROVED AS COMPLYING WITH THE SOUTH FLORIDA BUILDING CODE
DATE APRIL 15 1999
BY Manuel Diaz
PRODUCT CONTROL DIVISION
BUILDING CODE COMPLIANCE OFFICE
ACCEPTANCE NO. 98-1110.09

Engr: DR. HUMAYOUN FAROOQ
STRUCTURES
FLA. PE # 16537
MAR 1 9 1999

PRODUCT RENEWED
ACCEPTANCE No. 02-0205.05
EXPIRATION DATE April 15, 2007
By
PRODUCT CONTROL DIVISION
BUILDING CODE COMPLIANCE OFFICE

AL-FAROOQ CORPORATION
ENGINEERS, PLANNERS & PRODUCT DESIGN
1235 SW 87 AVE
MIAMI, FLORIDA 33174
TEL. (305) 264-8100 FAX. (305) 262-6978
COMP-ANL\W98-69WS

'CONTEMPRA' TFT FIXED CASEMENT WINDOWS

WEATHER SHIELD WINDOWS & DOORS
MEDFORD, WISCONSIN. 54451
TEL. (715) 748-2100 FAX (715) 748-6064

revisions:

no	date	by	description

date: 10-03-98
scale: 1/2" = 1"
dr. by: HAMID
chk. by:

drawing no.
W98-69

sheet 2 of 5

DESIGN LOAD CAPACITY - PSF			
WINDOW DIMENSIONS		3/8" LAM. TEMP.GLASS	
WIDTH	HEIGHT	EXT.	INT.
36'	28-1/8'	75.0	75.0
40'		75.0	75.0
44'		75.0	75.0
48'		75.0	75.0
52-1/2'		75.0	75.0
60-1/2'		75.0	75.0
68-1/2'		75.0	75.0
76-1/2'		75.0	75.0
84-1/2'		75.0	75.0
100-1/2'		75.0	75.0
36'	32-1/8'	75.0	75.0
40'		75.0	75.0
44'		75.0	75.0
48'		75.0	75.0
52-1/2'		75.0	75.0
60-1/2'		75.0	75.0
68-1/2'		75.0	75.0
76-1/2'		75.0	75.0
84-1/2'		75.0	75.0
100-1/2'		75.0	75.0
36'	36-1/8'	75.0	75.0
40'		75.0	75.0
44'		75.0	75.0
48'		75.0	75.0
52-1/2'		75.0	75.0
60-1/2'		75.0	75.0
68-1/2'		75.0	75.0
76-1/2'		75.0	75.0
84-1/2'		75.0	75.0
100-1/2'		75.0	75.0
36'	40-1/8'	75.0	75.0
40'		75.0	75.0
44'		75.0	75.0
48'		75.0	75.0
52-1/2'		75.0	75.0
60-1/2'		75.0	75.0
68-1/2'		75.0	75.0
76-1/2'		75.0	75.0
84-1/2'		75.0	75.0
100-1/2'		70.0	70.0
36'	44-1/8'	75.0	75.0
40'		75.0	75.0
44'		75.0	75.0
48'		75.0	75.0
52-1/2'		75.0	75.0
60-1/2'		75.0	75.0
68-1/2'		75.0	75.0
76-1/2'		75.0	75.0
84-1/2'		75.0	75.0
100-1/2'		70.0	70.0

DESIGN LOAD CAPACITY - PSF			
WINDOW DIMENSIONS		3/8" LAM. TEMP.GLASS	
WIDTH	HEIGHT	EXT.	INT.
36'	48-1/8'	75.0	75.0
40'		75.0	75.0
44'		75.0	75.0
48'		75.0	75.0
52-1/2'		75.0	75.0
60-1/2'		75.0	75.0
68-1/2'		75.0	75.0
76-1/2'		75.0	75.0
84-1/2'		70.0	70.0
100-1/2'		70.0	70.0
36'	52-1/8'	75.0	75.0
40'		75.0	75.0
44'		75.0	75.0
48'		75.0	75.0
52-1/2'		75.0	69.5
60-1/2'		75.0	69.5
68-1/2'		75.0	69.5
76-1/2'		75.0	69.5
84-1/2'		70.0	69.5
100-1/2'		70.0	69.5
36'	58-1/8'	75.0	75.0
40'		75.0	75.0
44'		75.0	75.0
48'		75.0	75.0
52-1/2'		75.0	69.0
60-1/2'		75.0	62.3
68-1/2'		75.0	62.3
76-1/2'		70.0	62.3
84-1/2'		70.0	62.3
100-1/2'		70.0	62.3
36'	62-1/8'	75.0	75.0
40'		75.0	75.0
44'		75.0	75.0
48'		75.0	75.0
52-1/2'		75.0	69.0
60-1/2'		75.0	59.9
68-1/2'		70.0	58.3
76-1/2'		70.0	58.3
84-1/2'		70.0	58.3
100-1/2'		67.2	58.3
36'	72-1/8'	75.0	75.0
40'		75.0	75.0
44'		75.0	75.0
48'		75.0	75.0
52-1/2'		75.0	69.0
60-1/2'		70.0	59.9
68-1/2'		70.0	52.9
76-1/2'		70.0	50.2
84-1/2'		68.7	50.2

'CONTEMPRA' TFT FIXED CASEMENT WINDOWS IMPACT CHART BASED ON

HTL-0037-0209-98
SPECIMEN 1 TO 5 FOR PA 201 & PA 203
AND
ATI-16283-N-1
FOR PA 202

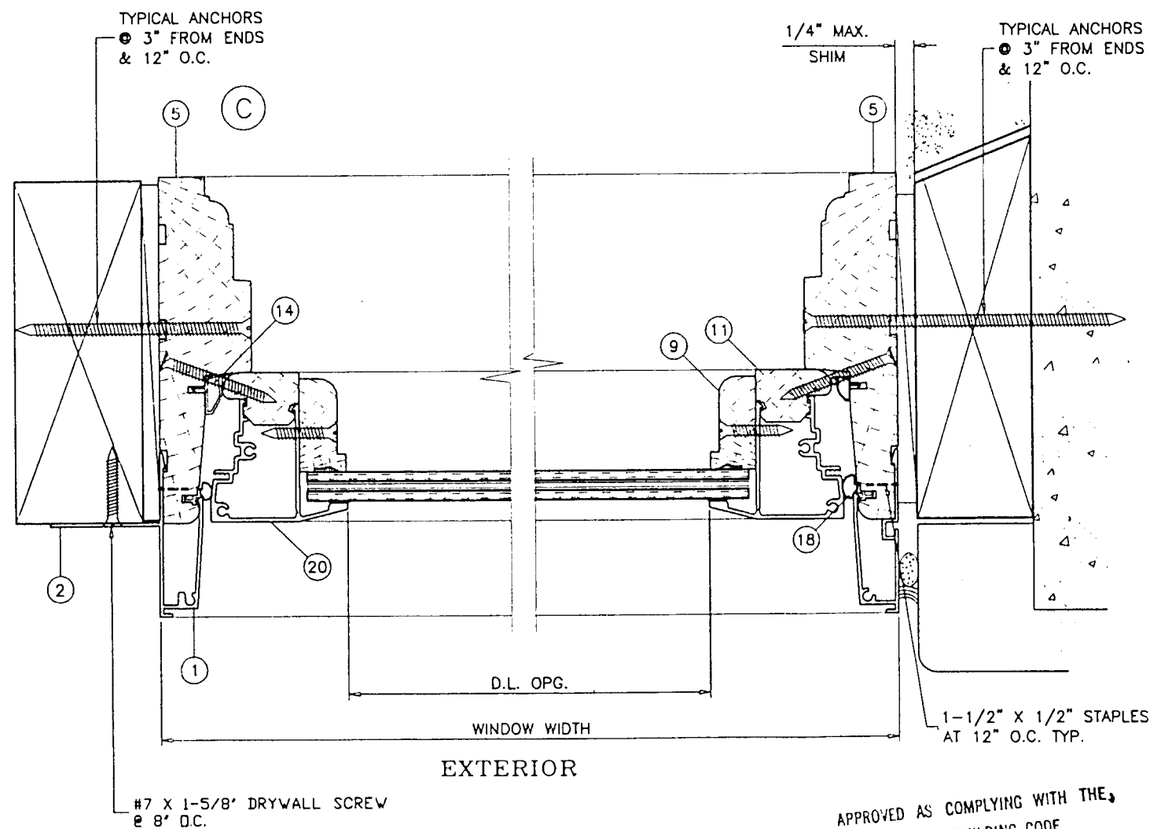

PRODUCT RENEWED
ACCEPTANCE No. 02-0705.05
EXPIRATION DATE April 15, 2007
By
PRODUCT CONTROL DIVISION
BUILDING CODE COMPLIANCE OFFICE

Engr: DR. HUMAYOUN FAROOQ
STRUCTURES
FLA. PE # 16557

APPROVED AS COMPLYING WITH THE SOUTH FLORIDA BUILDING CODE
DATE APRIL 15 19 99
BY
PRODUCT CONTROL DIVISION
BUILDING CODE COMPLIANCE OFFICE
ACCEPTANCE NO. 98-1110.09

AL-FAROOQ CORPORATION
ENGINEERS, PLANNERS & PRODUCT DESIGN
1235 SW 87 AVE
MIAMI, FLORIDA 33174
TEL. (305) 264-8100 FAX. (305) 262-6978

COMP-ANL\W98-69WS

'CONTEMPRA' TFT FIXED CASEMENT WINDOWS

WEATHER SHIELD WINDOWS & DOORS
MEDFORD, WISCONSIN. 54451
TEL. (715) 748-2100 FAX (715) 748-6064

revisions:

no	date	by	description

date: 10-03-98
scale: 1/2" = 1'
dr. by: HAMID
chk. by:

drawing no. W98-69

sheet 3 of 5

ITEM #	PART #	REQD.	DESCRIPTION	MATERIAL	MANF./SUPPLIER/REMARKS
1	900508	2	HEAD & SILL TFT	ALUMINUM	CAPITOL
2	780002	2	SIDE TRIM WITH NAILING FIN	ALUMINUM	CAPITOL
3	310003	1	HEAD JAMB	WOOD	WEATHER SHIELD
4	310004	1	SILL	WOOD	WEATHERSHIELD
5	310021	2	SIDE JAMBS	WOOD	WEATHER SHIELD
6	780011	1	DRIP CAP	ALUMINUM	CAPITOL
7	969911	1	SILL CLAD	ALUMINUM	CAPITOL
8	760103	1	SILL NAILING FIN	-	WEATHER SHIELD
9	-	4/SASH	GLASS STOP	WOOD	WEATHER SHIELD
10	-	2	SASH RAIL	WOOD	WEATHER SHIELD
11	-	2	SASH STILE	WOOD	WEATHER SHIELD
12	-	-	-	-	-
13	-	-	-	-	-
14	7600611	4	WEATHER STRIP	-	AMESBURY
15	-	-	-	-	-
16	-	-	-	-	-
17	-	-	-	-	-
18	760013	3	HEAD & SIDE JAMB W'STRIP	VINYL	WEATHER SHIELD
19	969378	2	SASH RAIL COVER	ALUMINUM	CAPITOL
20	969381	2	SASH STILE COVER	ALIMINUM	CAPITOL

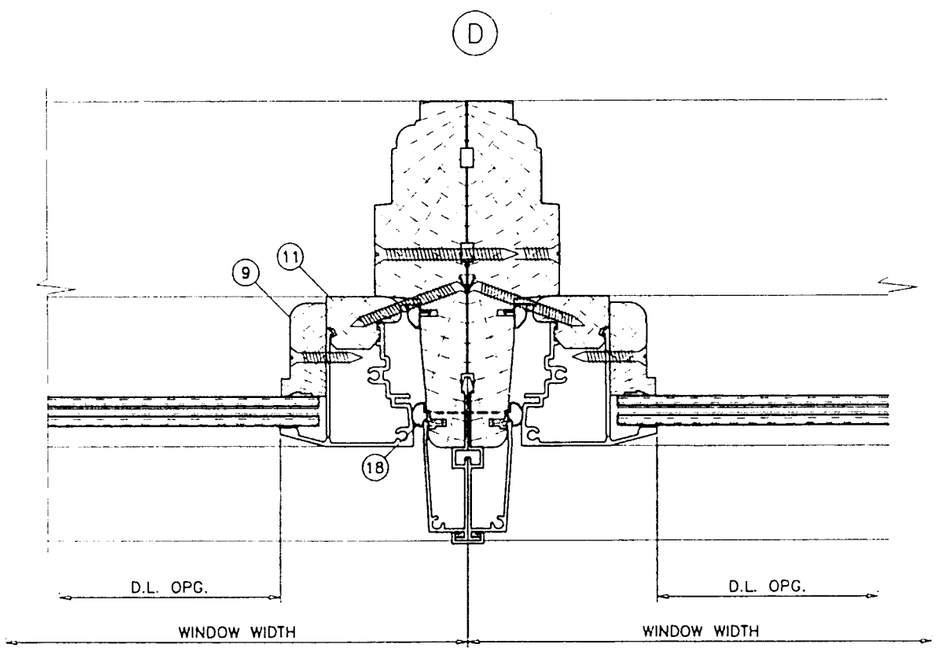

EXTERIOR

FOR SIDE BY SIDE MULLION AND MULLION ANCHOR CAPACITY
SEE 'WEATHER SHIELD' SEPARATE N.O.A.

Engr: DR. HUMAYOUN FAROOQ
STRUCTURES
FLA. PE # 16557
MAR 1 9 1998

PRODUCT RENEWED

ACCEPTANCE No. 02-0205.05

EXPIRATION DATE April 15, 2007

By

PRODUCT CONTROL DIVISION
BUILDING CODE COMPLIANCE OFFICE

APPROVED AS COMPLYING WITH THE
SOUTH FLORIDA BUILDING CODE
DATE APRIL 15 1999
BY
PRODUCT CONTROL DIVISION
BUILDING CODE COMPLIANCE OFFICE
ACCEPTANCE NO. 98-1110.09

AL-FAROOQ CORPORATION
ENGINEERS, PLANNERS & PRODUCT DESIGN
1235 SW 87 AVE
MIAMI, FLORIDA 33174
TEL (305) 264-8100 FAX. (305) 262-6978
COMP-ANL\W98-69WS

'CONTEMPRA' TFT FIXED CASEMENT WINDOWS

WEATHER SHIELD WINDOWS & DOORS
MEDFORD, WISCONSIN. 54451
TEL. (715) 748-2100 FAX (715) 748-6064

revisions:			
no	date	by	description

date: 10-03-98
scale: 1/2" = 1"
dr. by: HAMID
chk. by:

drawing no.
W98-69

sheet 4 of 5

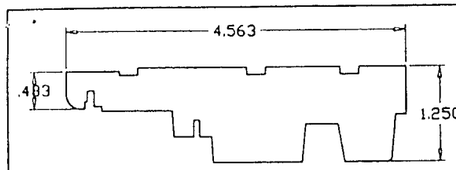

FRAME HEAD

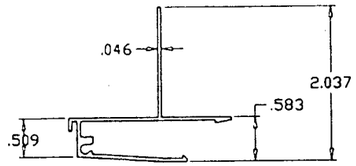

SIDE TRIM WITH NAILING FIN

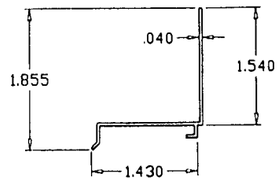

DRIP CAP

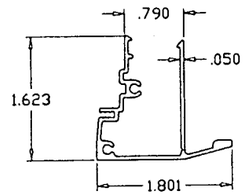

SASH STILE COVER

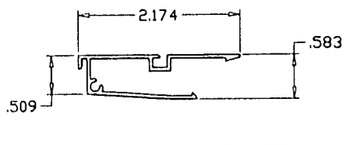

HEAD & SILL THIN FIN TRIM

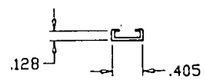

THIN FIN TRIM MULL STRIP

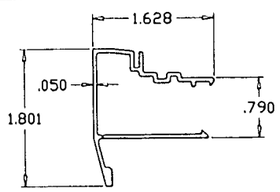

SASH RAIL COVER

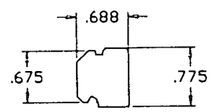

SASH RAIL

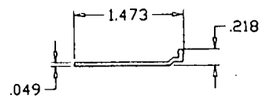

SILL NAILING FIN

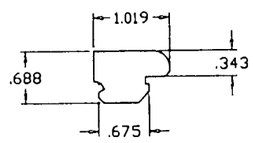

SASH STILE

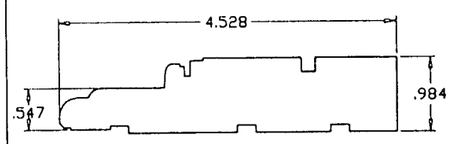

SILL

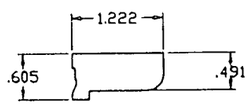

GLASS STOP

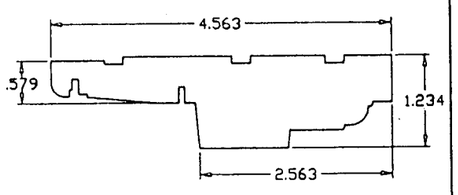

FRAME JAMB

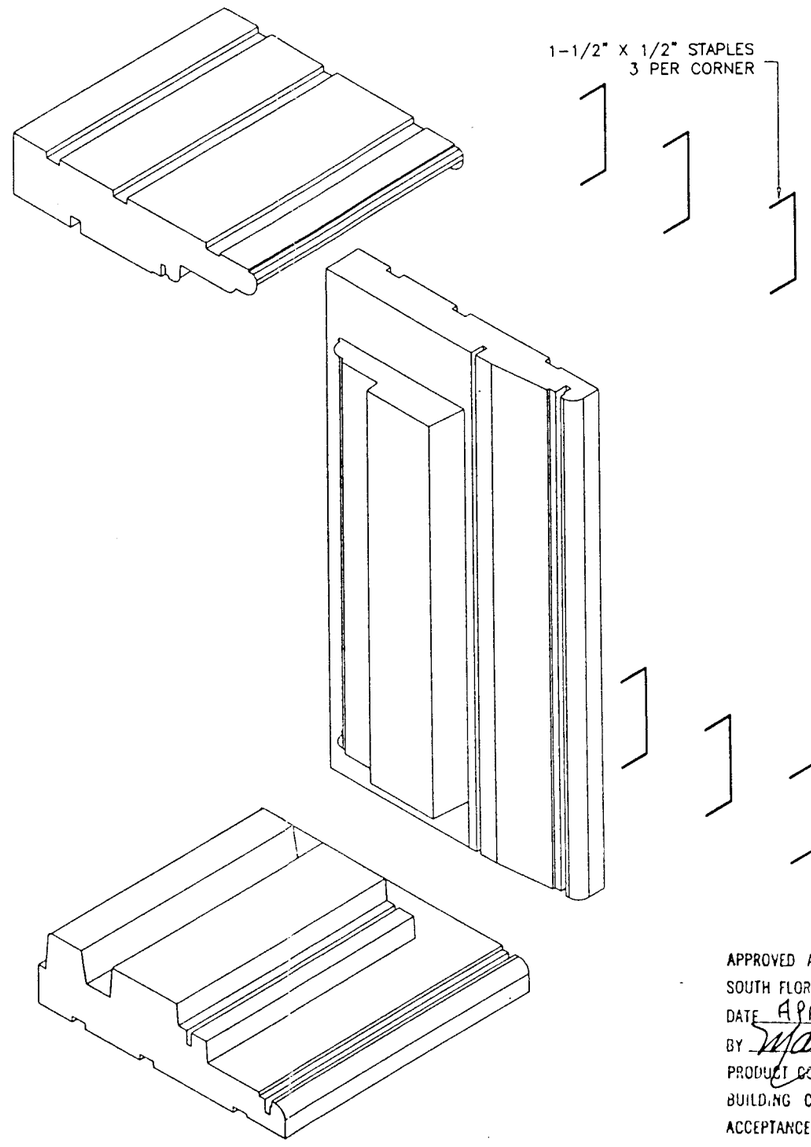

FRAME CORNER CONSTRUCTION

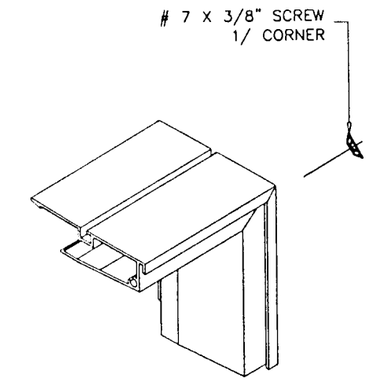

FIN CORNER CONSTRUCTION

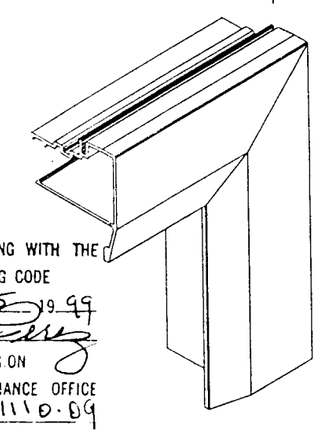

SASH CORNER CONSTRUCTION

APPROVED AS COMPLYING WITH THE
SOUTH FLORIDA BUILDING CODE
DATE APRIL 15 19 99
BY [signature]
PRODUCT CONTROL DIVISION
BUILDING CODE COMPLIANCE OFFICE
ACCEPTANCE NO. 98-1110.09

SEALANT:
ALL FRAME CORNERS, JOINTS AND EXTERIOR CAP SEALED WITH GE SILGLAZE 2801.

Engr: DR. HUMAYOUN FAROOQ
STRUCTURES
FLA. PE # 16537

MAR 19 1999

PRODUCT RENEWED

ACCEPTANCE No. 02-0205.05

EXPIRATION DATE April 15, 2007

By [signature]
PRODUCT CONTROL DIVISION
BUILDING CODE COMPLIANCE OFFICE

AL-FAROOQ CORPORATION
ENGINEERS, PLANNERS & PRODUCT DESIGN
1235 SW 87 AVE
MIAMI, FLORIDA 33174
TEL. (305) 264-8100 FAX. (305) 262-6978
COMP-ANL\W98-69WS

'CONTEMPRA' TFT FIXED CASEMENT WINDOWS

WEATHER SHIELD WINDOWS & DOORS
MEDFORD, WISCONSIN. 54451
TEL (715) 748-2100 FAX (715) 748-6064

revisions:

no	date	by	description

date: 10-03-98
scale: 1/2" = 1"
dr. by: HAMID
chk. by:

drawing no. W98-69

sheet 5 of 5