MIAMI-DADE

BUILDING CODE COMPLIANCE OFFICE (BCCO)
PRODUCT CONTROL DIVISION

MIAMI-DADE COUNTY, FLORIDA
METRO-DADE FLAGLER BUILDING
140 WEST FLAGLER STREET, SUITE 1603
MIAMI, FLORIDA 33130-1563
(305) 375-2901 FAX (305) 375-2908

NOTICE OF ACCEPTANCE (NOA)

GAMMA, U. S. A.
15407 West Dixie Highway
N. Miami, FL 33162

SCOPE:

This NOA is being issued under the applicable rules and regulations governing the use of construction materials. The documentation submitted has been reviewed by the BCCO and accepted by the Building Code and Product Review Committee (BCPRC) to be used in Miami Dade County and other areas where allowed by the Authority Having Jurisdiction (AHJ).

This NOA shall not be valid after the expiration date stated below. The BCCO (In Miami Dade County) and/or the AHJ (in areas other than Miami Dade County) reserve the right to have this product or material tested for quality assurance purposes. If this product or material fails to perform in the accepted manner, the manufacturer will incur the expense of such testing and the AHJ may immediately revoke, modify, or suspend the use of such product or material within their jurisdiction. BCPRC reserves the right to revoke this acceptance, if it is determined by BCCO that this product or material fails to meet the requirements of the applicable building code.

This product is approved as described herein, and has been designed to comply with the South Florida Building Code, 1994 Edition for Miami-Dade County or Florida Building Code.

DESCRIPTION: Series 35.1 Aldora Aluminum Sliding Glass Door (OX)

APPROVAL DOCUMENT: Drawing No. **SGD35.1SI**, titled "Series 35.1 Aluminum Sliding Glass Door S. I. ", sheets 1 through 4 of 4, prepared by manufacturer, dated 13-07-01 and last revised on 02-07-02., signed and sealed by Farrokh Rasekhi, P. E., bearing the Miami-Dade County Product Control Approval stamp with the Notice of Acceptance number and approval date by the Miami-Dade County Product Control Division.

MISSILE IMPACT RATING: Small Missile Impact Resistant

LABELING: Each unit shall bear a permanent label with the manufacturer's name or logo, city, state and following statement: "Miami-Dade County Product Control Approved", unless otherwise noted herein.

RENEWAL of this NOA shall be considered after a renewal application has been filed and there has been no change in the applicable building code negatively affecting the performance of this product.

TERMINATION of this NOA will occur after the expiration date or if there has been a revision or change in the materials, use, and/or manufacture of the product or process. Misuse of this NOA as an endorsement of any product, for sales, advertising or any other purposes shall automatically terminate this NOA. Failure to comply with any section of this NOA shall be cause for termination and removal of NOA.

ADVERTISEMENT: The NOA number preceded by the words Miami-Dade County, Florida, and followed by the expiration date may be displayed in advertising literature. If any portion of the NOA is displayed, then it shall be done in its entirety.

INSPECTION: A copy of this entire NOA shall be provided to the user by the manufacturer or its distributors and shall be available for inspection at the job site at the request of the Building Official.

This NOA **revises 01-0921.03** and consists of this page 1 as well as approval document mentioned above.
The submitted documentation was reviewed by **Ishaq I. Chanda, P. E.**

PRODUCT CONTROL ACCEPTED

35.1 | ALDORA | 3 | X0 | 36 | 120 | 170 | SI

Gamma
15407 West Dixie Highway,
North Miami Beach, FL 33162
Phone: (305) 957-7004 FAX: (305) 957-7006

ALDORA

PROJECT:	SERIES:35.1 ALUMINUM SLIDING GLASS DOOR S.I. FTL # 3181	DATE:	13-07-01
		PROJECT #	0113
TITLE:	TYPICAL ELEVATION(FTL #3181)	SCALE:	1/2" = 1"

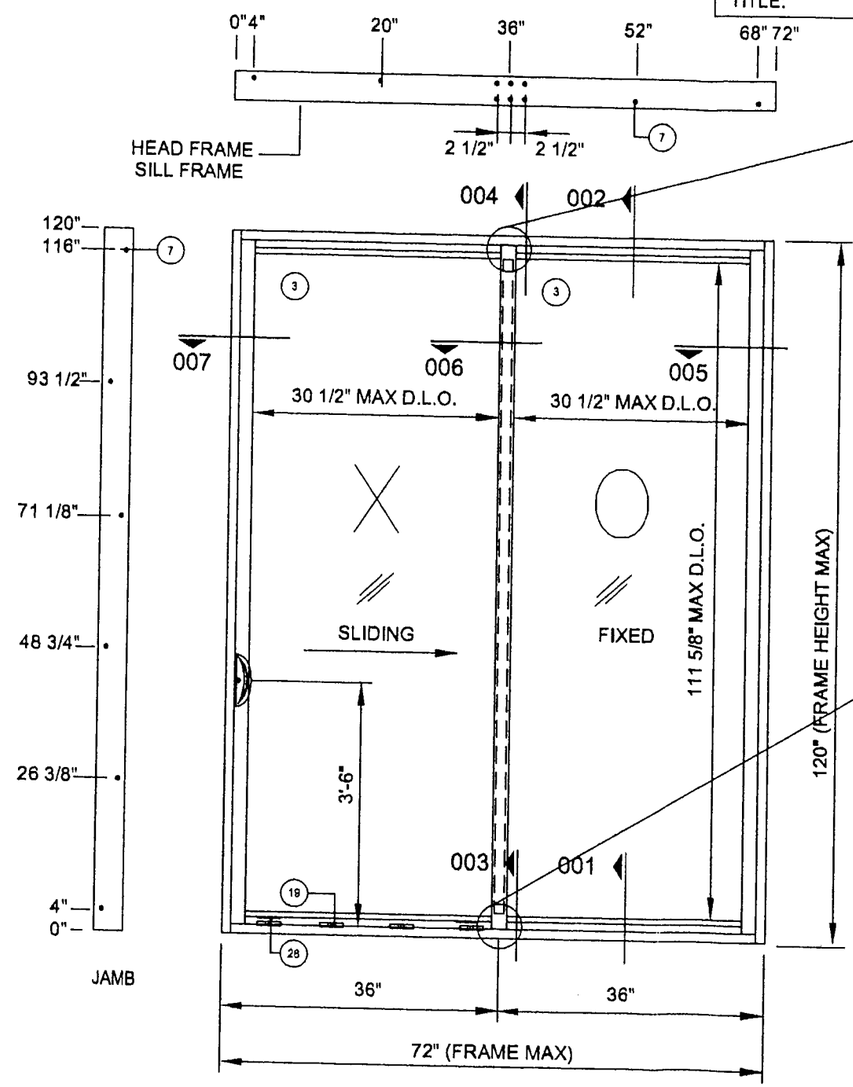

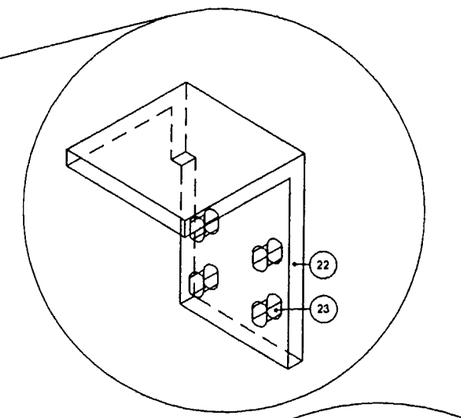

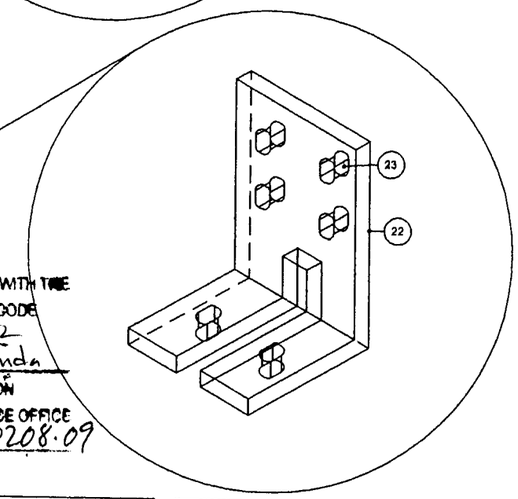

Farrokh Rasekhi, P.E.
Consulting Struct. Engineer
FL. REG. NO. 38001
2/7/02

APPROVED AS COMPLYING WITH THE SOUTH FLORIDA BUILDING CODE
DATE March 07, 2002
BY Ishaq I. Chanda
PRODUCT CONTROL DIVISION
BUILDING CODE COMPLIANCE OFFICE
ACCEPTANCE NO. 02-0208.09

SHUTTER REQUIREMENTS:
1- INSTALLATION OF THIS UNIT ABOVE 30 FT ABOVE GRADE WILL NOT REQUIRE SHUTTERS
2- MIAMI DADE COUNTY APPROVED SHUTTERS WIL BE REQUIRED FOR BELOW 30 FT ABOVE THE GRADE

SMALL IMPACT TEST
DESIGN PRESSURE + 100 psf
DESIGN PRESSURE - 170 psf

W/ 9/16" LAMINATED GLASS:
1/4"TEMPERED GLASS
0.060 SAFLEX/ KEEPSAFE PVB BY SOLUTIA
1/4" TEMPERED GLASS, LAMINATED BY PRELCO

NOTES:
1- MAX SHIM SPACE OF 1/4"
2- REFER TO BILL OF MATERIAL FOR COMPLETE DESCRIPTION

TYPICAL ELEVATION
EXTERIOR VIEW

REVISION:	R3 1-10-02	R4 02-07-02
DRAWN BY:	R1 08/03/01	R2 08/29/01
CHECKED BY:	J. D'HONDT	
CAD NAME:	D0113SGD1	

1/4

Licensee RBQ 1150-5527-22

35.1 | ALDORA | 3 | XO | 36 | 120 | 170 | SI

Gamma
15407 West Dixie Highway,
North Miami Beach, FL 33162
Phone: (305) 957-7004 FAX: (305) 957-7006

ALDORA

PROJECT:	SERIES 35.1 ALUMINUM SLIDING GLASS DOOR S.I. FTL#3181	DATE:	13-07-01
		PROJECT #	0113
TITLE:	SECTIONS 005 TO 007	SCALE:	1/2" = 1"

Farrokh Rasekhi, P.E.
Consulting Struct. Engineer
FL. REG. NO. 38001
2/7/02

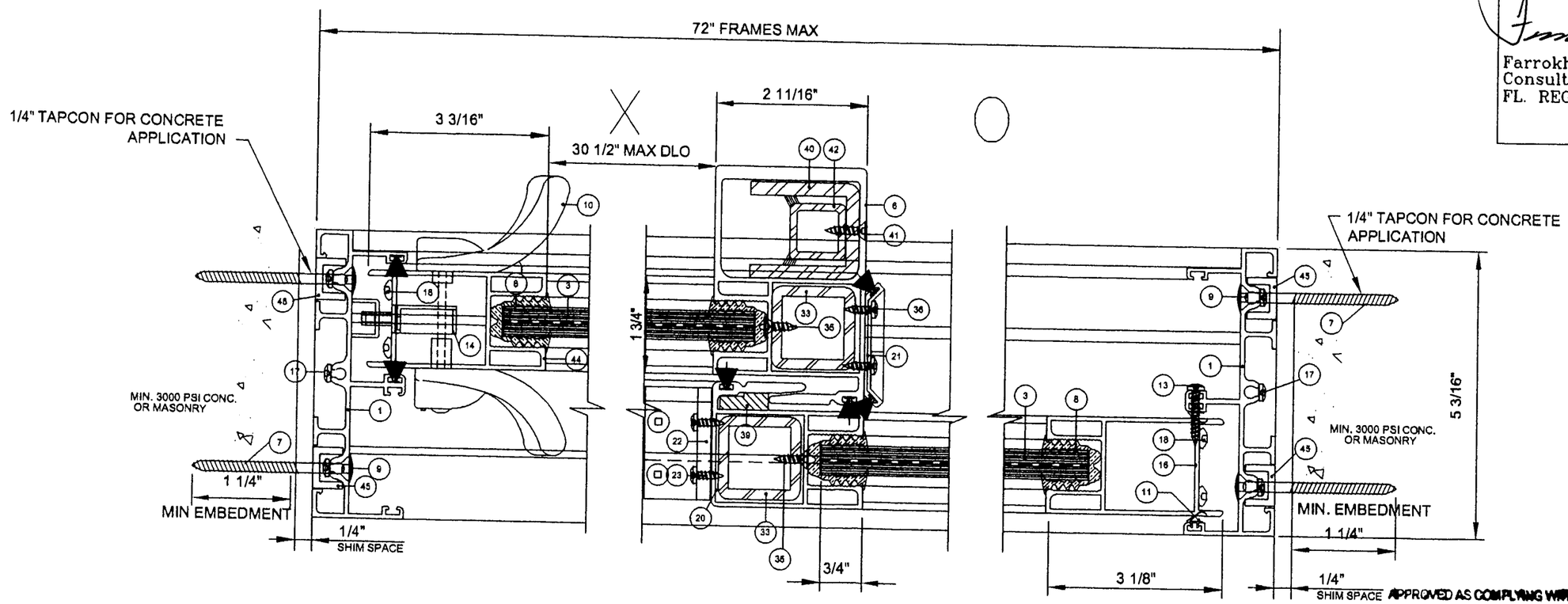

EXTERIOR

detail 007 | detail 006 | detail 005

APPROVED AS COMPLYING WITH THE SOUTH FLORIDA BUILDING CODE
DATE March 07, 2002
BY Ishaq I. Chanda
PRODUCT CONTROL DIVISION
BUILDING CODE COMPLIANCE OFFICE
ACCEPTANCE NO. 02-0208.09

NOTES:

1- MAX SHIM SPACE OF 1/4"

2- REFER TO BILL OF MATERIAL FOR COMPLETE DESCRIPTION

REVISION:	R1 08/03/01	R2 08/29/01
	R3 1-10-02	R4 02-07-02
DRAWN BY:	J. D'HONDT	
CHECKED BY:		
CAD NAME:	D0113SGD1	

2 / 4

Licence RBQ 1150-5527-22

35.1 | ALDORA | 3 | X0 | 36 | 120 | 170 | SI

Gamma
15407 West Dixie Highway,
North Miami Beach, FL 33162
Phone: (305) 957-7004 FAX: (305) 957-7006

ALDORA

PROJECT:	SERIES: 35.1 ALUMINUM SLIDING GLASS DOOR S.I. FTL # 3181	DATE:	13-07-01
		PROJECT #	0113
TITLE:	SECTIONS 001 TO 004	SCALE:	1/2" = 1"

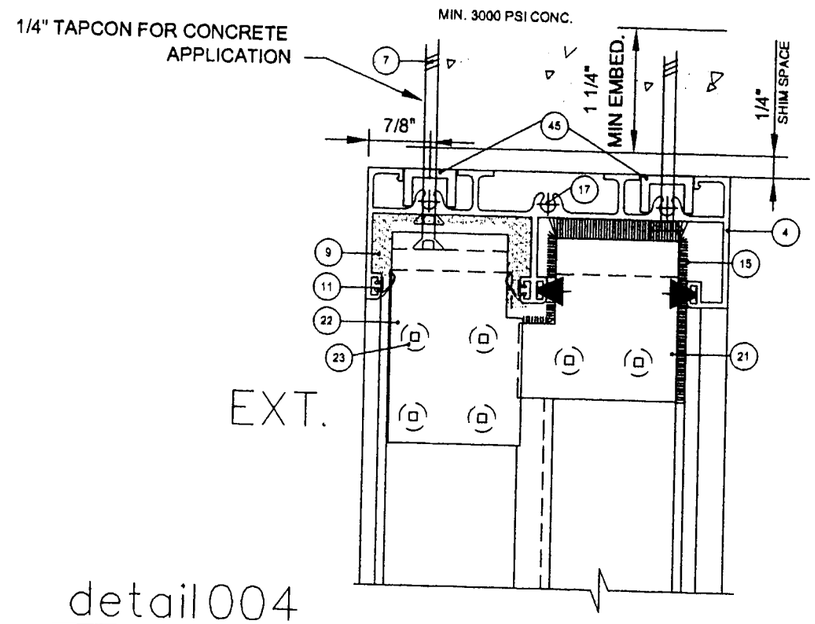

detail004

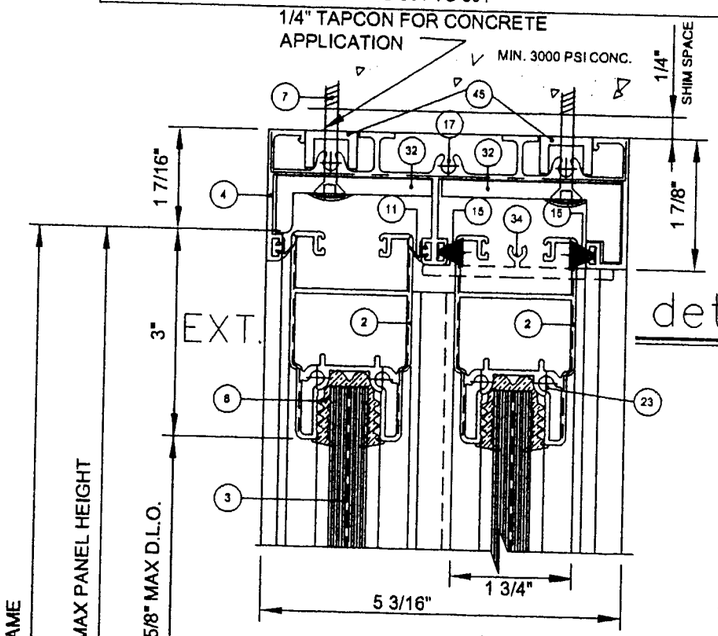

detail002

FRAME CORNERS SEALED WITH WHITE COLORED SEALANT AS INDICATED

PANEL CORNERS SEAM SEALED WITH CLEAR SEALANT AS INDICATED

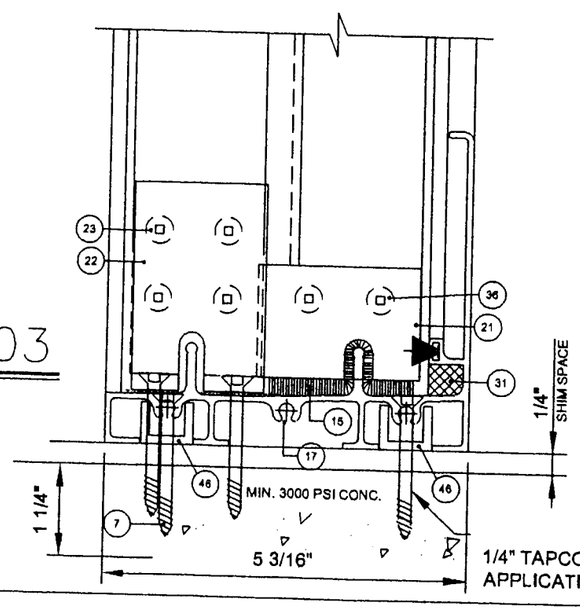

detail003

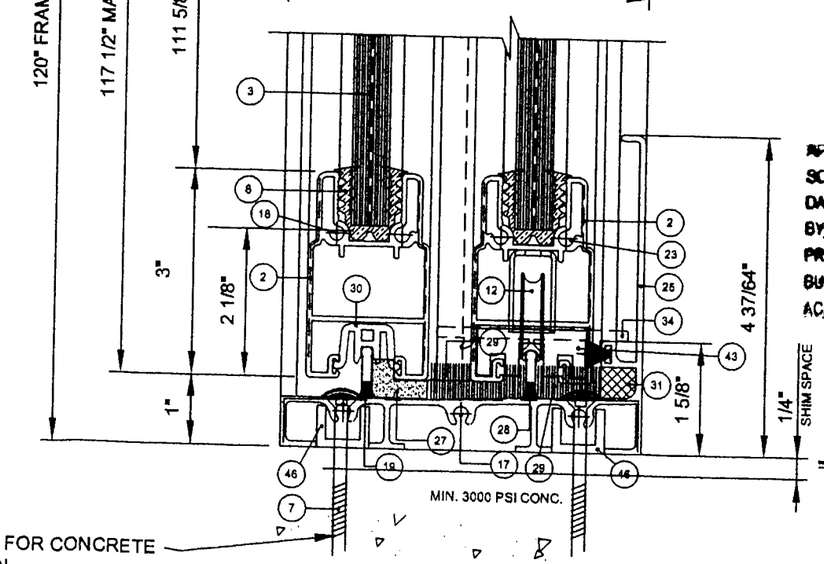

detail 001

Farrokh Rasekhi, P.E.
Consulting Struct. Engineer
FL. REG. NO. 38001
2/7/02

APPROVED AS COMPLYING WITH THE SOUTH FLORIDA BUILDING CODE
DATE March 07, 2002
BY Ishaq I. Chanda
PRODUCT CONTROL DIVISION
BUILDING CODE COMPLIANCE OFFICE
ACCEPTANCE NO. 02-0208.09

NOTES:
1- MAX SHIM SPACE OF 1/4"
2- REFER TO BILL OF MATERIAL FOR COMPLETE DESCRIPTION

REVISION:	R3 1-10-02	R4 02-07-02
	R1 08/03/01	R2 08/29/01
DRAWN BY:	J. D'HONDT	
CHECKED BY:		
CAD NAME:	D0113sgd1	

3 / 4

Licence RBQ 1150-5527-22

35.1	ALDORA	3	XO	36	120	170	SI

DESCRIPTION

1	ALUMINUM FRAME (JAMB # XA-90636) AL 6063 T6
2	ALUMINUM SASH (TOP & BOTTOM RAIL # 997904) (JAMB # 997908) AL 6063 T6
3	9/16" LAMINATED GLASS 1/4" TEMPERED GLASS (EXT.) GLASS BITE: 0.690" 0.060" SAFLEX/ KEEPSAFE PVB BY SOLUTIA 1/4" TEMPERED GLASS (INT.), LAMINATED BY PRELCO
4	ALUMINUM FRAME (TOP# XA-92256) AL 6063 T6 (HEAD)
6	METTING RAIL DIE # 997906 AL 6063 T6 (INTERLOCK)
7	ELCO TAPCON SCREW 1/4" DIA. 2 1/4" LONG. (min. 1 1/4" embedment)
8	TPR EXTRUDED GASKET TP116
9	SCELLANT SPECTREM2 (TREMCO)
10	TRUTH PLASTIC HANDLE # 40 STYLINE AND SINGLE POINT MORTISE LOCK #11487
11	POLYFLEX GASKET
12	TRUTH ROLLER # 39.20 (2 SETS PER SASH)
13	#8 X 1" PH STS SCREW (5 PER FIXED PANEL)
14	THREE PLY STEEL HOOK LOCK / TRUTH 2300-1063
15	CONTINUOUS MOHAIR # DIE FS7635-187 SCHLEGEL
16	ALUMINUM FIXED SASH (TOP & BOTTOM RAIL # 997904) AL 6063 T6
17	STAINLESS STEEL ASSEMBLY SCREWS 1/4" X 20 X 1" LONG (12 PER FRAME)
18	STAINLESS STEEL ASSEMBLY SCREWS 1/4" X 20 X 1 1/4" LONG (8 PER PANEL)
19	DRAINING OUTSIDE RAIL (4X) SLOTS 1/4"X2"
20	METTING RAIL DIE # 997907 AL 6063 T6
21	PLASTIC MOULDING FOR MOHAIR AT HEAD & SILL
22	ALUMINUM ANGLE AT HEAD AND SILL 2"X3 1/4"X2 1/4"X1/4" THICK (SEAL WITH SPECTREM2)
23	1/4"-20 X 1 1/2" LONG. STAINLESS STEEL SCREW (4 PER ANGLE)
25	ALUMINUM SILL FRAME (BOTTOM #947476) AL. 6360 T6
27	FOAM UNDER FIXED PANEL 5/8" X 3/4"X 36 1/2"
28	DRAINING INSIDE RAIL (2X) SLOTS 1/4"X2"
29	MOHAIR PAD AT METTING RAIL (1"X 3 3/4" BELOW INTERLOCK STILE AND BELOW MOVING PANEL INTERLOCK STILE)
30	28" PLASTIC EXTRUSION SUPPORT FOR FIXED PANEL # 51022000
31	PLASTIC BLOC AT MEETING RAIL
32	1/4 " REINFORCEMENT ALUMINUM ANGLE 7" LONG (INTERLOCK)
33	REINFORCEMENT 1 1/2" X 1 1/2" X 3/16" THICK X 111 1/2" LONG ASTM 33 GRADE STEEL
34	PVC DOOR STOPPER
35	#8 F.H. STAINLESS STEEL METAL SCREW 1" LONG (2 PER REINFORCEMENT)
36	#8 x 3/4 PH STS/ST SCREW (2 PER SWEEP)
39	3 " PLASTIC SHIM (2 PER INTERLOCK)
40	CHANNEL STEEL REINFORCEMENT 1 7/8" X 1 3/4 X 1 7/8"X 1/4" THICK X 111 1/2" LONG ASTM 33 GRADE STEEL
41	#14 x 3/4" F.H. STS METAL SCREW TOP AND BOTTOM
42	HSS 1" X 1" X 1/8" X 20" LONG SPOT WELDED 1" EACH END AND DIVIDE BY 3
43	ONE 3/4" x 1 9/16" x 6" PLASTIC GUIDE SCREW WITH 1 #8 F.H. SCREW
44	ALUM. SASH (STILES) FIX / OPERABLE # 997908 AL. 6063 T6
45	ALUM. FOLDING 1/8" THICK. x 17/32" x 3/4" x 17/32" x 0'-3" LONG. (FOR HEAD & JAMBS)
46	ALUM. FOLDING 1/8" THICK. x 5/8" x 3/4" x 5/8" x 0'-3" LONG. (FOR SILL)

Gamma
15407 West Dixie Highway,
North Miami Beach, FL 33162
Phone: (305) 957-7004 FAX: (305) 957-7006

ALDORA

PROJECT:	SERIES: 35.1 ALUMINUM SLIDING GLASS DOOR S.I. FTL # 3181	DATE:	13-07-01
		PROJECT #	0113
TITLE:	DESCRIPTION LIST	SCALE:	

Farrokh Rasekhi, P.E.
Consulting Struct. Engineer
FL. REG. NO. 38001
2/7/02

APPROVED AS COMPLYING WITH THE
SOUTH FLORIDA BUILDING CODE
DATE March 07, 2002
BY Ishaq I. Chanda
PRODUCT CONTROL DIVISION
BUILDING CODE COMPLIANCE OFFICE
ACCEPTANCE NO. 02-0208.09

NOTE: SEAL ALL INSTALLATION FASTENER HEADS, WITH SILICONE SEALANT SPECTREM2
FRAME CORNER, PERIMETER ANGLES ARE SEALED WITH SILICONE SEALANT SPECTREM2
PANEL CORNER SEAMS ARE SEALED WITH GUTTER SEAL

REVISION:	R1 08/03/01	R3 1-10-02
	R2 08/29/01	R4 02-07-02
DRAWN BY:	J. D'HONDT	
CHECKED BY:		
CAD NAME:	D0113SGD1	

4 / 4

Licensn RBQ 1150-5527-22