MIAMI-DADE

BUILDING CODE COMPLIANCE OFFICE (BCCO)
PRODUCT CONTROL DIVISION

MIAMI-DADE COUNTY, FLORIDA
METRO-DADE FLAGLER BUILDING
140 WEST FLAGLER STREET, SUITE 1603
MIAMI, FLORIDA 33130-1563
(305) 375-2901 FAX (305) 375-2908

NOTICE OF ACCEPTANCE (NOA)

YKK AP America Inc. ,
5630 Gwaltney Drive
Atlanta, GA 30336

SCOPE:
This NOA is being issued under the applicable rules and regulations governing the use of construction materials. The documentation submitted has been reviewed by Miami-Dade County Product Control Division and accepted by the Board of Rules and Appeals (BORA) to be used in Miami Dade County and other areas where allowed by the Authority Having Jurisdiction (AHJ).

This NOA shall not be valid after the expiration date stated below. The Miami-Dade County Product Control Division (In Miami Dade County) and/or the AHJ (in areas other than Miami Dade County) reserve the right to have this product or material tested for quality assurance purposes. If this product or material fails to perform in the accepted manner, the manufacturer will incur the expense of such testing and the AHJ may immediately revoke, modify, or suspend the use of such product or material within their jurisdiction. BORA reserves the right to revoke this acceptance, if it is determined by Miami-Dade County Product Control Division that this product or material fails to meet the requirements of the applicable building code.

This product is approved as described herein, and has been designed to comply with the High Velocity Hurricane Zone of the Florida Building Code.

DESCRIPTION: Series "YHS-50" Aluminum Glazed Storefront System-Impact

APPROVAL DOCUMENT: Drawing No. **W01-47**, titled "YHS-50 Alum Flush Glaze Storefront Sys. (L. M)", sheets 1 through 15 of 15, dated 07-25-01 and last revised on 7-26-02, prepared by Al-Farooq Corporation, signed and sealed by Dr. Humayuon Farooq, P.E., bearing the Miami-Dade County Product Control stamp with the Notice of Acceptance number and expiration date by the Miami-Dade County Product Control Division.

MISSILE IMPACT RATING: Large Missile Impact

LABELING: Each unit shall bear a permanent label with the manufacturer's name or logo, city, state and following statement: "Miami-Dade County Product Control Approved", unless otherwise noted herein.

RENEWAL of this NOA shall be considered after a renewal application has been filed and there has been no change in the applicable building code negatively affecting the performance of this product.

TERMINATION of this NOA will occur after the expiration date or if there has been a revision or change in the materials, use, and/or manufacture of the product or process. Misuse of this NOA as an endorsement of any product, for sales, advertising or any other purposes shall automatically terminate this NOA. Failure to comply with any section of this NOA shall be cause for termination and removal of NOA.

ADVERTISEMENT: The NOA number preceded by the words Miami-Dade County, Florida, and followed by the expiration date may be displayed in advertising literature. If any portion of the NOA is displayed, then it shall be done in its entirety.

INSPECTION: A copy of this entire NOA shall be provided to the user by the manufacturer or its distributors and shall be available for inspection at the job site at the request of the Building Official.
This NOA **revises NOA # 00-0315.02** and consists of this page 1 as well as approval document mentioned above.
The submitted documentation was reviewed by **Ishaq I. Chanda, P.E.**

PRODUCT CONTROL ACCEPTED

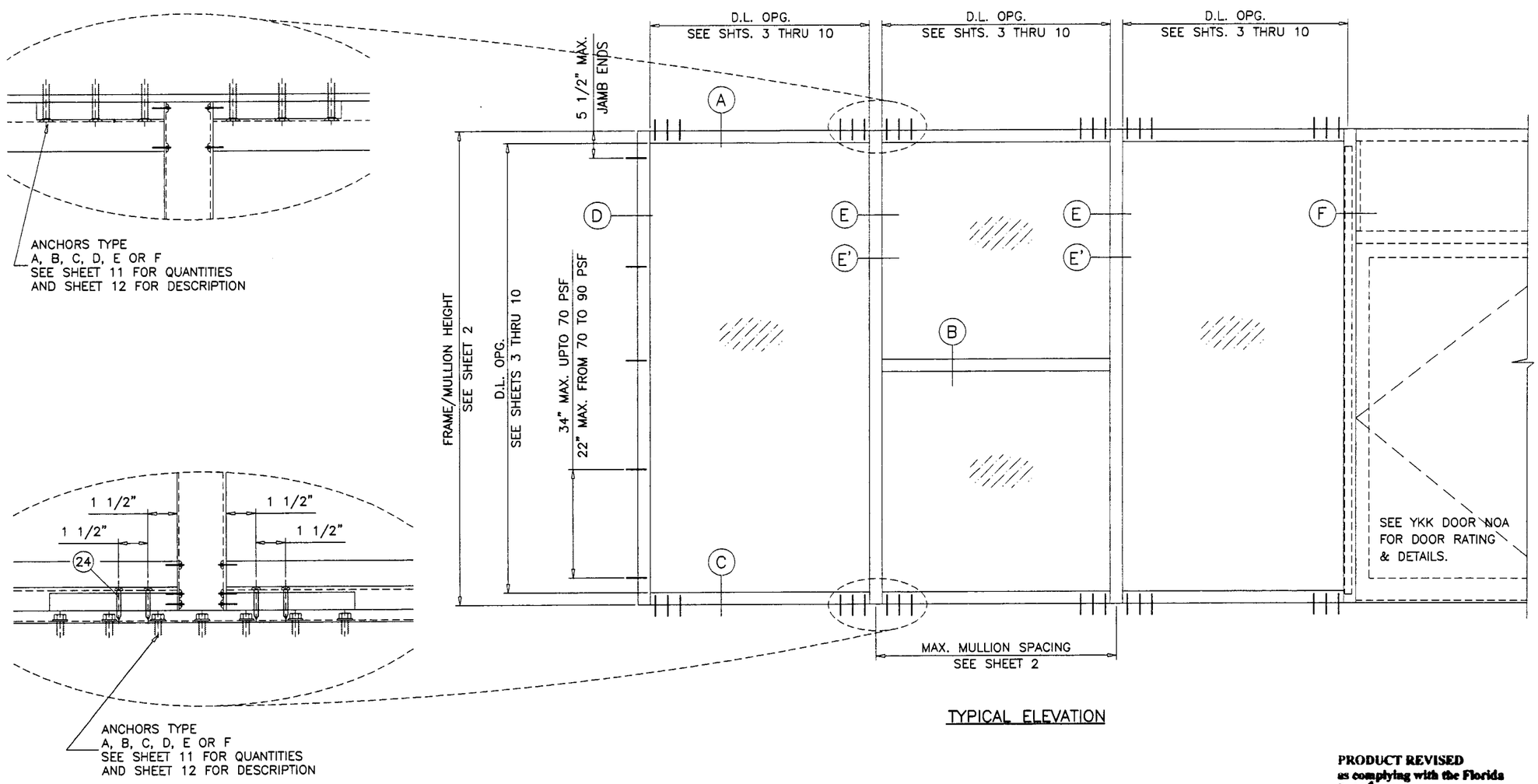

TYPICAL ELEVATION

PRODUCT REVISED
as complying with the Florida Building Code
Acceptance No. 02-0215.16
Expiration Date AUG 15, 2007
By Ishaq I. Chanda
Miami Dade Product Control Division

ALUMINUM FLUSH GLAZED STOREFRONT SYSTEM SERIES YHS-50

THIS SYSTEM MAY BE USED IN CONJUNCTION WITH OUTSWING ENTRANCE DOORS MODEL 35H.

THIS SYSTEM IS RATED FOR LARGE MISSILE IMPACT. SHUTTERS NOT REQUIRED.

CODE REQUIREMENTS FOR SAFEGUARDS MUST BE OBSERVED FOR ANY KIND OF GLASS BEING USED.

THIS PRODUCT IS DESIGNED TO COMPLY WITH THE HIGH VELOCITY HURRICANE ZONE OF THE 2001 FLORIDA BUILDING CODE.
ALSO FOR WIND LOADS AS PER ASCE 7 USING CORRESPONDING LOADS.

WOOD BUCKS BY OTHERS, MUST BE ANCHORED PROPERLY TO TRANSFER LOADS TO THE STRUCTURE.

ANCHORS SHALL BE AS LISTED, SPACED AS SHOWN ON DETAILS. ANCHOR EMBEDMENT TO BASE MATERIAL SHALL BE BEYOND WALL DRESSING OR STUCCO.

ALL STEEL IN CONTACT WITH ALUMINUM TO BE PAINTED OR PLATED.

INSTRUCTIONS:

USE CHARTS AS FOLLOWS.

STEP 1 DETERMINE DESIGN WIND LOAD REQUIREMENT BASED ON WIND VELOCITY, BLDG. HEIGHT, WIND ZONE USING APPLICABLE ASCE 7 STANDARD.

STEP 2 CHECK MULLION CAPACITY FOR A GIVEN SPACING AND HEIGHT USING CHARTS ON SHEET 2. THE CAPACITY SHOULD EXCEED THE DESIGN LOAD.

STEP 3 SEE CHARTS ON SHEETS 3 THRU 10 FOR DESIGN LOAD CAPACITY OF DESIRED GLASS SIZE.

STEP 4 USING CHART ON SHEET 11 SELECT ANCHOR OPTION WITH DESIGN RATING MORE THAN DESIGN LOAD SPECIFIED IN STEP 1 ABOVE.

Engr: DR. HUMAYOUN FAROOQ
STRUCTURES
FLA. PE # 13557

JUL 2 6 2002

AL-FAROOQ CORPORATION
ENGINEERS, PLANNERS & PRODUCT DESIGN
1235 SW 87 AVE
MIAMI, FLORIDA 33174
TEL. (305) 264-8100 FAX. (305) 262-6978
STORE\W01-47YKK

YHS-50 ALUM FLUSH GLAZE STOREFRONT SYS. (L.M.)

YKK AP AMERICA INC.
5630 GWALTNEY DRIVE
ATLANTA, GA. 30336
TEL(404) 629-3800 FAX(404) 629-3810

revisions:			
no	date	by	description
A	06.17.02		REV. PER BCCO COMMENTS
B	07.23.02		REV. PER BCCO COMMENTS

date: 07-25-01
scale: 1/2"=1'-0"
dr. by: HAMID
chk. by:

drawing no.
W01-47

MULLION LOAD CAPACITY - PSF					
NOMINAL DIMS.		W/O STEEL REINF.		WITH STEEL REINF.	
WIDTH (W)	FRAME HEIGHT	EXT. (+)	INT. (−)	EXT. (+)	INT. (−)
36"	72"	55.0	70.0	70.0	90.0
39"		55.0	70.0	70.0	90.0
42"		55.0	70.0	70.0	90.0
45"		55.0	70.0	70.0	90.0
48"		55.0	70.0	70.0	90.0
51"		55.0	70.0	70.0	90.0
54"		55.0	70.0	70.0	90.0
57"		55.0	70.0	70.0	90.0
60"		55.0	70.0	70.0	90.0
63"		55.0	70.0	70.0	90.0
66"		55.0	70.0	70.0	90.0
69"		55.0	70.0	70.0	90.0
72"		55.0	70.0	70.0	90.0
75"		55.0	70.0	70.0	90.0
36"	78"	55.0	70.0	70.0	90.0
39"		55.0	70.0	70.0	90.0
42"		55.0	70.0	70.0	90.0
45"		55.0	70.0	70.0	90.0
48"		55.0	70.0	70.0	90.0
51"		55.0	70.0	70.0	90.0
54"		55.0	70.0	70.0	90.0
57"		55.0	70.0	70.0	90.0
60"		55.0	70.0	70.0	90.0
63"		55.0	70.0	70.0	90.0
66"		55.0	70.0	70.0	90.0
69"		55.0	70.0	70.0	90.0
72"		55.0	70.0	70.0	90.0
36"	84"	55.0	70.0	70.0	90.0
39"		55.0	70.0	70.0	90.0
42"		55.0	70.0	70.0	90.0
45"		55.0	70.0	70.0	90.0
48"		55.0	70.0	70.0	90.0
51"		55.0	70.0	70.0	90.0
54"		55.0	70.0	70.0	90.0
57"		55.0	70.0	70.0	90.0
60"		55.0	70.0	70.0	90.0
63"		55.0	70.0	70.0	90.0
66"		55.0	70.0	70.0	90.0
36"	90"	55.0	70.0	70.0	90.0
39"		55.0	70.0	70.0	90.0
42"		55.0	70.0	70.0	90.0
45"		55.0	70.0	70.0	90.0
48"		55.0	70.0	70.0	90.0
51"		55.0	70.0	70.0	90.0
54"		55.0	70.0	70.0	90.0
57"		55.0	70.0	70.0	90.0
60"		55.0	70.0	70.0	90.0
63"		55.0	70.0	70.0	90.0

MULLION LOAD CAPACITY - PSF					
NOMINAL DIMS.		W/O STEEL REINF.		WITH STEEL REINF.	
WIDTH (W)	FRAME HEIGHT	EXT. (+)	INT. (−)	EXT. (+)	INT. (−)
36"	96"	55.0	70.0	70.0	90.0
39"		55.0	70.0	70.0	90.0
42"		55.0	70.0	70.0	90.0
45"		55.0	70.0	70.0	90.0
48"		55.0	70.0	70.0	90.0
51"		55.0	70.0	70.0	90.0
54"		55.0	70.0	70.0	90.0
57"		55.0	70.0	70.0	90.0
36"	102"	55.0	70.0	70.0	90.0
39"		55.0	70.0	70.0	90.0
42"		55.0	70.0	70.0	90.0
45"		55.0	70.0	70.0	90.0
48"		55.0	70.0	70.0	90.0
51"		55.0	70.0	70.0	90.0
54"		55.0	70.0	70.0	90.0
36"	108"	55.0	70.0	70.0	90.0
39"		55.0	70.0	70.0	90.0
42"		55.0	70.0	70.0	90.0
45"		55.0	70.0	70.0	90.0
48"		55.0	70.0	70.0	90.0
50"		55.0	70.0	70.0	90.0
36"	114"	55.0	70.0	70.0	90.0
39"		55.0	70.0	70.0	90.0
42"		55.0	70.0	70.0	90.0
45"		55.0	70.0	70.0	90.0
48"		55.0	70.0	70.0	90.0
51"		–	–	70.0	90.0
54"		–	–	70.0	90.0
57"		–	–	70.0	90.0
60"		–	–	70.0	90.0
63"		–	–	70.0	90.0
36"	120"	55.0	70.0	70.0	90.0
39"		55.0	70.0	70.0	90.0
42"		55.0	70.0	70.0	90.0
45"		55.0	66.7	70.0	90.0
48"		–	–	70.0	90.0
51"		–	–	70.0	90.0
54"		–	–	70.0	90.0
57"		–	–	70.0	90.0
60"		–	–	70.0	90.0
36"	126"	55.0	70.0	70.0	90.0
39"		52.2	66.5	70.0	90.0
42"		48.5	61.7	70.0	90.0
45"		45.3	57.6	70.0	90.0
48"		–	–	70.0	90.0
51"		–	–	70.0	90.0
54"		–	–	67.2	86.4
57"		–	–	63.7	81.8
36"	132"	49.2	62.6	70.0	90.0
39"		45.4	57.8	70.0	90.0
42"		42.2	53.7	70.0	90.0
45"		–	–	70.0	90.0
48"		–	–	65.7	84.5
51"		–	–	61.9	79.6
54"		–	–	58.4	75.1

MULLION LOAD CAPACITY - PSF					
NOMINAL DIMS.		W/O STEEL REINF.		WITH STEEL REINF.	
WIDTH (W)	FRAME HEIGHT	EXT. (+)	INT. (−)	EXT. (+)	INT. (−)
36"	138"	41.2	52.5	70.0	90.0
39"		38.1	48.5	70.0	90.0
42"		–	–	65.8	84.5
45"		–	–	61.4	78.9
48"		–	–	57.5	74.0
51"		–	–	54.1	69.6
36"	144"	–	–	67.5	86.8
39"		–	–	62.3	80.1
42"		–	–	57.9	74.4
45"		–	–	54.0	69.4
48"		–	–	50.6	65.1

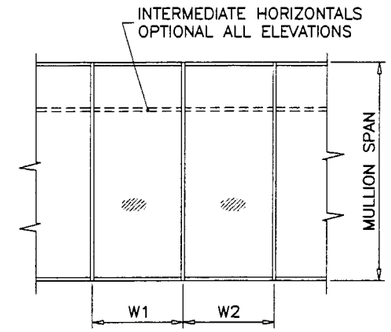

$$\text{WIDTH (W)} = \frac{W1 + W2}{2}$$

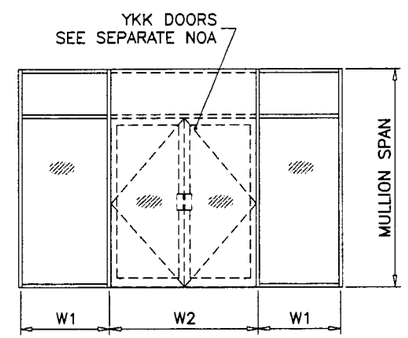

$$\text{WIDTH (W)} = \frac{W1 + W2}{2}$$

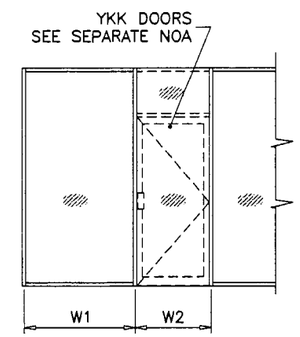

$$\text{WIDTH (W)} = \frac{W1 + W2}{2}$$

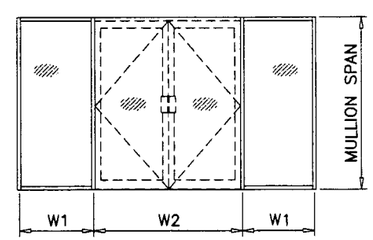

$$\text{WIDTH (W)} = \frac{W1}{2} + \frac{W2}{4}$$

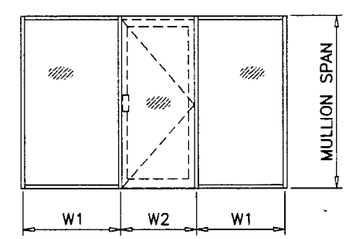

$$\text{WIDTH (W)} = \frac{W1 + W2}{2}$$

PRODUCT REVISED
as complying with the Florida Building Code
Acceptance No 02-0215.16
Expiration Date AUG 15, 2007
By Ishaq I. Chauck
Miami Dade Product Control Division

Engr: DR. HUMAYOUN FAROOQ
STRUCTURES
FLA. PE # 16557

JUL 2 6 2002

AL-FAROOQ CORPORATION
ENGINEERS, PLANNERS & PRODUCT DESIGN
1235 SW 87 AVE
MIAMI, FLORIDA 33174
TEL. (305) 264-8100 FAX. (305) 262-6978

STORE\W01-47YKK

YHS-50 ALUM FLUSH GLAZE STOREFRONT SYS. (L.M.)

YKK AP AMERICA INC.
5630 GWALTNEY DRIVE
ATLANTA, GA. 30336
TEL.(404) 629-3800 FAX(404) 629-3810

revisions:			
no	date	by	description

date: 07-25-01
scale: 1/2" = 1"
dr. by: HAMID
chk. by:

drawing no.
W01-47

GLASS DESIGN LOAD CAPACITY – PSF			
NOMINAL DIMS.		GLASS TYPE 'A1'	
D.L.O. WIDTH	D.L.O. HEIGHT	EXT. (+)	INT. (–)
13"	24"	46.0	60.0
19"		46.0	60.0
24"		46.0	60.0
30"		46.0	60.0
36"		46.0	60.0
42"		46.0	60.0
13"	30"	46.0	60.0
19"		46.0	60.0
24"		46.0	60.0
30"		46.0	60.0
13"	36"	46.0	60.0
19"		46.0	60.0
24"		46.0	60.0
13"	42"	46.0	60.0
19"		46.0	60.0
24"		46.0	60.0
13"	48"	46.0	60.0
19"		46.0	60.0
13"	54"	46.0	60.0
19"		46.0	60.0
13"	60"	46.0	60.0
13"	66"	46.0	60.0
13"	72"	46.0	60.0
13"	78"	46.0	60.0

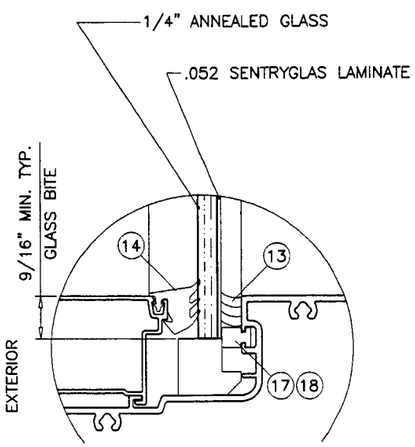

GLASS TYPE 'A1'

GLASS DESIGN LOAD CAPACITY – PSF			
NOMINAL DIMS.		GLASS TYPE 'A2'	
D.L.O. WIDTH	D.L.O. HEIGHT	EXT. (+)	INT. (–)
24"	24"	70.0	90.0
30"		70.0	90.0
36"		70.0	90.0
42"		70.0	90.0
48"		70.0	90.0
54"		70.0	90.0
60"		70.0	90.0
66"		70.0	90.0
72"		70.0	90.0
78"		70.0	90.0
84"		70.0	90.0
90"		70.0	90.0
96"		70.0	90.0
102"		70.0	90.0
108"		70.0	90.0
24"	30"	70.0	90.0
30"		70.0	90.0
36"		70.0	90.0
42"		70.0	90.0
48"		70.0	90.0
54"		70.0	90.0
60"		70.0	90.0
66"		70.0	90.0
72"		70.0	86.2
78"		70.0	81.6
84"		70.0	77.2
24"	36"	70.0	90.0
30"		70.0	90.0
36"		70.0	90.0
42"		70.0	90.0
48"		70.0	90.0
54"		70.0	90.0
60"		70.0	89.0
66"		70.0	81.6
72"		70.0	71.4
24"	42"	70.0	90.0
30"		70.0	90.0
36"		70.0	90.0
42"		70.0	90.0
48"		70.0	90.0
54"		70.0	90.0
60"		70.0	85.4
24"	48"	70.0	90.0
30"		70.0	90.0
36"		70.0	90.0
42"		70.0	90.0
48"		70.0	90.0
54"		70.0	85.8
24"	54"	70.0	90.0
30"		70.0	90.0
36"		70.0	90.0
42"		70.0	90.0
48"		70.0	85.8
24"	60"	70.0	90.0
30"		70.0	90.0
36"		70.0	89.0
42"		70.0	85.4

GLASS DESIGN LOAD CAPACITY – PSF			
NOMINAL DIMS.		GLASS TYPE 'A2'	
D.L.O. WIDTH	D.L.O. HEIGHT	EXT. (+)	INT. (–)
24"	66"	70.0	90.0
30"		70.0	90.0
36"		70.0	81.6
24"	72"	70.0	90.0
30"		70.0	86.2
36"		70.0	71.4
24"	78"	70.0	90.0
30"		70.0	81.6
24"	84"	70.0	90.0
30"		70.0	77.2
24"	90"	70.0	90.0
24"	96"	70.0	90.0
24"	102"	70.0	90.0
24"	108"	70.0	90.0

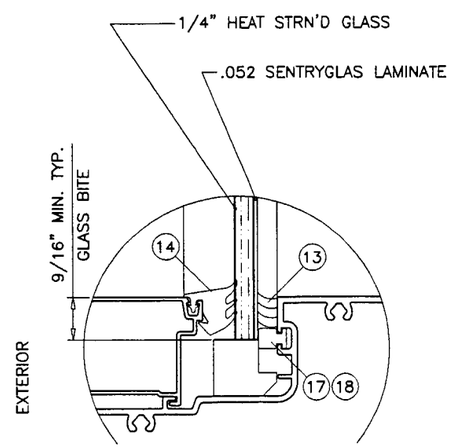

GLASS TYPE 'A2'

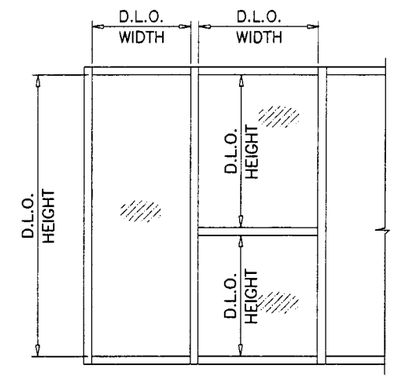

PRODUCT REVISED
as complying with the Florida Building Code
Acceptance No 02-0215.16
Expiration Date AUG 15, 2007
By Ishaq I. Chanda
Miami Dade Product Control Division

Engr: DR. HUMAYOUN FAROOQ
STRUCTURES
FLA. PE # 16557

JUL 2 6 2002

AL-FAROOQ CORPORATION
ENGINEERS, PLANNERS & PRODUCT DESIGN
1235 SW 87 AVE
MIAMI, FLORIDA 33174
TEL. (305) 264-8100 FAX. (305) 262-6978
STORE\W01-47YKK

YHS-50 ALUM FLUSH GLAZE STOREFRONT SYS. (L.M.)

YKK AP AMERICA INC.
5630 GWALTNEY DRIVE
ATLANTA, GA. 30336
TEL.(404) 629-3800 FAX(404) 629-3810

revisions:
no | date | by | description

date: 07-25-01
scale: 1/2" = 1"
dr. by: HAMID
chk. by:

drawing no.
W01-47

sheet 3 of 15

GLASS DESIGN LOAD CAPACITY - PSF			
NOMINAL DIMS.		GLASS TYPE 'A3'	
D.L.O. WIDTH	D.L.O. HEIGHT	EXT. (+)	INT. (−)
24"	36"	70.0	90.0
30"		70.0	90.0
36"		70.0	90.0
42"		70.0	90.0
48"		70.0	90.0
54"		70.0	90.0
60"		70.0	90.0
66"		70.0	90.0
72"		70.0	90.0
78"		70.0	90.0
84"		70.0	90.0
90"		70.0	90.0
96"		70.0	90.0
102"		70.0	90.0
108"		70.0	90.0
24"	42"	70.0	90.0
30"		70.0	90.0
36"		70.0	90.0
42"		70.0	90.0
48"		70.0	90.0
54"		70.0	90.0
60"		70.0	90.0
66"		70.0	90.0
72"		70.0	90.0
78"		70.0	90.0
84"		70.0	90.0
90"		70.0	90.0
96"		70.0	90.0
102"		70.0	90.0
108"		70.0	84.0
24"	48"	70.0	90.0
30"		70.0	90.0
36"		70.0	90.0
42"		70.0	90.0
48"		70.0	90.0
54"		70.0	90.0
60"		70.0	90.0
66"		70.0	90.0
72"		70.0	90.0
78"		70.0	90.0
84"		70.0	90.0
90"		70.0	90.0
96"		70.0	90.0
102"		70.0	85.2
108"		70.0	80.4
24"	54"	70.0	90.0
30"		70.0	90.0
36"		70.0	90.0
42"		70.0	90.0
48"		70.0	90.0
54"		70.0	90.0
60"		70.0	90.0
66"		70.0	90.0
72"		70.0	90.0
78"		70.0	90.0
84"		70.0	90.0
90"		70.0	90.0
96"		70.0	90.0
102"		70.0	88.0
108"		70.0	76.4

GLASS DESIGN LOAD CAPACITY - PSF			
NOMINAL DIMS.		GLASS TYPE 'A3'	
D.L.O. WIDTH	D.L.O. HEIGHT	EXT. (+)	INT. (−)
24"	60"	70.0	90.0
30"		70.0	90.0
36"		70.0	90.0
42"		70.0	90.0
48"		70.0	90.0
54"		70.0	90.0
60"		70.0	90.0
66"		70.0	90.0
72"		70.0	90.0
78"		70.0	90.0
84"		70.0	90.0
90"		70.0	89.6
96"		70.0	79.2
102"		70.0	70.8
108"		64.4	64.4
24"	66"	70.0	90.0
30"		70.0	90.0
36"		70.0	90.0
42"		70.0	90.0
48"		70.0	90.0
54"		70.0	90.0
60"		70.0	90.0
66"		70.0	90.0
72"		70.0	90.0
78"		70.0	90.0
84"		70.0	85.6
90"		70.0	74.0
96"		64.8	64.8
24"	72"	70.0	90.0
30"		70.0	90.0
36"		70.0	90.0
42"		70.0	90.0
48"		70.0	90.0
54"		70.0	90.0
60"		70.0	90.0
66"		70.0	90.0
72"		70.0	90.0
78"		70.0	86.4
84"		70.0	73.2
90"		62.8	62.8
24"	78"	70.0	90.0
30"		70.0	90.0
36"		70.0	90.0
42"		70.0	90.0
48"		70.0	90.0
54"		70.0	90.0
60"		70.0	90.0
66"		70.0	90.0
72"		70.0	86.4
78"		70.0	75.2
24"	84"	70.0	90.0
30"		70.0	90.0
36"		70.0	90.0
42"		70.0	90.0
48"		70.0	90.0
54"		70.0	90.0
60"		70.0	90.0
66"		70.0	85.6
72"		70.0	73.2

GLASS DESIGN LOAD CAPACITY - PSF			
NOMINAL DIMS.		GLASS TYPE 'A3'	
D.L.O. WIDTH	D.L.O. HEIGHT	EXT. (+)	INT. (−)
24"	90"	70.0	90.0
30"		70.0	90.0
36"		70.0	90.0
42"		70.0	90.0
48"		70.0	90.0
54"		70.0	90.0
60"		70.0	89.6
66"		70.0	74.0
72"		62.8	62.8
24"	96"	70.0	90.0
30"		70.0	90.0
36"		70.0	90.0
42"		70.0	90.0
48"		70.0	90.0
54"		70.0	90.0
60"		70.0	79.2
66"		64.8	64.8
24"	102"	70.0	90.0
30"		70.0	90.0
36"		70.0	90.0
42"		70.0	90.0
48"		70.0	85.2
54"		70.0	88.0
60"		70.0	70.8
24"	108"	70.0	90.0
30"		70.0	90.0
36"		70.0	90.0
42"		70.0	84.0
48"		70.0	80.4
54"		70.0	76.4
60"		64.4	64.4
24"	114"	70.0	90.0
30"		70.0	90.0
36"		70.0	90.0
42"		70.0	80.8
48"		70.0	76.4
54"		70.0	72.4
24"	114-3/8"	70.0	90.0
30"		70.0	90.0
36"		70.0	90.0
42"		70.0	80.4
48"		70.0	76.4
54"		70.0	72.0
57-1/2"		64.8	64.8
24"	120"	70.0	90.0
30"		70.0	90.0
36"		70.0	90.0
42"		70.0	77.2
48"		68.4	68.4
54"		68.8	68.8

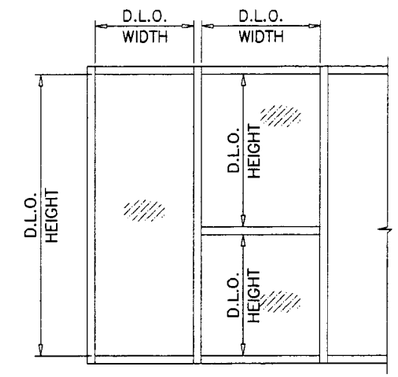

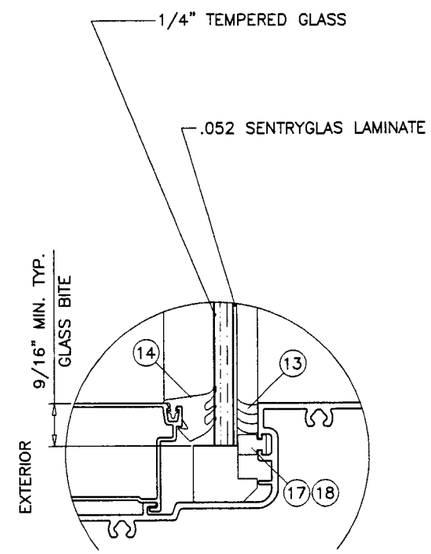

GLASS TYPE 'A3'

PRODUCT REVISED
as complying with the Florida Building Code
Acceptance No. 02-0215.16
Expiration Date AUG 15, 2007
By Ishaq I. Chanda
Miami Dade Product Control Division

Engr: DR. HUMAYOUN FAROOQ
STRUCTURES
FLA. PE # 16557

JUL 2 6 2002

AL-FAROOQ CORPORATION
ENGINEERS, PLANNERS & PRODUCT DESIGN
1235 SW 87 AVE
MIAMI, FLORIDA 33174
TEL. (305) 264-8100 FAX. (305) 262-6978
STORE\W01-47YKK

YKK AP AMERICA INC.
5630 GWALTNEY DRIVE
ATLANTA, GA. 30336
TEL.(404) 629-3800 FAX(404) 629-3810

YHS-50 ALUM FLUSH GLAZE STOREFRONT SYS. (L.M.)

revisions:			
no	date	by	description

date: 07-25-01
scale: 1/2" = 1"
dr. by: HAMID
chk. by:

drawing no.
W01-47

GLASS DESIGN LOAD CAPACITY - PSF			
NOMINAL DIMS.		GLASS TYPE 'B1'	
D.L.O. WIDTH	D.L.O. HEIGHT	EXT. (+)	INT. (-)
24"	24"	68.6	86.3
30"		68.6	86.3
36"		68.6	86.3
42"		68.6	86.3
48"		68.6	86.3
54"		68.6	86.3
60"		68.6	86.3
24"	30"	68.6	86.3
30"		68.6	86.3
36"		68.6	86.3
42"		68.6	86.3
48"		68.6	86.3
24"	36"	68.6	86.3
30"		68.6	86.3
36"		68.6	86.3
42"		68.6	86.3
24"	42"	68.6	86.3
30"		68.6	86.3
36"		68.6	86.3
24"	48"	68.6	86.3
30"		68.6	86.3
24"	54"	68.6	86.3
24"	60"	68.6	86.3

GLASS DESIGN LOAD CAPACITY - PSF			
NOMINAL DIMS.		GLASS TYPE 'B2'	
D.L.O. WIDTH	D.L.O. HEIGHT	EXT. (+)	INT. (-)
24"	24"	68.6	86.3
30"		68.6	86.3
36"		68.6	86.3
42"		68.6	86.3
48"		68.6	86.3
54"		68.6	86.3
60"		68.6	86.3
66"		68.6	86.3
72"		68.6	86.3
78"		68.6	86.3
84"		68.6	86.3
90"		68.6	86.3
96"		68.6	86.3
102"		68.6	86.3
108"		68.6	86.3
24"	30"	68.6	86.3
30"		68.6	86.3
36"		68.6	86.3
42"		68.6	86.3
48"		68.6	86.3
54"		68.6	86.3
60"		68.6	86.3
66"		68.6	86.3
72"		68.6	86.3
78"		68.6	86.3
84"		68.6	86.3
90"		68.6	86.3
96"		68.6	86.3
102"		68.6	86.3
108"		–	–
24"	36"	68.6	86.3
30"		68.6	86.3
36"		68.6	86.3
42"		68.6	86.3
48"		68.6	86.3
54"		68.6	86.3
60"		68.6	86.3
66"		68.6	86.3
72"		68.6	86.3
78"		68.6	86.3
84"		68.6	86.3
24"	42"	68.6	86.3
30"		68.6	86.3
36"		68.6	86.3
42"		68.6	86.3
48"		68.6	86.3
54"		68.6	86.3
60"		68.6	86.3
66"		68.6	86.3
72"		68.6	86.3
24"	48"	68.6	86.3
30"		68.6	86.3
36"		68.6	86.3
42"		68.6	86.3
48"		68.6	86.3
54"		68.6	86.3
60"		68.6	86.3
66"		68.6	86.3

GLASS DESIGN LOAD CAPACITY - PSF			
NOMINAL DIMS.		GLASS TYPE 'B2'	
D.L.O. WIDTH	D.L.O. HEIGHT	EXT. (+)	INT. (-)
24"	54"	68.6	86.3
30"		68.6	86.3
36"		68.6	86.3
42"		68.6	86.3
48"		68.6	86.3
54"		68.6	86.3
24"	60"	68.6	86.3
30"		68.6	86.3
36"		68.6	86.3
42"		68.6	86.3
48"		68.6	86.3
24"	66"	68.6	86.3
30"		68.6	86.3
36"		68.6	86.3
42"		68.6	86.3
48"		68.6	86.3
24"	72"	68.6	86.3
30"		68.6	86.3
36"		68.6	86.3
42"		68.6	86.3
24"	78"	68.6	86.3
30"		68.6	86.3
36"		68.6	86.3
24"	84"	68.6	86.3
30"		68.6	86.3
36"		68.6	86.3
24"	90"	68.6	86.3
30"		68.6	86.3
24"	96"	68.6	86.3
30"		68.6	86.3
24"	102"	68.6	86.3
30"		68.6	86.3
24"	108"	68.6	86.3

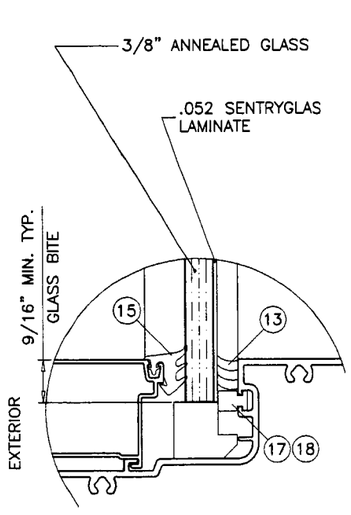

GLASS TYPE 'B1'

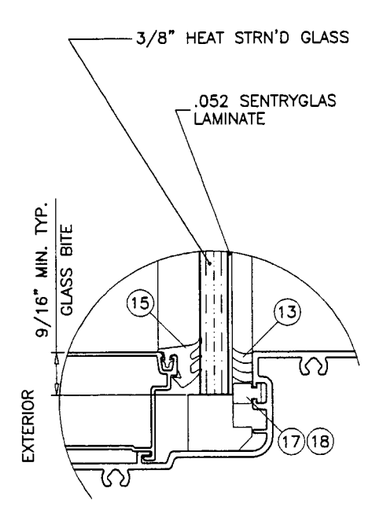

GLASS TYPE 'B2'

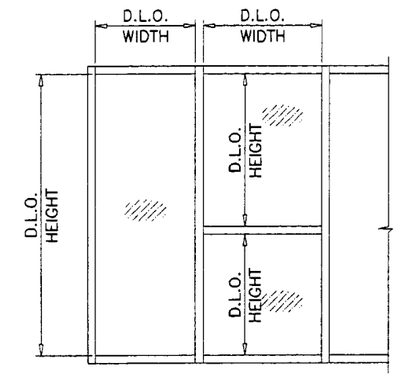

PRODUCT REVISED
as complying with the Florida Building Code
Acceptance No 02-0215.16
Expiration Date AUG 15, 2007
By Ishaq I. Chanda
Miami Dade Product Control Division

Engr: DR. HUMAYOUN FAROOQ
STRUCTURES
FLA. PE # 16557

JUL 26 2002

AL-FAROOQ CORPORATION
ENGINEERS, PLANNERS & PRODUCT DESIGN
1235 SW 87 AVE
MIAMI, FLORIDA 33174
TEL. (305) 264-8100 FAX. (305) 262-6978
STORE\W01-47YKK

YHS-50 ALUM FLUSH GLAZE STOREFRONT SYS. (L.M.)

YKK AP AMERICA INC.
5630 GWALTNEY DRIVE
ATLANTA, GA. 30336
TEL(404) 629-3800 FAX(404) 629-3810

revisions:			
no	date	by	description

date: 07-25-01
scale: 1/2" = 1"
dr. by: HAMID
chk. by:

drawing no.
W01-47

GLASS DESIGN LOAD CAPACITY - PSF			
NOMINAL DIMS.		GLASS TYPE 'B3'	
D.L.O. WIDTH	D.L.O. HEIGHT	EXT. (+)	INT. (-)
24"	24"	68.6	86.3
30"		68.6	86.3
36"		68.6	86.3
42"		68.6	86.3
48"		68.6	86.3
54"		68.6	86.3
60"		68.6	86.3
66"		68.6	86.3
72"		68.6	86.3
78"		68.6	86.3
84"		68.6	86.3
90"		68.6	86.3
96"		68.6	86.3
102"		68.6	86.3
108"		68.6	86.3
24"	30"	68.6	86.3
30"		68.6	86.3
36"		68.6	86.3
42"		68.6	86.3
46"		68.6	86.3
54"		68.6	86.3
60"		68.6	86.3
66"		68.6	86.3
72"		68.6	86.3
78"		68.6	86.3
84"		68.6	86.3
90"		68.6	86.3
96"		68.6	86.3
102"		68.6	86.3
108"		68.6	86.3
24"	36"	68.6	86.3
30"		68.6	86.3
36"		68.6	86.3
42"		68.6	86.3
48"		68.6	86.3
54"		68.6	86.3
60"		68.6	86.3
66"		68.6	86.3
72"		68.6	86.3
78"		68.6	86.3
84"		68.6	86.3
90"		68.6	86.3
96"		68.6	86.3
102"		68.6	86.3
108"		68.6	86.3
24"	42"	68.6	86.3
30"		68.6	86.3
36"		68.6	86.3
42"		68.6	86.3
48"		68.6	86.3
54"		68.6	86.3
60"		68.6	86.3
66"		68.6	86.3
72"		68.6	86.3
78"		68.6	86.3
84"		68.6	86.3
90"		68.6	86.3
96"		68.6	86.3
102"		68.6	86.3
108"		68.6	86.3

GLASS DESIGN LOAD CAPACITY - PSF			
NOMINAL DIMS.		GLASS TYPE 'B3'	
D.L.O. WIDTH	D.L.O. HEIGHT	EXT. (+)	INT. (-)
24"	48"	68.6	86.3
30"		68.6	86.3
36"		68.6	86.3
42"		68.6	86.3
48"		68.6	86.3
54"		68.6	86.3
60"		68.6	86.3
66"		68.6	86.3
72"		68.6	86.3
78"		68.6	86.3
84"		68.6	86.3
90"		68.6	86.3
96"		68.6	86.3
102"		68.6	86.3
108"		68.6	86.3
24"	54"	68.6	86.3
30"		68.6	86.3
36"		68.6	86.3
42"		68.6	86.3
48"		68.6	86.3
54"		68.6	86.3
60"		68.6	86.3
66"		68.6	86.3
72"		68.6	86.3
78"		68.6	86.3
84"		68.6	86.3
90"		68.6	86.3
96"		68.6	86.3
102"		68.6	86.3
108"		68.6	86.3
24"	60"	68.6	86.3
30"		68.6	86.3
36"		68.6	86.3
42"		68.6	86.3
48"		68.6	86.3
54"		68.6	86.3
60"		68.6	86.3
66"		68.6	86.3
72"		68.6	86.3
78"		68.6	86.3
84"		68.6	86.3
90"		68.6	86.3
96"		68.6	86.3
102"		68.6	86.3
108"		68.6	86.3
24"	66"	68.6	86.3
30"		68.6	86.3
36"		68.6	86.3
42"		68.6	86.3
48"		68.6	86.3
54"		68.6	86.3
60"		68.6	86.3
66"		68.6	86.3
72"		68.6	86.3
78"		68.6	86.3
84"		68.6	86.3
90"		68.6	86.3
96"		68.6	86.3

GLASS DESIGN LOAD CAPACITY - PSF			
NOMINAL DIMS.		GLASS TYPE 'B3'	
D.L.O. WIDTH	D.L.O. HEIGHT	EXT. (+)	INT. (-)
24"	72"	68.6	86.3
30"		68.6	86.3
36"		68.6	86.3
42"		68.6	86.3
48"		68.6	86.3
54"		68.6	86.3
60"		68.6	86.3
66"		68.6	86.3
72"		68.6	86.3
78"		68.6	86.3
84"		68.6	86.3
90"		68.6	86.3
24"	78"	68.6	86.3
30"		68.6	86.3
36"		68.6	86.3
42"		68.6	86.3
48"		68.6	86.3
54"		68.6	86.3
60"		68.6	86.3
66"		68.6	86.3
72"		68.6	86.3
78"		68.6	86.3
84"		68.6	86.3
24"	84"	68.6	86.3
30"		68.6	86.3
36"		68.6	86.3
42"		68.6	86.3
48"		68.6	86.3
54"		68.6	86.3
60"		68.6	86.3
66"		68.6	86.3
72"		68.6	86.3
78"		68.6	86.3
24"	90"	68.6	86.3
30"		68.6	86.3
36"		68.6	86.3
42"		68.6	86.3
48"		68.6	86.3
54"		68.6	86.3
60"		68.6	86.3
66"		68.6	86.3
72"		68.6	86.3
24"	96"	68.6	86.3
30"		68.6	86.3
36"		68.6	86.3
42"		68.6	86.3
48"		68.6	86.3
54"		68.6	86.3
60"		68.6	86.3
66"		68.6	86.3
24"	102"	68.6	86.3
30"		68.6	86.3
36"		68.6	86.3
42"		68.6	86.3
48"		68.6	86.3
54"		68.6	86.3
60"		68.6	86.3

GLASS DESIGN LOAD CAPACITY - PSF			
NOMINAL DIMS.		GLASS TYPE 'B3'	
D.L.O. WIDTH	D.L.O. HEIGHT	EXT. (+)	INT. (-)
24"	108"	68.6	86.3
30"		68.6	86.3
36"		68.6	86.3
42"		68.6	86.3
48"		68.6	86.3
54"		68.6	86.3
60"		68.6	86.3
24"	114-3/8"	68.6	86.3
30"		68.6	86.3
36"		68.6	86.3
42"		68.6	86.3
48"		68.6	86.3
54"		68.6	86.3
57-1/2"		68.6	86.3
24"	120"	68.6	86.3
30"		68.6	86.3
36"		68.6	86.3
42"		68.6	86.3
48"		68.6	86.3
54"		68.6	86.3

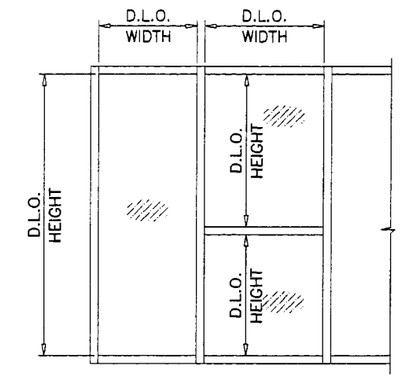

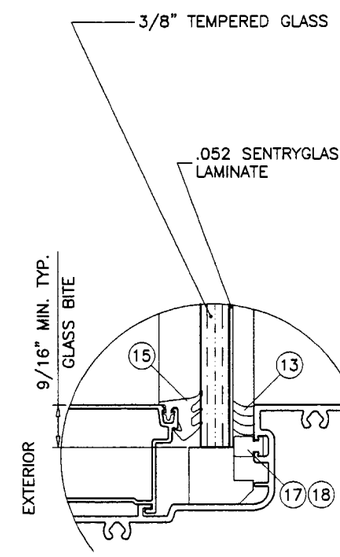

GLASS TYPE 'B3'

PRODUCT REVISED
as complying with the Florida Building Code
Acceptance No. 02-0215.16
Expiration Date Aug 15, 2007
By Ishaq I. Chanda
Miami Dade Product Control Division

Engr: DR. HUMAYOUN FAROOQ
STRUCTURES
FLA. PE # 16557

JUL 2 6 2002

AL-FAROOQ CORPORATION
ENGINEERS, PLANNERS & PRODUCT DESIGN
1235 SW 87 AVE
MIAMI, FLORIDA 33174
TEL. (305) 264-8100 FAX. (305) 262-6978
STORE\W01-47YKK

YHS-50 ALUM FLUSH GLAZE STOREFRONT SYS. (L.M.)

YKK AP America
YKK AP AMERICA INC.
5630 GWALTNEY DRIVE
ATLANTA, GA. 30336
TEL.(404) 629-3800 FAX(404) 629-3810

revisions:			
no	date	by	description

date: 07-25-01
scale: 1/2" = 1"
dr. by: HAMID
chk. by:

drawing no.
W01-47

GLASS DESIGN LOAD CAPACITY – PSF					
NOMINAL DIMS.		GLASS TYPE 'C1'		GLASS TYPE 'C2'	
D.L.O. WIDTH	D.L.O. HEIGHT	EXT. (+)	INT. (–)	EXT. (+)	INT. (–)
24"	24"	70.0	90.0	70.0	90.0
30"		70.0	90.0	70.0	90.0
36"		70.0	90.0	70.0	90.0
42"		70.0	90.0	70.0	90.0
48"		70.0	90.0	70.0	90.0
54"		70.0	90.0	70.0	90.0
60"		70.0	90.0	70.0	90.0
66"		70.0	90.0	70.0	90.0
72"		70.0	90.0	70.0	90.0
78"		70.0	90.0	70.0	90.0
84"		70.0	90.0	70.0	90.0
90"		70.0	90.0	70.0	90.0
96"		70.0	90.0	70.0	90.0
102"		70.0	90.0	70.0	90.0
108"		70.0	90.0	70.0	90.0
24"	30"	70.0	90.0	70.0	90.0
30"		70.0	90.0	70.0	90.0
36"		70.0	90.0	70.0	90.0
42"		70.0	90.0	70.0	90.0
48"		70.0	90.0	70.0	90.0
54"		70.0	90.0	70.0	90.0
60"		70.0	90.0	70.0	90.0
66"		70.0	89.2	70.0	90.0
72"		70.0	82.7	70.0	90.0
78"		70.0	81.0	70.0	90.0
84"		70.0	76.0	70.0	90.0
90"		55.0	70.0	70.0	90.0
96"		55.0	70.0	70.0	90.0
102"		55.0	70.0	70.0	90.0
108"		55.0	70.0	55.0	70.0
24"	36"	70.0	90.0	70.0	90.0
30"		70.0	90.0	70.0	90.0
36"		70.0	90.0	70.0	90.0
42"		70.0	90.0	70.0	90.0
48"		70.0	90.0	70.0	90.0
54"		70.0	81.7	70.0	90.0
60"		70.0	74.4	70.0	90.0
66"		68.2	68.2	70.0	90.0
72"		64.6	64.6	70.0	90.0
78"		55.0	59.5	70.0	90.0
84"		55.0	55.4	70.0	90.0
90"		55.0	55.2	55.0	70.0
96"		52.4	52.4	55.0	70.0
102"		50.2	50.2	55.0	70.0
108"		51.0	51.0	55.0	70.0
24"	42"	70.0	90.0	70.0	90.0
30"		70.0	90.0	70.0	90.0
36"		70.0	90.0	70.0	90.0
42"		70.0	90.0	70.0	90.0
48"		70.0	78.6	70.0	90.0
54"		69.6	69.6	70.0	90.0
60"		62.4	62.4	70.0	90.0
66"		55.0	56.8	70.0	90.0
72"		51.9	51.9	70.0	90.0
78"		48.1	48.1	55.0	70.0
84"		45.1	45.1	55.0	70.0
90"		42.7	42.7	55.0	70.0
96"		40.5	40.5	55.0	70.0
102"		38.6	38.6	55.0	70.0
108"		38.5	38.5	55.0	70.0

GLASS DESIGN LOAD CAPACITY – PSF					
NOMINAL DIMS.		GLASS TYPE 'C1'		GLASS TYPE 'C2'	
D.L.O. WIDTH	D.L.O. HEIGHT	EXT. (+)	INT. (–)	EXT. (+)	INT. (–)
24"	48"	70.0	90.0	70.0	90.0
30"		70.0	90.0	70.0	90.0
36"		70.0	90.0	70.0	90.0
42"		70.0	78.6	70.0	90.0
48"		68.4	68.4	70.0	90.0
54"		60.4	60.4	70.0	90.0
60"		54.1	54.1	70.0	90.0
66"		49.0	49.0	70.0	90.0
72"		45.1	45.1	55.0	70.0
78"		41.8	41.8	55.0	70.0
84"		39.2	39.2	55.0	70.0
90"		36.7	36.7	55.0	70.0
96"		34.3	34.3	55.0	68.7
102"		32.5	32.5	55.0	65.1
24"	54"	70.0	90.0	70.0	90.0
30"		70.0	90.0	70.0	90.0
36"		70.0	81.7	70.0	90.0
42"		69.6	69.6	70.0	90.0
48"		60.4	60.4	70.0	90.0
54"		53.2	53.2	70.0	90.0
60"		47.9	47.9	55.0	70.0
66"		43.6	43.6	55.0	70.0
72"		40.7	40.7	55.0	70.0
78"		37.9	37.9	55.0	70.0
84"		35.2	35.2	55.0	70.0
90"		32.9	32.9	55.0	65.8
24"	60"	70.0	90.0	70.0	90.0
30"		70.0	90.0	70.0	90.0
36"		70.0	74.4	70.0	90.0
42"		62.4	62.4	70.0	90.0
48"		54.1	54.1	70.0	90.0
54"		47.9	47.9	55.0	70.0
60"		51.8	51.8	55.0	70.0
66"		48.2	48.2	55.0	70.0
72"		44.7	44.7	55.0	70.0
78"		42.0	42.0	55.0	70.0
84"		39.4	39.4	55.0	70.0
24"	66"	70.0	90.0	70.0	90.0
30"		70.0	89.2	70.0	90.0
36"		68.2	68.2	70.0	90.0
42"		55.0	56.8	70.0	90.0
48"		49.0	49.0	70.0	90.0
54"		43.6	43.6	55.0	70.0
60"		48.2	48.2	55.0	70.0
66"		44.7	44.7	55.0	70.0
72"		41.8	41.8	55.0	70.0
78"		39.1	39.1	55.0	70.0
24"	72"	70.0	90.0	70.0	90.0
30"		70.0	82.7	70.0	90.0
36"		64.6	64.6	70.0	90.0
42"		51.9	51.9	70.0	90.0
48"		45.1	45.1	55.0	70.0
54"		40.7	40.7	55.0	70.0
60"		44.7	44.7	55.0	70.0
66"		41.8	41.8	55.0	70.0

GLASS DESIGN LOAD CAPACITY – PSF					
NOMINAL DIMS.		GLASS TYPE 'C1'		GLASS TYPE 'C2'	
D.L.O. WIDTH	D.L.O. HEIGHT	EXT. (+)	INT. (–)	EXT. (+)	INT. (–)
24"	78"	70.0	90.0	70.0	90.0
30"		70.0	81.0	70.0	90.0
36"		55.0	59.5	70.0	90.0
42"		48.1	48.1	55.0	70.0
48"		41.8	41.8	55.0	70.0
54"		37.9	37.9	55.0	70.0
60"		42.0	42.0	55.0	70.0
66"		39.1	39.1	55.0	70.0
24"	84"	70.0	90.0	70.0	90.0
30"		70.0	76.0	70.0	90.0
36"		55.0	55.4	70.0	90.0
42"		45.1	45.1	55.0	70.0
48"		39.2	39.2	55.0	70.0
54"		35.2	35.2	55.0	70.0
60"		39.4	39.4	55.0	70.0
24"	90"	70.0	90.0	70.0	90.0
30"		55.0	70.0	70.0	90.0
36"		55.0	55.2	55.0	70.0
42"		42.7	42.7	55.0	70.0
48"		36.7	36.7	55.0	70.0
54"		32.9	32.9	55.0	65.8
24"	96"	70.0	90.0	70.0	90.0
30"		55.0	70.0	70.0	90.0
36"		52.4	52.4	55.0	70.0
42"		40.5	40.5	55.0	70.0
48"		34.3	34.3	55.0	68.7
24"	102"	70.0	90.0	70.0	90.0
30"		55.0	69.9	70.0	90.0
36"		50.2	50.2	55.0	70.0
42"		38.6	38.6	55.0	70.0
48"		32.5	32.5	55.0	65.1
24"	108"	70.0	90.0	70.0	90.0
30"		55.0	70.0	55.0	70.0
36"		51.0	51.0	55.0	70.0
42"		38.5	38.5	55.0	70.0
47–1/2"	108–3/8"	–	–	55.0	62.8
24"	114–3/8"	–	–	70.0	90.0
30"		–	–	55.0	70.0
36"		–	–	55.0	70.0
42"		–	–	55.0	70.0

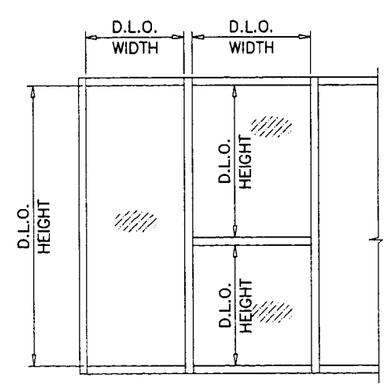

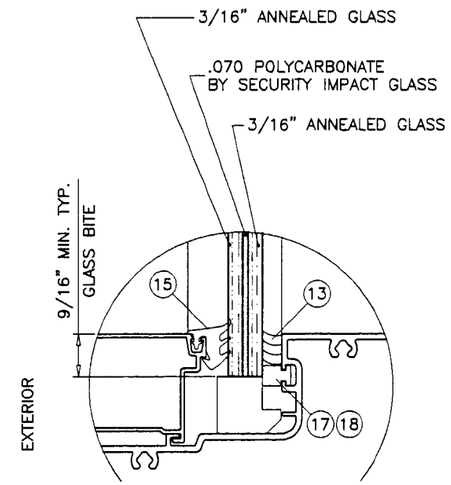

GLASS TYPE 'C1'
7/16" THICK NOMINAL

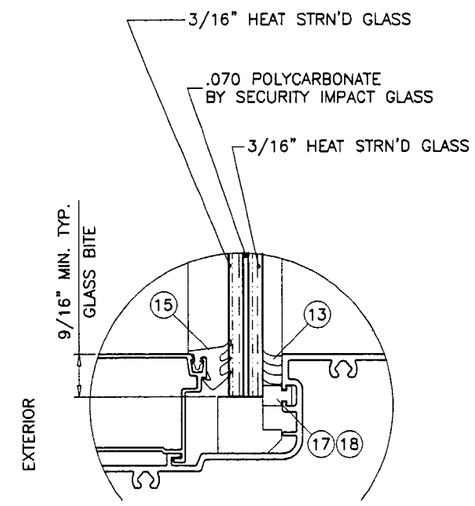

GLASS TYPE 'C2'
7/16" THICK NOMINAL

Engr: DR. HUMAYOUN FAROOQ
STRUCTURES
FLA. PE # 36557

JUL 2 6 2002

PRODUCT REVISED
as complying with the Florida Building Code
Acceptance No 02-0215.16
Expiration Date AUG 15, 2007
By Ishwar I. Chanda
Miami Dade Product Control Division

AL-FAROOQ CORPORATION
ENGINEERS, PLANNERS & PRODUCT DESIGN
1235 SW 87 AVE
MIAMI, FLORIDA 33174
TEL. (305) 264-8100 FAX. (305) 262-6978
STORE\W01-47YKK

YHS-50 ALUM FLUSH GLAZE STOREFRONT SYS. (L.M.)

YKK AP AMERICA INC.
5630 GWALTNEY DRIVE
ATLANTA, GA. 30336
TEL.(404) 629-3800 FAX(404) 629-3810

revisions:			
no	date	by	description

date: 07-25-01
scale: 1/2" = 1"
dr. by: HAMID
chk. by:

drawing no.
W01-47

GLASS DESIGN LOAD CAPACITY – PSF					
NOMINAL DIMS.		GLASS TYPE 'D1'		GLASS TYPE 'D2'	
D.L.O. WIDTH	D.L.O. HEIGHT	EXT. (+)	INT. (–)	EXT. (+)	INT. (–)
24"	24"	70.0	90.0	70.0	90.0
30"		70.0	90.0	70.0	90.0
36"		70.0	90.0	70.0	90.0
42"		70.0	90.0	70.0	90.0
48"		70.0	90.0	70.0	90.0
54"		70.0	90.0	70.0	90.0
60"		70.0	90.0	70.0	90.0
66"		70.0	90.0	70.0	90.0
72"		70.0	90.0	70.0	90.0
78"		70.0	90.0	70.0	90.0
84"		70.0	90.0	70.0	90.0
90"		70.0	90.0	70.0	90.0
96"		70.0	90.0	70.0	90.0
102"		70.0	90.0	70.0	90.0
108"		70.0	90.0	70.0	90.0
24"	30"	70.0	90.0	70.0	90.0
30"		70.0	90.0	70.0	90.0
36"		70.0	90.0	70.0	90.0
42"		70.0	90.0	70.0	90.0
48"		70.0	90.0	70.0	90.0
54"		70.0	90.0	70.0	90.0
60"		70.0	90.0	70.0	90.0
66"		70.0	90.0	70.0	90.0
72"		70.0	90.0	70.0	90.0
78"		70.0	90.0	70.0	90.0
84"		70.0	90.0	70.0	90.0
90"		70.0	90.0	70.0	90.0
96"		70.0	90.0	70.0	90.0
102"		70.0	90.0	70.0	90.0
108"		70.0	90.0	70.0	90.0
24"	36"	70.0	90.0	70.0	90.0
30"		70.0	90.0	70.0	90.0
36"		70.0	90.0	70.0	90.0
42"		70.0	90.0	70.0	90.0
48"		70.0	90.0	70.0	90.0
54"		70.0	90.0	70.0	90.0
60"		70.0	90.0	70.0	90.0
66"		70.0	90.0	70.0	90.0
72"		70.0	90.0	70.0	90.0
78"		70.0	90.0	70.0	90.0
84"		70.0	90.0	70.0	90.0
90"		70.0	90.0	70.0	90.0
96"		70.0	90.0	70.0	90.0
102"		70.0	90.0	70.0	90.0
108"		70.0	90.0	70.0	90.0
24"	42"	70.0	90.0	70.0	90.0
30"		70.0	90.0	70.0	90.0
36"		70.0	90.0	70.0	90.0
42"		70.0	90.0	70.0	90.0
48"		70.0	90.0	70.0	90.0
54"		70.0	90.0	70.0	90.0
60"		70.0	90.0	70.0	90.0
66"		70.0	90.0	70.0	90.0
72"		70.0	84.8	70.0	90.0
78"		70.0	78.2	70.0	90.0
84"		70.0	76.5	70.0	90.0
90"		70.0	72.0	70.0	90.0
96"		68.0	68.0	70.0	90.0
102"		64.5	64.5	70.0	90.0
108"		64.2	64.2	70.0	90.0

GLASS DESIGN LOAD CAPACITY – PSF					
NOMINAL DIMS.		GLASS TYPE 'D1'		GLASS TYPE 'D2'	
D.L.O. WIDTH	D.L.O. HEIGHT	EXT. (+)	INT. (–)	EXT. (+)	INT. (–)
24"	48"	70.0	90.0	70.0	90.0
30"		70.0	90.0	70.0	90.0
36"		70.0	90.0	70.0	90.0
42"		70.0	90.0	70.0	90.0
48"		70.0	90.0	70.0	90.0
54"		70.0	90.0	70.0	90.0
60"		70.0	86.8	70.0	90.0
66"		70.0	78.6	70.0	90.0
72"		70.0	71.3	70.0	90.0
78"		66.7	66.7	70.0	90.0
84"		62.4	62.4	70.0	90.0
90"		58.6	58.6	70.0	90.0
96"		56.9	56.9	70.0	90.0
102"		53.5	53.5	70.0	90.0
108"		50.5	50.5	70.0	90.0
24"	54"	70.0	90.0	70.0	90.0
30"		70.0	90.0	70.0	90.0
36"		70.0	90.0	70.0	90.0
42"		70.0	90.0	70.0	90.0
48"		70.0	90.0	70.0	90.0
54"		70.0	85.0	70.0	90.0
60"		70.0	76.5	70.0	90.0
66"		69.1	69.1	70.0	90.0
72"		63.3	63.3	70.0	90.0
78"		58.3	58.3	70.0	90.0
84"		54.4	54.4	70.0	90.0
90"		50.8	50.8	70.0	90.0
96"		47.8	47.8	70.0	90.0
102"		44.8	44.8	70.0	89.5
108"		42.8	42.8	70.0	85.6
24"	60"	70.0	90.0	70.0	90.0
30"		70.0	90.0	70.0	90.0
36"		70.0	90.0	70.0	90.0
42"		70.0	90.0	70.0	90.0
48"		70.0	86.8	70.0	90.0
54"		70.0	76.5	70.0	90.0
60"		68.5	68.5	70.0	90.0
66"		61.9	61.9	70.0	90.0
72"		56.8	56.8	70.0	90.0
78"		52.2	52.2	70.0	90.0
84"		48.3	48.3	70.0	90.0
90"		45.0	45.0	70.0	90.0
96"		42.1	42.1	70.0	84.3
102"		39.8	39.8	70.0	79.6
108"		37.6	37.6	70.0	75.3
24"	66"	70.0	90.0	70.0	90.0
30"		70.0	90.0	70.0	90.0
36"		70.0	90.0	70.0	90.0
42"		70.0	90.0	70.0	90.0
48"		70.0	78.6	70.0	90.0
54"		69.1	69.1	70.0	90.0
60"		61.9	61.9	70.0	90.0
66"		56.2	56.2	70.0	90.0
72"		51.3	51.3	70.0	90.0
78"		47.1	47.1	70.0	90.0
84"		43.4	43.4	70.0	86.8
90"		40.6	40.6	70.0	81.3
96"		38.2	38.2	70.0	76.3

GLASS DESIGN LOAD CAPACITY – PSF					
NOMINAL DIMS.		GLASS TYPE 'D1'		GLASS TYPE 'D2'	
D.L.O. WIDTH	D.L.O. HEIGHT	EXT. (+)	INT. (–)	EXT. (+)	INT. (–)
24"	72"	70.0	90.0	70.0	90.0
30"		70.0	90.0	70.0	90.0
36"		70.0	90.0	70.0	90.0
42"		70.0	84.8	70.0	90.0
48"		70.0	71.3	70.0	90.0
54"		63.3	63.3	70.0	90.0
60"		56.8	56.8	70.0	90.0
66"		51.3	51.3	70.0	90.0
72"		46.7	46.7	70.0	90.0
78"		42.7	42.7	70.0	85.5
84"		39.9	39.9	70.0	79.8
90"		37.3	37.3	70.0	74.7
24"	78"	70.0	90.0	70.0	90.0
30"		70.0	90.0	70.0	90.0
36"		70.0	90.0	70.0	90.0
42"		70.0	78.2	70.0	90.0
48"		66.7	66.7	70.0	90.0
54"		58.3	58.3	70.0	90.0
60"		52.2	52.2	70.0	90.0
66"		47.1	47.1	70.0	90.0
72"		42.7	42.7	70.0	85.5
78"		47.6	47.6	70.0	90.0
84"		44.3	44.3	70.0	88.6
24"	84"	70.0	90.0	70.0	90.0
30"		70.0	90.0	70.0	90.0
36"		70.0	90.0	70.0	90.0
42"		70.0	76.5	70.0	90.0
48"		62.4	62.4	70.0	90.0
54"		54.4	54.4	70.0	90.0
60"		48.3	48.3	70.0	90.0
66"		43.4	43.4	70.0	86.8
72"		39.9	39.9	70.0	79.8
78"		44.3	44.3	70.0	88.6
24"	90"	70.0	90.0	70.0	90.0
30"		70.0	90.0	70.0	90.0
36"		70.0	90.0	70.0	90.0
42"		70.0	72.0	70.0	90.0
48"		58.6	58.6	70.0	90.0
54"		50.8	50.8	70.0	90.0
60"		45.0	45.0	70.0	90.0
66"		40.6	40.6	70.0	81.3
72"		37.3	37.3	70.0	74.7
24"	96"	70.0	90.0	70.0	90.0
30"		70.0	90.0	70.0	90.0
36"		70.0	88.4	70.0	90.0
42"		68.0	68.0	70.0	90.0
48"		56.9	56.9	70.0	90.0
54"		47.8	47.8	70.0	90.0
60"		42.1	42.1	70.0	84.3
66"		38.2	38.2	70.0	76.3
24"	102"	70.0	90.0	70.0	90.0
30"		70.0	90.0	70.0	90.0
36"		70.0	84.4	70.0	90.0
42"		64.5	64.5	70.0	90.0
48"		53.5	53.5	70.0	90.0
54"		44.8	44.8	70.0	89.5
60"		39.8	39.8	70.0	79.6

GLASS DESIGN LOAD CAPACITY – PSF					
NOMINAL DIMS.		GLASS TYPE 'D1'		GLASS TYPE 'D2'	
D.L.O. WIDTH	D.L.O. HEIGHT	EXT. (+)	INT. (–)	EXT. (+)	INT. (–)
24"	108"	70.0	90.0	70.0	90.0
30"		70.0	90.0	70.0	90.0
36"		70.0	85.9	70.0	90.0
42"		64.2	64.2	70.0	90.0
48"		50.5	50.5	70.0	90.0
54"		42.8	42.8	70.0	85.6
60"		37.6	37.6	70.0	75.3
24"	114-3/8"	–	–	70.0	90.0
30"		–	–	70.0	90.0
36"		–	–	70.0	90.0
42"		–	–	70.0	90.0
48"		–	–	70.0	90.0
54"		–	–	70.0	81.6
57-1/2"		–	–	70.0	74.4

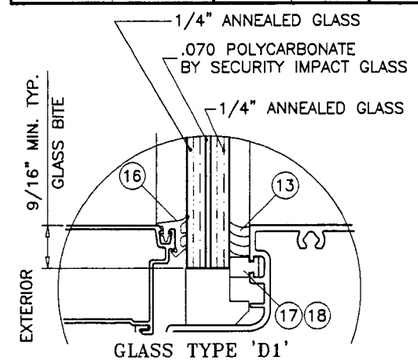

GLASS TYPE 'D1'
9/16" THICK NOMINAL

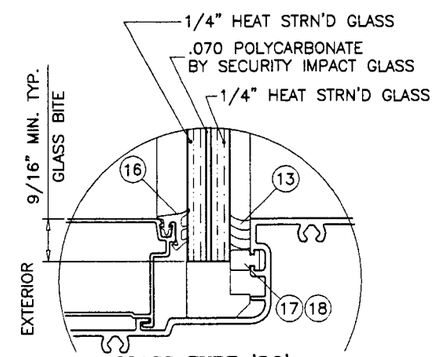

GLASS TYPE 'D2'
9/16" THICK NOMINAL

Engr: DR. HUMAYOUN FAROOQ
STRUCTURES
FLA. PE # 16557

JUL 2 6 2002

PRODUCT REVISED
in complying with the Florida Building Code
Acceptance No 02-0215.16
Expiration Date AUG 15, 2006
By Ishaq I. Chanda
Miami Dade Product Control Division

AL-FAROOQ CORPORATION
ENGINEERS, PLANNERS & PRODUCT DESIGN
1235 SW 87 AVE
MIAMI, FLORIDA 33174
TEL. (305) 264-8100 FAX. (305) 262-6978
STORE\W01-47YKK

YHS-50 ALUM FLUSH GLAZE STOREFRONT SYS. (L.M.)

YKK AP America

YKK AP AMERICA INC.
5630 GWALTNEY DRIVE
ATLANTA, GA. 30336
TEL(404) 629-3800 FAX(404) 629-3810

revisions:			
no	date	by	description

date: 07-25-01
scale: 1/2" = 1"
dr. by: HAMID
chk. by:

drawing no.
W01-47

GLASS DESIGN LOAD CAPACITY - PSF			
NOMINAL DIMS.		GLASS TYPE 'E'	
D.L.O. WIDTH	D.L.O. HEIGHT	EXT. (+)	INT. (-)
24"	24"	70.0	90.0
30"		70.0	90.0
36"		70.0	90.0
42"		70.0	90.0
48"		70.0	90.0
54"		70.0	90.0
57-1/2"		70.0	90.0
60"		70.0	90.0
66"		70.0	90.0
72"		70.0	90.0
78"		70.0	90.0
84"		70.0	90.0
90"		70.0	90.0
96"		70.0	90.0
102"		70.0	90.0
108"		70.0	90.0
24"	30"	70.0	90.0
30"		70.0	90.0
36"		70.0	90.0
42"		70.0	90.0
48"		70.0	90.0
54"		70.0	90.0
57-1/2"		70.0	90.0
60"		70.0	90.0
66"		70.0	90.0
72"		70.0	90.0
78"		70.0	90.0
84"		70.0	90.0
90"		70.0	90.0
96"		70.0	90.0
102"		70.0	90.0
108"		70.0	90.0
24"	36"	70.0	90.0
30"		70.0	90.0
36"		70.0	90.0
42"		70.0	90.0
48"		70.0	90.0
54"		70.0	90.0
57-1/2"		70.0	90.0
60"		70.0	90.0
66"		70.0	90.0
72"		70.0	90.0
78"		70.0	90.0
84"		70.0	90.0
90"		70.0	90.0
96"		70.0	90.0
102"		70.0	90.0
108"		70.0	90.0

GLASS DESIGN LOAD CAPACITY - PSF			
NOMINAL DIMS.		GLASS TYPE 'E'	
D.L.O. WIDTH	D.L.O. HEIGHT	EXT. (+)	INT. (-)
24"	42"	70.0	90.0
30"		70.0	90.0
36"		70.0	90.0
42"		70.0	90.0
48"		70.0	90.0
54"		70.0	90.0
57-1/2"		70.0	90.0
60"		70.0	90.0
66"		70.0	90.0
72"		70.0	90.0
78"		70.0	90.0
84"		70.0	90.0
90"		70.0	90.0
96"		70.0	90.0
102"		70.0	90.0
108"		70.0	90.0
24"	48"	70.0	90.0
30"		70.0	90.0
36"		70.0	90.0
42"		70.0	90.0
48"		70.0	90.0
54"		70.0	90.0
57-1/2"		70.0	90.0
60"		70.0	90.0
66"		70.0	90.0
72"		70.0	90.0
78"		70.0	90.0
84"		70.0	90.0
90"		70.0	90.0
96"		70.0	90.0
102"		70.0	90.0
108"		70.0	90.0
24"	54"	70.0	90.0
30"		70.0	90.0
36"		70.0	90.0
42"		70.0	90.0
48"		70.0	90.0
54"		70.0	90.0
57-1/2"		70.0	90.0
60"		70.0	90.0
66"		70.0	90.0
72"		70.0	90.0
78"		70.0	90.0
84"		70.0	90.0
90"		70.0	90.0
96"		70.0	90.0
102"		70.0	89.5
108"		70.0	85.6

GLASS DESIGN LOAD CAPACITY - PSF			
NOMINAL DIMS.		GLASS TYPE 'E'	
D.L.O. WIDTH	D.L.O. HEIGHT	EXT. (+)	INT. (-)
24"	60"	70.0	90.0
30"		70.0	90.0
36"		70.0	90.0
42"		70.0	90.0
48"		70.0	90.0
54"		70.0	90.0
57-1/2"		70.0	90.0
60"		70.0	90.0
66"		70.0	90.0
72"		70.0	90.0
78"		70.0	90.0
84"		70.0	90.0
90"		70.0	90.0
96"		70.0	84.3
102"		70.0	79.6
108"		70.0	75.3
24"	66"	70.0	90.0
30"		70.0	90.0
36"		70.0	90.0
42"		70.0	90.0
48"		70.0	90.0
54"		70.0	90.0
57-1/2"		70.0	90.0
60"		70.0	90.0
66"		70.0	90.0
72"		70.0	90.0
78"		70.0	90.0
84"		70.0	86.8
90"		70.0	81.3
96"		70.0	76.3
24"	72"	70.0	90.0
30"		70.0	90.0
36"		70.0	90.0
42"		70.0	90.0
48"		70.0	90.0
54"		70.0	90.0
57-1/2"		70.0	90.0
60"		70.0	90.0
66"		70.0	90.0
72"		70.0	90.0
78"		70.0	85.5
84"		70.0	79.8
90"		70.0	74.7
24"	78"	70.0	90.0
30"		70.0	90.0
36"		70.0	90.0
42"		70.0	90.0
48"		70.0	90.0
54"		70.0	90.0
57-1/2"		70.0	90.0
60"		70.0	90.0
66"		70.0	90.0
72"		70.0	85.5
78"		70.0	90.0
84"		70.0	88.6

GLASS DESIGN LOAD CAPACITY - PSF			
NOMINAL DIMS.		GLASS TYPE 'E'	
D.L.O. WIDTH	D.L.O. HEIGHT	EXT. (+)	INT. (-)
24"	84"	70.0	90.0
30"		70.0	90.0
36"		70.0	90.0
42"		70.0	90.0
48"		70.0	90.0
54"		70.0	90.0
57-1/2"		70.0	90.0
60"		70.0	90.0
66"		70.0	86.8
72"		70.0	79.8
78"		70.0	88.6
24"	90"	70.0	90.0
30"		70.0	90.0
36"		70.0	90.0
42"		70.0	90.0
48"		70.0	90.0
54"		70.0	90.0
57-1/2"		70.0	90.0
60"		70.0	90.0
66"		70.0	81.3
72"		70.0	74.7
24"	96"	70.0	90.0
30"		70.0	90.0
36"		70.0	90.0
42"		70.0	90.0
48"		70.0	90.0
54"		70.0	90.0
57-1/2"		70.0	88.5
60"		70.0	84.3
66"		70.0	76.3
24"	102"	70.0	90.0
30"		70.0	90.0
36"		70.0	90.0
42"		70.0	90.0
48"		70.0	90.0
54"		70.0	89.5
57-1/2"		70.0	83.2
60"		70.0	79.6
24"	108"	70.0	90.0
30"		70.0	90.0
36"		70.0	90.0
42"		70.0	90.0
48"		70.0	90.0
54"		70.0	85.6
57-1/2"		70.0	78.9
60"		70.0	75.3
24"	114-3/8"	70.0	90.0
30"		70.0	90.0
36"		70.0	90.0
42"		70.0	90.0
48"		70.0	90.0
54"		70.0	81.6
57-1/2"		70.0	74.4

PRODUCT REVISED
in complying with the Florida Building Code
Acceptance No. 02-0215.16
Expiration Date AUG 15, 2007
By Ishwar J. Chanda
Miami Dade Product Control Division

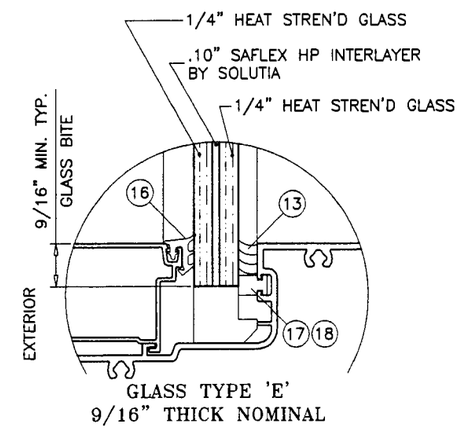

GLASS TYPE 'E'
9/16" THICK NOMINAL

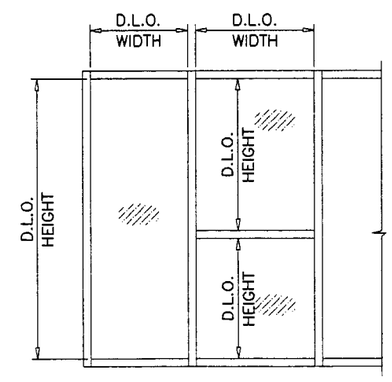

Engr: DR. HUMAYOUN FAROOQ
STRUCTURES
FLA. PE # 16557

JUL 26 2002

AL-FAROOQ CORPORATION
ENGINEERS, PLANNERS & PRODUCT DESIGN
1235 SW 87 AVE
MIAMI, FLORIDA 33174
TEL. (305) 264-8100 FAX. (305) 262-6978
STORE\W01-47YKK

YHS-50 ALUM FLUSH GLAZE STOREFRONT SYS. (L.M.)

YKK AP AMERICA INC.
5630 GWALTNEY DRIVE
ATLANTA, GA. 30336
TEL.(404) 629-3800 FAX(404) 629-3810

revisions:

no	date	by	description

date: 07-25-01
scale: 1/2" = 1"
dr. by: HAMID
chk. by:

drawing no.
W01-47

sheet 9 of 15

GLASS DESIGN LOAD CAPACITY - PSF			
NOMINAL DIMS.		GLASS TYPE 'F'	
D.L.O. WIDTH	D.L.O. HEIGHT	EXT. (+)	INT. (-)
24"	24"	65.0	65.0
30"		65.0	65.0
36"		65.0	65.0
42"		65.0	65.0
48"		65.0	65.0
54"		65.0	65.0
57-1/2"		65.0	65.0
60"		65.0	65.0
66"		65.0	65.0
72"		65.0	65.0
78"		65.0	65.0
84"		65.0	65.0
90"		65.0	65.0
96"		65.0	65.0
102"		65.0	65.0
108"		65.0	65.0
24"	30"	65.0	65.0
30"		65.0	65.0
36"		65.0	65.0
42"		65.0	65.0
48"		65.0	65.0
54"		65.0	65.0
57-1/2"		65.0	65.0
60"		65.0	65.0
66"		65.0	65.0
72"		65.0	65.0
78"		65.0	65.0
84"		65.0	65.0
90"		65.0	65.0
96"		65.0	65.0
102"		65.0	65.0
108"		65.0	65.0
24"	36"	65.0	65.0
30"		65.0	65.0
36"		65.0	65.0
42"		65.0	65.0
48"		65.0	65.0
54"		65.0	65.0
57-1/2"		65.0	65.0
60"		65.0	65.0
66"		65.0	65.0
72"		65.0	65.0
78"		65.0	65.0
84"		65.0	65.0
90"		65.0	65.0
96"		65.0	65.0
102"		65.0	65.0
108"		65.0	65.0

GLASS DESIGN LOAD CAPACITY - PSF			
NOMINAL DIMS.		GLASS TYPE 'F'	
D.L.O. WIDTH	D.L.O. HEIGHT	EXT. (+)	INT. (-)
24"	42"	65.0	65.0
30"		65.0	65.0
36"		65.0	65.0
42"		65.0	65.0
48"		65.0	65.0
54"		65.0	65.0
57-1/2"		65.0	65.0
60"		65.0	65.0
66"		65.0	65.0
72"		65.0	65.0
78"		65.0	65.0
84"		65.0	65.0
90"		65.0	65.0
96"		65.0	65.0
102"		65.0	65.0
108"		65.0	65.0
24"	48"	65.0	65.0
30"		65.0	65.0
36"		65.0	65.0
42"		65.0	65.0
48"		65.0	65.0
54"		65.0	65.0
57-1/2"		65.0	65.0
60"		65.0	65.0
66"		65.0	65.0
72"		65.0	65.0
78"		65.0	65.0
84"		65.0	65.0
90"		65.0	65.0
96"		65.0	65.0
24"	54"	65.0	65.0
30"		65.0	65.0
36"		65.0	65.0
42"		65.0	65.0
48"		65.0	65.0
54"		65.0	65.0
57-1/2"		65.0	65.0
60"		65.0	65.0
66"		65.0	65.0
72"		65.0	65.0
78"		65.0	65.0
84"		65.0	65.0
24"	60"	65.0	65.0
30"		65.0	65.0
36"		65.0	65.0
42"		65.0	65.0
48"		65.0	65.0
54"		65.0	65.0
57-1/2"		65.0	65.0
60"		65.0	65.0
66"		65.0	65.0
72"		65.0	65.0

GLASS DESIGN LOAD CAPACITY - PSF			
NOMINAL DIMS.		GLASS TYPE 'F'	
D.L.O. WIDTH	D.L.O. HEIGHT	EXT. (+)	INT. (-)
24"	66"	65.0	65.0
30"		65.0	65.0
36"		65.0	65.0
42"		65.0	65.0
48"		65.0	65.0
54"		65.0	65.0
57-1/2"		65.0	65.0
60"		65.0	65.0
66"		65.0	65.0
24"	72"	65.0	65.0
30"		65.0	65.0
36"		65.0	65.0
42"		65.0	65.0
48"		65.0	65.0
54"		65.0	65.0
57-1/2"		65.0	65.0
60"		65.0	65.0
24"	78"	65.0	65.0
30"		65.0	65.0
36"		65.0	65.0
42"		65.0	65.0
48"		65.0	65.0
54"		65.0	65.0
57-1/2"		65.0	65.0
24"	80-7/8"	65.0	65.0
30"		65.0	65.0
36"		65.0	65.0
42"		65.0	65.0
48"		65.0	65.0
54"		65.0	65.0
57-1/2"		65.0	65.0
24"	84"	65.0	65.0
30"		65.0	65.0
36"		65.0	65.0
42"		65.0	65.0
48"		65.0	65.0
54"		65.0	65.0
24"	90"	65.0	65.0
30"		65.0	65.0
36"		65.0	65.0
42"		65.0	65.0
48"		65.0	65.0
24"	96"	65.0	65.0
30"		65.0	65.0
36"		65.0	65.0
42"		65.0	65.0
48"		65.0	65.0
24"	102"	65.0	65.0
30"		65.0	65.0
36"		65.0	65.0
42"		65.0	65.0
24"	108"	65.0	65.0
30"		65.0	65.0
36"		65.0	65.0
42"		65.0	65.0

PRODUCT REVISED
as complying with the Florida Building Code
Acceptance No 02-0215.16
Expiration Date AUG 15, 2007
By Isuag L. Chunda
Miami Dade Product Control Division

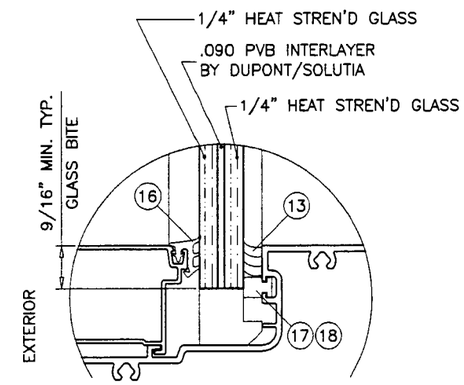

GLASS TYPE 'F'
9/16" THICK NOMINAL

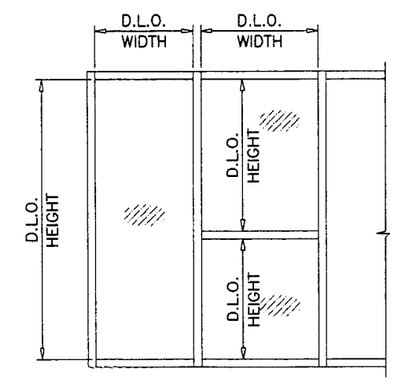

Engr: DR. HUMAYOUN FAROOQ
STRUCTURES
FLA. PE # 13557

JUL 2 8 2002

AL-FAROOQ CORPORATION
ENGINEERS, PLANNERS & PRODUCT DESIGN
1235 SW 87 AVE
MIAMI, FLORIDA 33174
TEL. (305) 264-8100 FAX. (305) 262-6978
STORE\W01-47YKK

YHS-50 ALUM FLUSH GLAZE STOREFRONT SYS. (L.M.)

YKK AP AMERICA INC.
5630 GWALTNEY DRIVE
ATLANTA, GA. 30336
TEL(404) 629-3800 FAX(404) 629-3810

revisions:			
no	date	by	description

date: 07-25-01
scale: 1/2" = 1"
dr. by: HAMID
chk. by:

drawing no.
W01-47

NOMINAL DIMS.		ANCHOR DESIGN LOAD CAPACITY – PSF EXTERIOR (+) AND INTERIOR (–)			
		OPTION #1		OPTION #2	
WIDTH (W)	FRAME HEIGHT	ANCHOR 'A'	ANCHOR 'B & F'	ANCHOR 'C' & 'E'	ANCHOR 'D'
36"	72"	90.0	90.0	90.0	90.0
39"		90.0	90.0	90.0	90.0
42"		90.0	90.0	90.0	90.0
45"		90.0	90.0	90.0	90.0
48"		90.0	90.0	90.0	90.0
51"		90.0	90.0	90.0	90.0
54"		90.0	90.0	90.0	90.0
57"		90.0	90.0	90.0	90.0
60"		90.0	90.0	90.0	90.0
63"		88.0	90.0	90.0	90.0
66"		84.0	90.0	90.0	90.0
69"		80.0	90.0	90.0	90.0
72"		77.0	90.0	90.0	90.0
75"		74.0	90.0	90.0	90.0
36"	78"	90.0	90.0	90.0	90.0
39"		90.0	90.0	90.0	90.0
42"		90.0	90.0	90.0	90.0
45"		90.0	90.0	90.0	90.0
48"		90.0	90.0	90.0	90.0
51"		90.0	90.0	90.0	90.0
54"		90.0	90.0	90.0	90.0
57"		90.0	90.0	90.0	90.0
60"		89.0	90.0	90.0	90.0
63"		85.0	90.0	90.0	90.0
66"		77.0	90.0	90.0	90.0
69"		74.0	90.0	90.0	90.0
72"		71.0	90.0	90.0	90.0
36"	84"	90.0	90.0	90.0	90.0
39"		90.0	90.0	90.0	90.0
42"		90.0	90.0	90.0	90.0
45"		90.0	90.0	90.0	90.0
48"		90.0	90.0	90.0	90.0
51"		90.0	90.0	90.0	90.0
54"		88.0	90.0	90.0	90.0
57"		83.0	90.0	90.0	90.0
60"		79.0	90.0	90.0	90.0
63"		75.0	90.0	90.0	90.0
66"		72.0	90.0	90.0	90.0
36"	90"	90.0	90.0	90.0	90.0
39"		90.0	90.0	90.0	90.0
42"		90.0	90.0	90.0	90.0
45"		90.0	90.0	90.0	90.0
48"		90.0	90.0	90.0	90.0
51"		87.0	90.0	90.0	90.0
54"		82.0	90.0	90.0	90.0
57"		77.0	90.0	90.0	90.0
60"		74.0	90.0	90.0	90.0
63"		70.0	90.0	90.0	90.0

NOMINAL DIMS.		ANCHOR DESIGN LOAD CAPACITY – PSF EXTERIOR (+) AND INTERIOR (–)			
		OPTION #1		OPTION #2	
WIDTH (W)	FRAME HEIGHT	ANCHOR 'A'	ANCHOR 'B & F'	ANCHOR 'C' & 'E'	ANCHOR 'D'
36"	96"	90.0	90.0	90.0	90.0
39"		90.0	90.0	90.0	90.0
42"		90.0	90.0	90.0	90.0
45"		90.0	90.0	90.0	90.0
48"		86.0	90.0	90.0	90.0
51"		81.0	90.0	90.0	90.0
54"		77.0	90.0	90.0	90.0
57"		73.0	90.0	90.0	90.0
36"	102"	90.0	90.0	90.0	90.0
39"		90.0	90.0	90.0	90.0
42"		90.0	90.0	90.0	90.0
45"		87.0	90.0	90.0	90.0
48"		81.0	90.0	90.0	90.0
51"		76.0	90.0	90.0	90.0
54"		72.0	90.0	90.0	90.0
36"	108"	90.0	90.0	90.0	90.0
39"		90.0	90.0	90.0	90.0
42"		88.0	90.0	90.0	90.0
45"		82.0	90.0	90.0	90.0
48"		77.0	90.0	90.0	90.0
36"	114"	90.0	90.0	90.0	90.0
39"		89.0	90.0	90.0	90.0
42"		83.0	90.0	90.0	90.0
45"		77.0	90.0	90.0	90.0
48"		73.0	90.0	90.0	90.0
51"		68.0	90.0	90.0	90.0
54"		65.0	90.0	90.0	90.0
57"		61.0	90.0	90.0	90.0
60"		58.0	89.0	90.0	90.0
63"		55.0	85.0	90.0	90.0
36"	120"	90.0	90.0	90.0	90.0
39"		85.0	90.0	90.0	90.0
42"		79.0	90.0	90.0	90.0
45"		74.0	90.0	90.0	90.0
48"		69.0	90.0	90.0	90.0
51"		65.0	90.0	90.0	90.0
54"		61.0	90.0	90.0	90.0
57"		58.0	89.0	90.0	90.0
60"		55.0	84.0	90.0	90.0
36"	126"	88.0	90.0	90.0	90.0
39"		81.0	90.0	90.0	90.0
42"		75.0	90.0	90.0	90.0
45"		70.0	90.0	90.0	90.0
48"		66.0	90.0	90.0	90.0
51"		62.0	90.0	90.0	90.0
54"		58.0	89.0	90.0	90.0
57"		55.0	85.0	90.0	90.0
36"	132"	84.0	90.0	90.0	90.0
39"		77.0	90.0	90.0	90.0
42"		72.0	90.0	90.0	90.0
45"		67.0	90.0	90.0	90.0
48"		63.0	90.0	90.0	90.0
51"		59.0	90.0	90.0	90.0
54"		56.0	85.0	90.0	90.0

NOMINAL DIMS.		ANCHOR DESIGN LOAD CAPACITY – PSF EXTERIOR (+) AND INTERIOR (–)			
		OPTION #1		OPTION #2	
WIDTH (W)	FRAME HEIGHT	ANCHOR 'A'	ANCHOR 'B & F'	ANCHOR 'C' & 'E'	ANCHOR 'D'
36"	138"	80.0	90.0	90.	90.0
39"		74.0	90.0	90.	90.0
42"		69.0	90.0	90.	90.0
45"		64.0	90.0	90.	90.0
48"		60.0	90.0	90.	90.0
51"		56.0	86.0	90.	90.0
36"	144"	77.0	90.0	90.	90.0
39"		71.0	90.0	90.	90.0
42"		66.0	90.0	90.	90.0
45"		61.0	90.0	90.	90.0
48"		58.0	88.0	90.	90.0

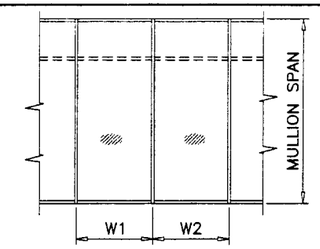

WIDTH (W) = $\frac{W1 + W2}{2}$

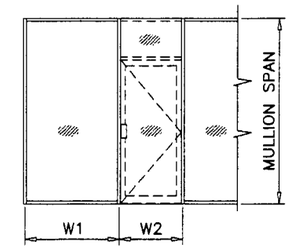

WIDTH (W) = $\frac{W1 + W2}{2}$

PRODUCT REVISED
as complying with the Florida Building Code
Acceptance No. 02-0215.16
Expiration Date 04/15/2007
By Ishay I. Chanta
Miami Dade Product Control Division

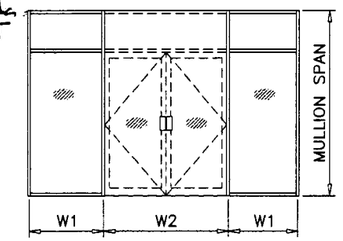

WIDTH (W) = $\frac{W1 + W2}{2}$

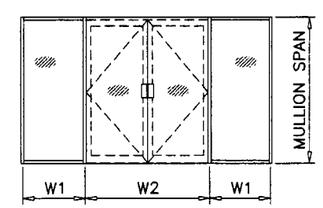

WIDTH (W) = $\frac{W1}{2} + \frac{W2}{4}$

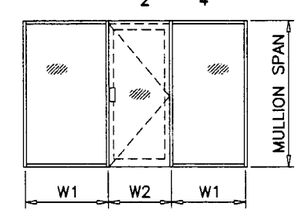

WIDTH (W) = $\frac{W1 + W2}{2}$

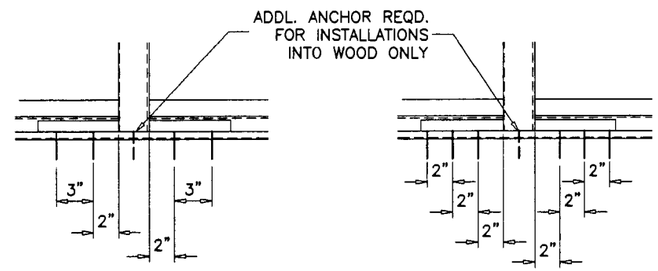

OPTION #1
(2) ANCHORS
AT EACH SIDE OF MULLION
TYPES A, B OR F

OPTION #2
(3) ANCHORS
AT EACH SIDE OF MULLION
TYPES C, D OR E

TOTAL NUMBER OF ANCHORS AT MULLION ENDS

ANCHOR TYPE	ANCHOR DESCRIPTION	SUBSTRATE	OPTION #1 NO. OF ANCHORS HEAD	OPTION #1 NO. OF ANCHORS SILL	OPTION #2 NO. OF ANCHORS HEAD	OPTION #2 NO. OF ANCHORS SILL
A	1/4" TAPPERS	WOOD STRUCTURE	4	4	X	X
		THRU 1BY OR 2BY BUCKS INTO CONC.	5	5	X	X
B	1/4" TAPPERS	DIRECTLY INTO CONCRETE	4	4	X	X
C	3/8" TAPPERS	WOOD STRUCTURE	X	X	6	7
		THRU 1BY OR 2BY BUCKS INTO CONC.	X	X	6	6
D	3/8" TAPPERS	DIRECTLY INTO CONCRETE	X	X	6	6
E	3/8" LAGS OR #24 WOOD SCREWS	WOOD STRUCTURE	X	X	6	7
F	#14 SMS OR KWIK–FLEX SELF DRILLING SCREWS	METAL STRUCTURES STL. OR ALUM 1/8" MIN. THK.	4	4	X	X

ALL ANCHORS CAN BE USED AT JAMBS INTO CONCRETE, MASONRY OR WOOD STRUCTURES, SEE SHEET 1 FOR SPACING AND SHEET 12 FOR ANCHOR DESCRIPTIONS.

Engr: DR. HUMAYOUN FAROOQ
STRUCTURES
FLA. PE # 16557

JUL 9 6 2002

AL-FAROOQ CORPORATION
ENGINEERS, PLANNERS & PRODUCT DESIGN
1235 SW 87 AVE
MIAMI, FLORIDA 33174
TEL. (305) 264-8100 FAX. (305) 262-6978
STORE\W01-47YKK

YHS-50 ALUM FLUSH GLAZE STOREFRONT SYS. (L.M.)

YKK AP AMERICA INC.
5630 GWALTNEY DRIVE
ATLANTA, GA. 30336
TEL(404) 629-3800 FAX(404) 629-3810

revisions:			
no	date	by	description

date: 07-25-01
scale: 1/2" = 1"
dr. by: HAMID
chk. by:

drawing no.
W01-47

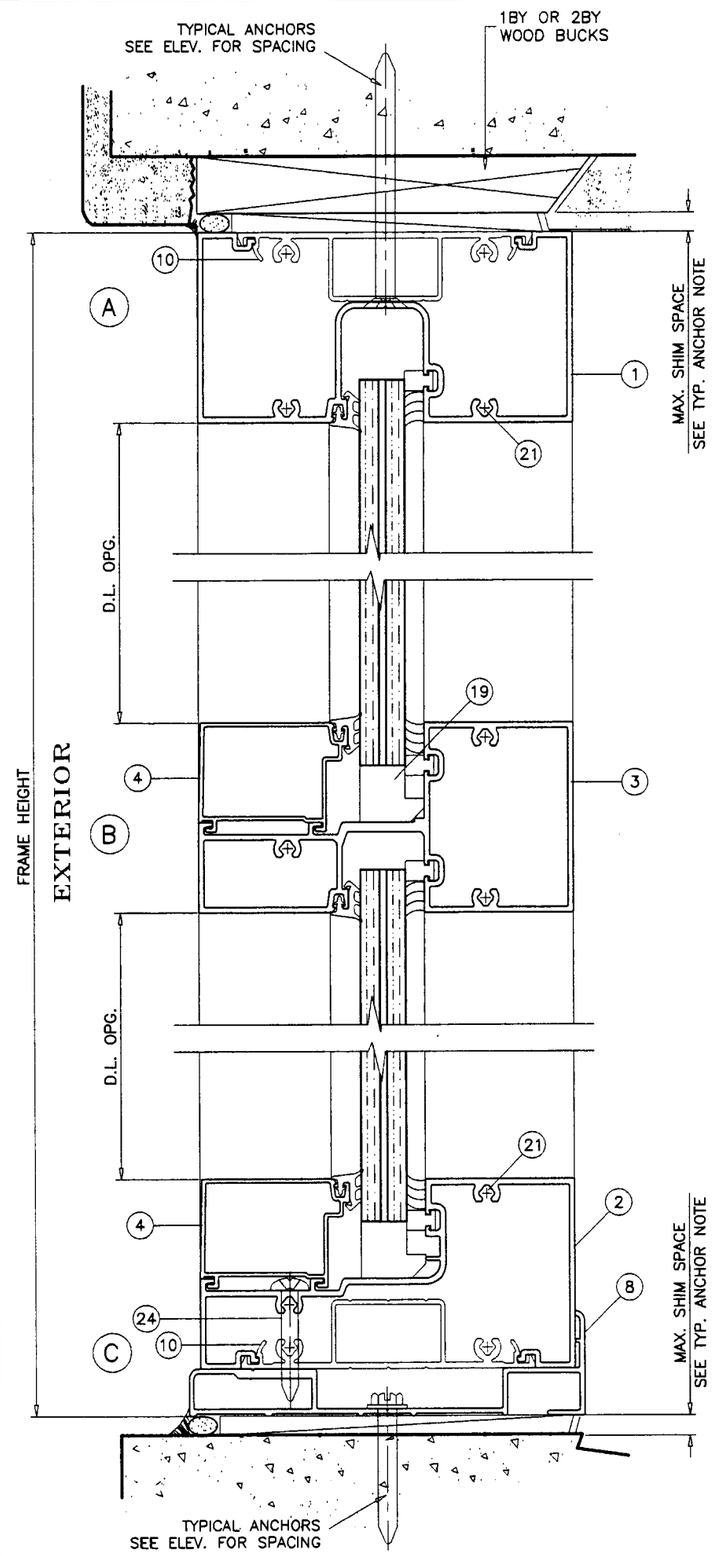

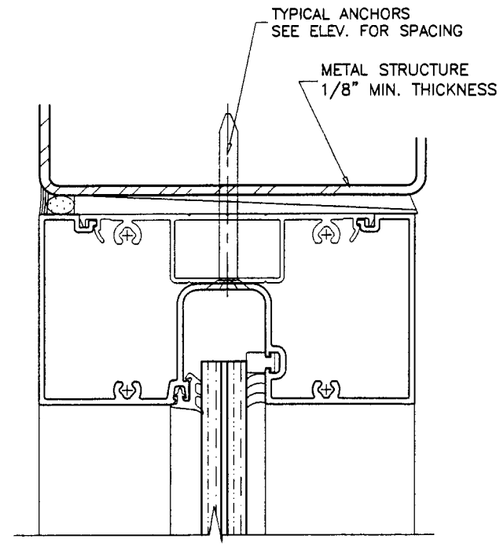

ITEM NO.	PART NUMBER	QUANTITY	DESCRIPTION	MATERIAL	MANF./SUPPLIER/REMARKS
1	E9-0601	AS REQD.	FRAME HEAD	6063-T5	-
2	E9-0615	AS REQD.	FRAME SILL	6063-T5	-
3	E9-0603	AS REQD.	FRAME HORIZONTAL	6063-T5	-
4	E9-0608	AS REQD.	GLAZING STOP	6063-T5	-
5	E9-0604	AS REQD.	FRAME JAMB	6063-T5	-
6	E9-0605	AS REQD.	MULLION	6063-T5	-
7	E9-0606	AS REQD.	POCKET FILLER	6063-T5	-
8	E9-0616	AS REQD.	SILL FLASHING	6063-T5	-
10	E1-1071	AS REQD.	ANCHOR PLATE	6063-T5	-
11	E1-1062	AS REQD.	REINFORCING CHANNEL	STEEL	LENGTH = FRAME HT. - 6 5/8"
13	DOW 995	AS REQD.	GLAZING COMPOUND	SILICONE	-
14	E2-0081	AS REQD.	EXTERIOR GLAZING GASKET	EPDM	FOR 1/4" GLASS
15	E2-0082	AS REQD.	EXTERIOR GLAZING GASKET	EPDM	FOR 3/8" & 7/16" GLASS
16	E2-0083	AS REQD.	EXTERIOR GLAZING GASKET	EPDM	FOR 9/16" GLASS
17	E2-0084	AS REQD.	INTERIOR SILICONE SPACER	EPDM	-
18	E2-0094	AS REQD.	SIDE BLOCK	EPDM	-
19	E2-0080	AS REQD.	SETTING BLOCK	EPDM	-
21	PC-1216	AS REQD.	#12 X 1" SMS	STEEL	FOR SCREW SPLINE
22	FF-1008	AS REQD.	#10 X 1/2" SMS	STEEL	FOR GLAZING POCKET FILLER
23	PC-1408	AS REQD.	#14 X 1/2" SMS	STEEL	FOR THRESHOLD
24	PC-1424	AS REQD.	#14 X 1-1/2" SMS	STEEL	FOR SILL

WOOD BUCKS AND METAL STRUCTURES NOT BY YKK INC. MUST SUPPORT LOADS IMPOSED BY GLAZING SYSTEM AND TRANSFER THEM TO THE BUILDING STRUCTURE.

TYPICAL ANCHORS: SEE ELEV. FOR SPACING

A) 1/4" DIA TAPPERS BY 'RAWL' (1/4" MAX. SHIM SPACE)
INTO WOOD STRUCTURES
WITH 2" MIN. PENETRATION INTO WOOD

THRU WOOD BUCKS INTO MASONRY
WITH 1-1/4" MIN. EMBED INTO CONC. OR MASONRY

B) 1/4" DIA TAPPERS BY 'RAWL' (1/4" MAX. SHIM SPACE)
DIRECTLY INTO MASONRY
WITH 1-1/4" MIN. EMBED INTO MASONRY

C) 3/8" DIA TAPPERS BY 'RAWL' (3/8" MAX. SHIM SPACE)
INTO WOOD STRUCTURES
WITH 3" MIN. PENETRATION INTO WOOD

THRU WOOD BUCKS INTO MASONRY
WITH 1-1/4" MIN. EMBED INTO CONC. OR MASONRY

D) 3/8" DIA TAPPERS BY 'RAWL' (3/8" MAX. SHIM SPACE)
DIRECTLY INTO MASONRY
WITH 1-1/4" MIN. EMBED INTO MASONRY

E) 3/8" DIA LAGS OR #24 WOOD SCREWS
INTO WOOD STRUCTURES
WITH 3" MIN. PENETRATION INTO WOOD

F) 1/4-20 KWIK-FLEX SELF DRILLING SCREWS BY 'HILTI'
INTO METAL STRUCTURES
(STEEL OR ALUMINUM 1/8" MIN. THICK.)

STEEL : Fy = 36 KSI MIN.
ALUMINUM : 6063-T5 MIN.

TYPICAL EDGE DISTANCE

INTO CONCRETE AND MASONRY = 3-1/2" MIN.
INTO WOOD STRUCTURE = 1" MIN.

SEALANTS:

ALL FRAME CORNERS SEALED WITH DOW-795 SILICONE SEALANT.

PRODUCT REVISED
as complying with the Florida Building Code
Acceptance No. 02-0215.16
Expiration Date AUG 15, 2007
By Ishaq I. Chanda
Miami Dade Product Control Division

Engr: DR. HUMAYOUN FAROOQ
STRUCTURES
FLA. PE # 16557

7/26/02

AL-FAROOQ CORPORATION
ENGINEERS, PLANNERS & PRODUCT DESIGN
1235 SW 87 AVE
MIAMI, FLORIDA 33174
TEL. (305) 264-8100 FAX. (305) 262-6978
STORE\W01-47YKK

YHS-50 ALUM FLUSH GLAZE STOREFRONT SYS. (L.M.)

YKK AP America
YKK AP AMERICA INC.
5630 GWALTNEY DRIVE
ATLANTA, GA. 30336
TEL.(404) 629-3800 FAX(404) 629-3810

revisions:

no	date	by	description

date: 07-25-01
scale: 1/2" = 1"
dr. by: HAMID
chk. by:

drawing no.
W01-47

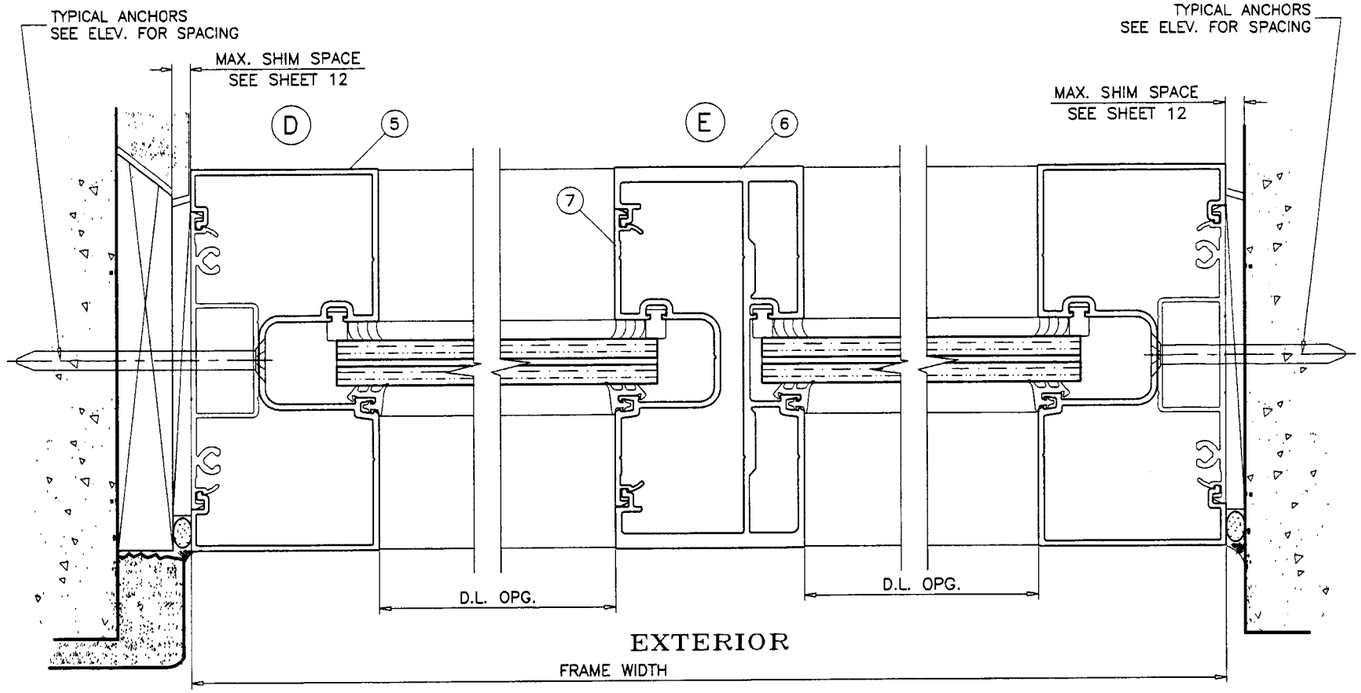

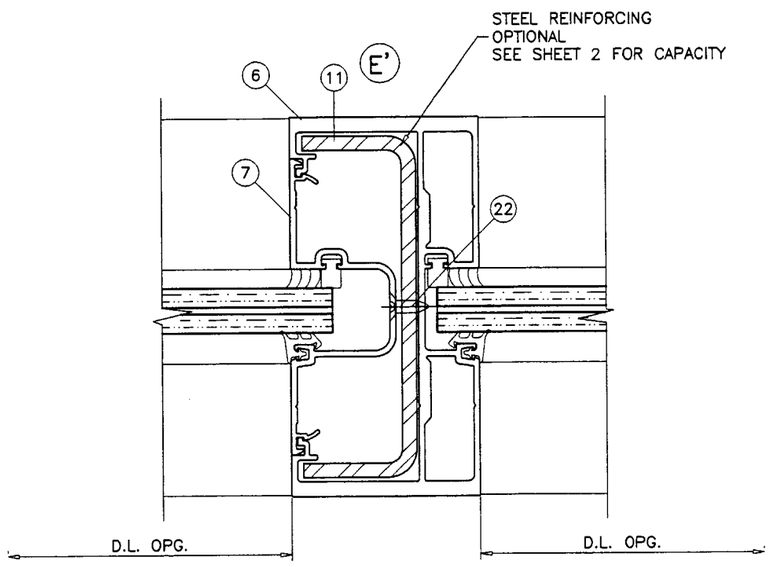

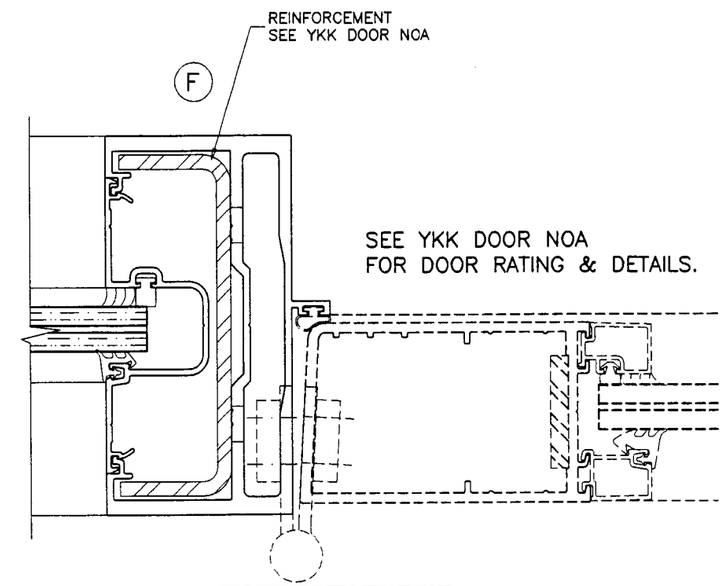

PRODUCT REVISED
as complying with the Florida Building Code
Acceptance No. 02-0215.16
Expiration Date AUG/15/2007
By Ishaq I. Chanda
Miami Dade Product Control Division

Engr: DR. HUMAYOUN FAROOQ
STRUCTURES
FLA. PE # 16557

JUL 2 6 2002

AL-FAROOQ CORPORATION
ENGINEERS, PLANNERS & PRODUCT DESIGN
1235 SW 87 AVE
MIAMI, FLORIDA 33174
TEL. (305) 264-8100 FAX. (305) 262-6978
STORE\W01-47YKK

YHS-50 ALUM FLUSH GLAZE STOREFRONT SYS. (L.M.)

YKK AP America
YKK AP AMERICA INC.
5630 GWALTNEY DRIVE
ATLANTA, GA. 30336
TEL.(404) 629-3800 FAX(404) 629-3810

revisions:			
no	date	by	description

date: 07-25-01
scale: 1/2" = 1"
dr. by: HAMID
chk. by:

drawing no.
W01-47

sheet 13 of 15

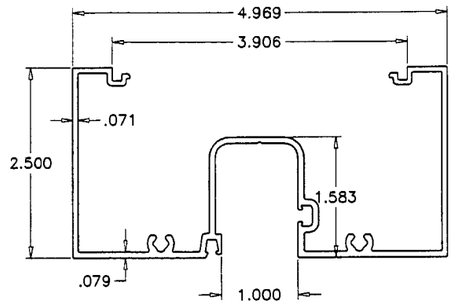

FRAME HEAD

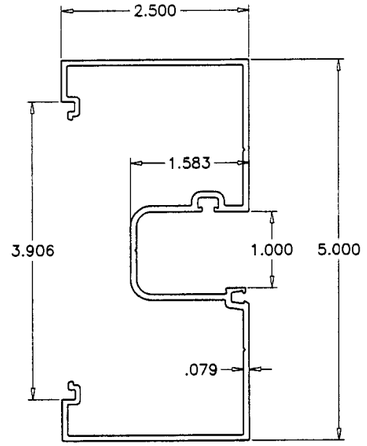

FRAME JAMB

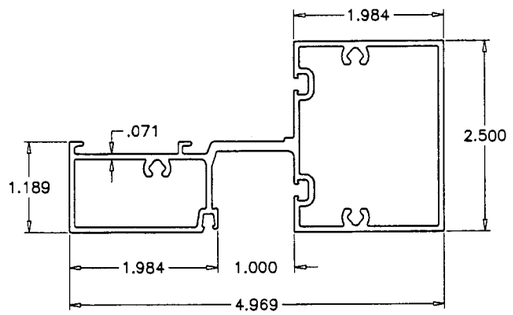

FRAME HORIZONTAL

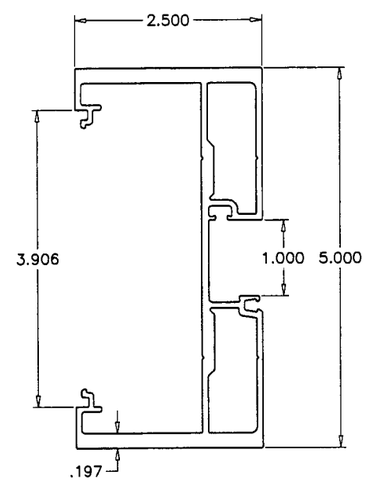

MULLION

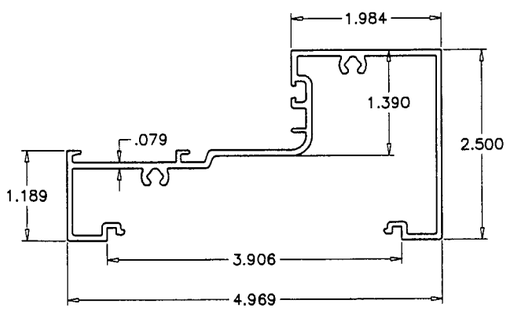

FRAME SILL

DIMENSIONS ARE INCHES

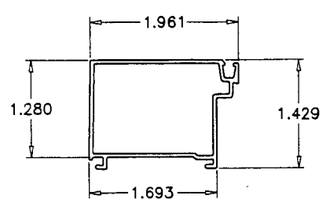

GLAZING STOP

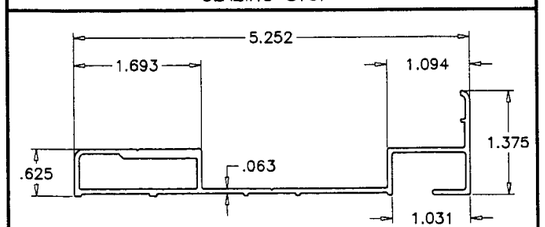

SILL FLASHING

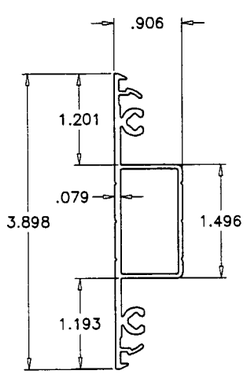

SNAP IN COVER

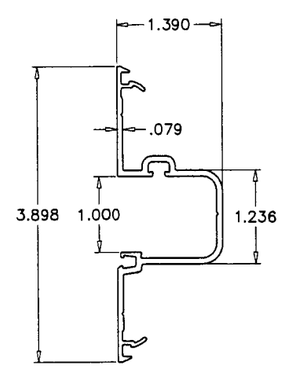

POCKET FILLER

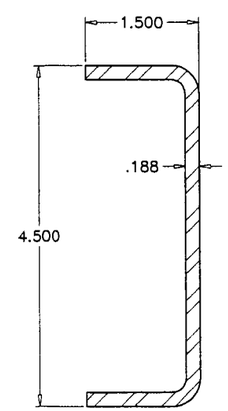

STEEL REINFORCING
36 KSI MIN.

PRODUCT REVISED
as complying with the Florida Building Code
Acceptance No. 02-0215.16
Expiration Date AUG 15, 2007
By Ishaq I. Chaudhary
Miami Dade Product Control Division

Engr: DR HUMAYOUN FAROOQ
STRUCTURES
FLA. PE # 16557

JUL 26 2002

AL-FAROOQ CORPORATION
ENGINEERS, PLANNERS & PRODUCT DESIGN
1235 SW 87 AVE
MIAMI, FLORIDA 33174
TEL. (305) 264-8100 FAX. (305) 262-6978

STORE\W01-47YKK

YHS-50 ALUM FLUSH GLAZE STOREFRONT SYS. (L.M.)

YKK AP AMERICA INC.
5630 GWALTNEY DRIVE
ATLANTA, GA. 30336
TEL(404) 629-3800 FAX(404) 629-3810

revisions:			
no	date	by	description

date: 07-25-01
scale: 1/2" = 1"
dr. by: HAMID
chk. by:

drawing no.
W01-47

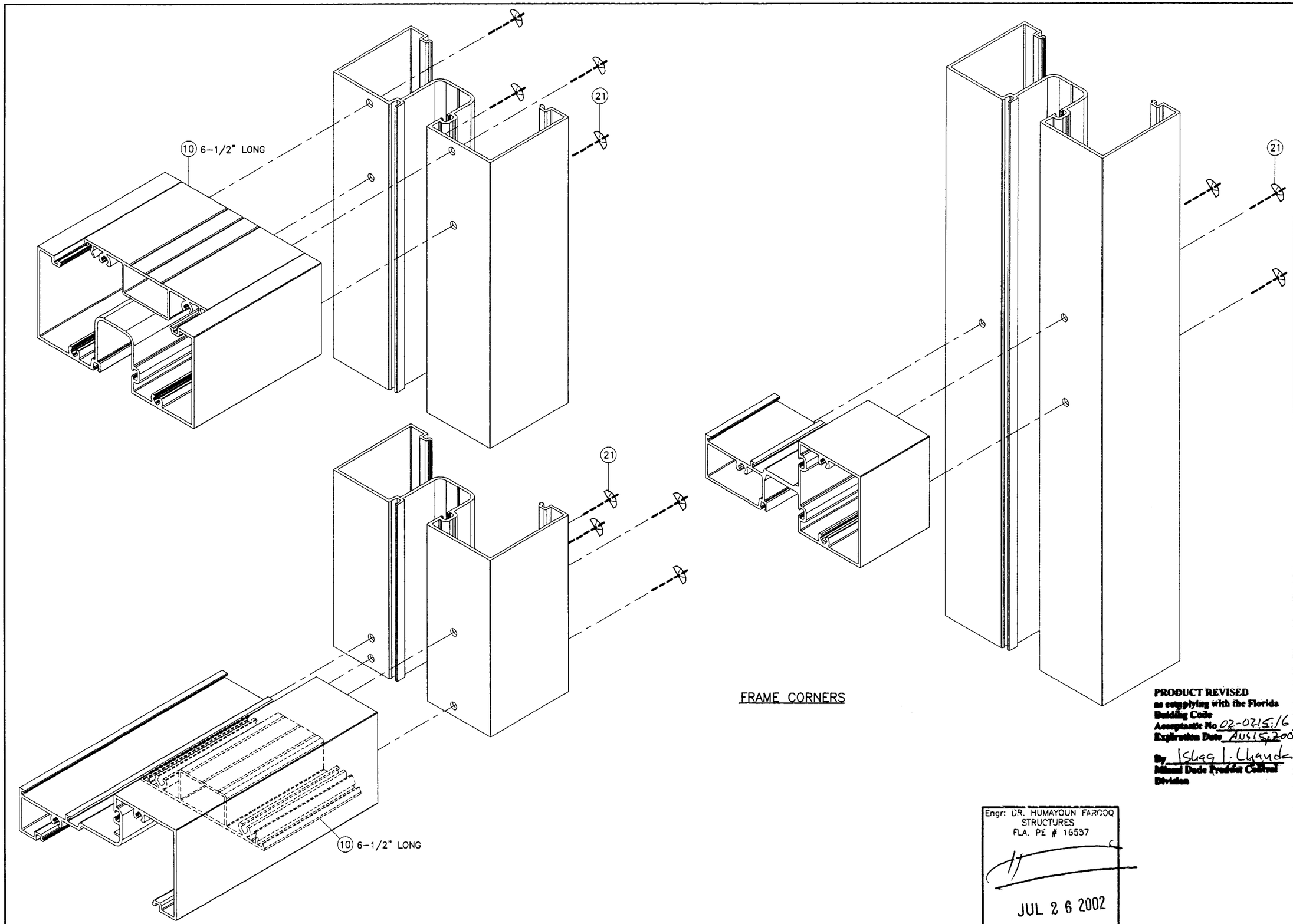

FRAME CORNERS

PRODUCT REVISED
as complying with the Florida Building Code
Acceptance No 02-0215.16
Expiration Date AUG 15, 2007
By Ishaq I. Chanda
Miami Dade Product Control Division

Engr: DR. HUMAYOUN FAROOQ
STRUCTURES
FLA. PE # 16537

JUL 2 6 2002

AL-FAROOQ CORPORATION
ENGINEERS, PLANNERS & PRODUCT DESIGN
1235 SW 87 AVE
MIAMI, FLORIDA 33174
TEL. (305) 264-8100 FAX. (305) 262-6978
STORE\W01-47YKK

YHS-50 ALUM FLUSH GLAZE STOREFRONT SYS. (L.M.)

YKK AP AMERICA INC.
5630 GWALTNEY DRIVE
ATLANTA, GA. 30336
TEL.(404) 629-3800 FAX(404) 629-3810

revisions:			
no	date	by	description

date: 07-25-01
scale: 1/2" = 1"
dr. by: HAMID
chk. by:

drawing no.
W01-47