MIAMI-DADE

BUILDING CODE COMPLIANCE OFFICE (BCCO)
PRODUCT CONTROL DIVISION

MIAMI-DADE COUNTY, FLORIDA
METRO-DADE FLAGLER BUILDING
140 WEST FLAGLER STREET, SUITE 1603
MIAMI, FLORIDA 33130-1563
(305) 375-2901 FAX (305) 375-2908

NOTICE OF ACCEPTANCE (NOA)

Baron Metal Industries, Inc.
101 Ashbridge Circle
Woodbridge, Ontario, L4L 3R5

SCOPE:
This NOA is being issued under the applicable rules and regulations governing the use of construction materials. The documentation submitted has been reviewed by Miami-Dade County Product Control Division and accepted by the Board of Rules and Appeals (BORA) to be used in Miami Dade County and other areas where allowed by the Authority Having Jurisdiction (AHJ).

This NOA shall not be valid after the expiration date stated below. The Miami-Dade County Product Control Division (In Miami Dade County) and/or the AHJ (in areas other than Miami Dade County) reserve the right to have this product or material tested for quality assurance purposes. If this product or material fails to perform in the accepted manner, the manufacturer will incur the expense of such testing and the AHJ may immediately revoke, modify, or suspend the use of such product or material within their jurisdiction. BORA reserves the right to revoke this acceptance, if it is determined by Miami-Dade County Product Control Division that this product or material fails to meet the requirements of the applicable building code.

This product is approved as described herein, and has been designed to comply with the High Velocity Hurricane Zone of the Florida Building Code.

DESCRIPTION: Series "F16/B20" Flush Outswing Commercial Steel Door

APPROVAL DOCUMENT: Drawing No. B.M.I.I. 022, titled "Series F16/B20 Steel Entrance Door", sheets 1 through 6, prepared by manufacturer, dated 3/12/99, bearing the Miami-Dade County Product Control Renewal stamp with the Notice of Acceptance number and expiration date by the Miami-Dade County Product Control Division.

MISSILE IMPACT RATING: Large and Small Missile Impact

LABELING: Each unit shall bear a permanent label with the manufacturer's name or logo, city, state and following statement: "Miami-Dade County Product Control Approved", unless otherwise noted herein.

RENEWAL of this NOA shall be considered after a renewal application has been filed and there has been no change in the applicable building code negatively affecting the performance of this product.

TERMINATION of this NOA will occur after the expiration date or if there has been a revision or change in the materials, use, and/or manufacture of the product or process. Misuse of this NOA as an endorsement of any product, for sales, advertising or any other purposes shall automatically terminate this NOA. Failure to comply with any section of this NOA shall be cause for termination and removal of NOA.

ADVERTISEMENT: The NOA number preceded by the words Miami-Dade County, Florida, and followed by the expiration date may be displayed in advertising literature. If any portion of the NOA is displayed, then it shall be done in its entirety.

INSPECTION: A copy of this entire NOA shall be provided to the user by the manufacturer or its distributors and shall be available for inspection at the job site at the request of the Building Official.
This NOA **renews NOA # 98-1116.02** and, consists of this page 1 as well as approval document mentioned above. The submitted documentation was reviewed by **Raul Rodriguez.**

PRODUCT CONTROL ACCEPTED

ASSEMBLY NO. 1
FS 16 FRAME,B20 DOOR
SCHLAGE LOCK NO. AL53PD
SCHLAGE DEAD BOLT NO. B660P
STRIKE PLATE SCHLAGE NO. 10-056 & 10-026
MASONRY WIRE JAMB ANCHORS

ASSEMBLY NO. 4
FS 16 FRAME AND B20 DOOR
MONARCH EXIT DEVICE NO. 18R-LE
STRIKE PLATE MONARCH NO. 570
EXISTING WALL ANCHOR SYSTEM JAMB ANCHORS

DESIGN PRESSURE : (+) 75.0 PSF / (-) 75.0 PSF
SHUTTERS NOT REQUIRED
SEE SHEET 3 & 4 OF 6 FOR
DOOR AND FRAME SPECIFICATIONS
NOTE: ELEVATION VIEW IS AN INTERIOR
VIEW AND DOORS ARE OUT SWING

ASSEMBLY NO. 2
FS 16 FRAME AND B20 DOOR
SCHLAGE MORTISE LOCK NO. L9453P
STRIKE PLATE SCHLAGE NO. 10-072
EXISTING WALL ANCHOR SYSTEM JAMB ANCHORS

ASSEMBLY NO. 3
FS 16 FRAME AND B20 DOOR
SCHLAGE LOCK NO. AL53PD
STRIKE PLATE SCHLAGE NO. 10-025

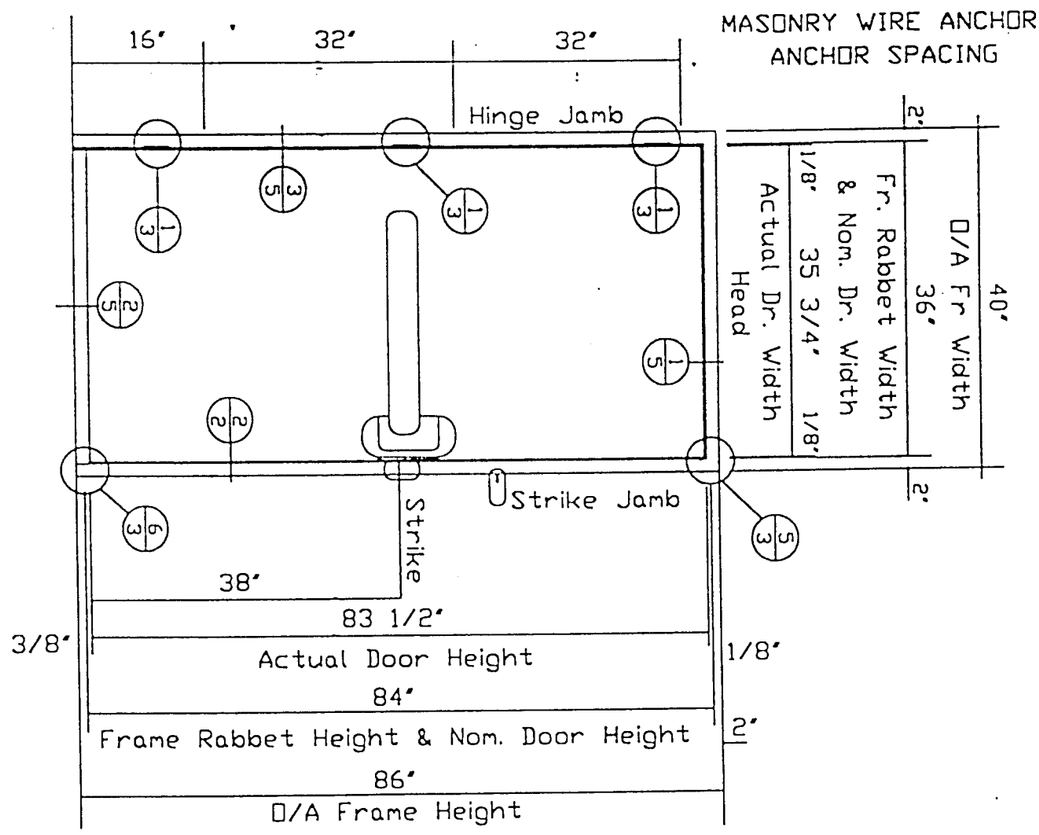

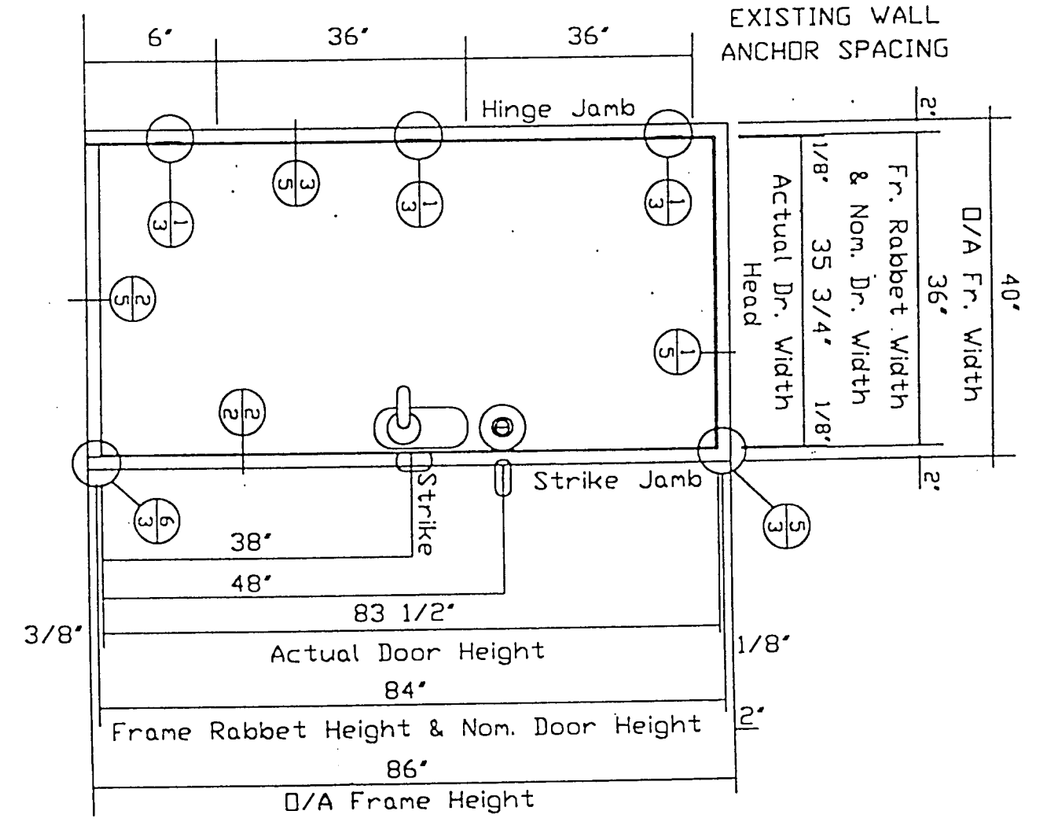

BARON METAL IND. INC.
101 ASHBRIDGE CIRCLE WOODBRIDGE
ONTARIO, CANADA L4L 3R5

SERIES: FS16/B20
STEEL ENTRANCE DOOR

DRAWN V. R.	DATE REV. 3/12/99	SCALE N. T. S.
DWG. NO. B.M.I.I. 022	5/15/98	SHEET NO. 1 OF 6

PRODUCT RENEWED
as complying with the Florida Buiding Code
Acceptance No. 92-0220.06
Expiration Date JUN 10 2007
By
Miami Dade Product Control Division

APPROVED AS COMPLYING WITH THE SOUTH FLORIDA BUILDING CODE
DATE June 10 1999
BY Ishaq I. Chaude
PRODUCT CONTROL DIVISION
BUILDING CODE COMPLIANCE OFFICE
ACCEPTANCE NO. 98-1116.02

② TYPICAL FRAME ELEVATION

FS 16 SERIES FRAME SPECIFICATIONS

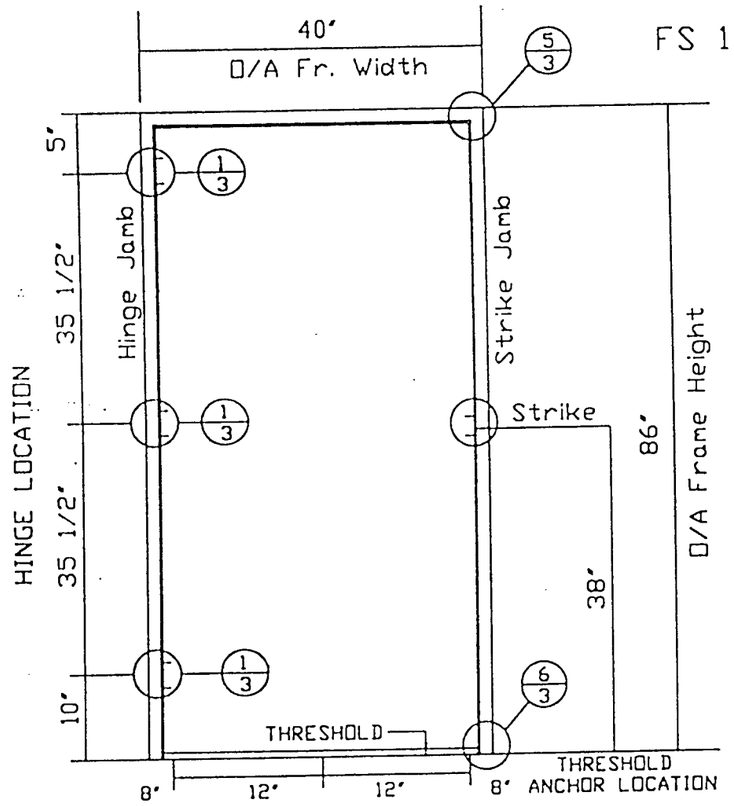

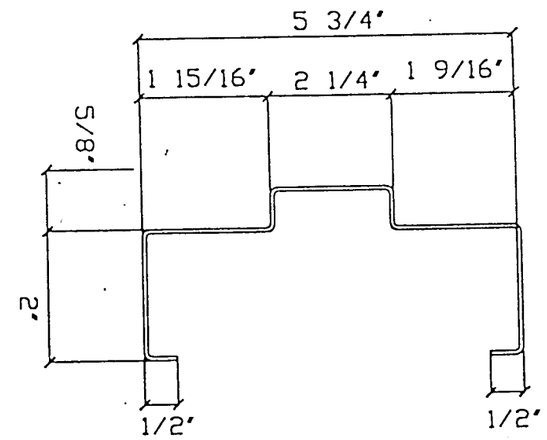

② TYPICAL FRAME PROFILE

Material : Frame reinforcement and anchors manufactured from tension leveled steel conforming to ASTM A924M-94, galvanized to ASTM A653M-94. Commercial Quality (DC), coating designation ZF75, known commercially as paintable galvanneal.

Type : 16 gage, double rabbet 5 3/4" (minimum). 2" face frame. See detail 2/2

Construction : Mitered corner construction, intersecting faces continuously welded on the inside, intersections stops tack welded on the inside, exposed face ground smooth, unwelded interior joint intersections caulked with GE Silicone II clear. Window and Door sealant. See detail 5/3

Reinforcements : Hinges - 10 gage high frequency type (det. 1/3) at all 3 cutout.
Strikes - 12 gage ASA type (det. 3/3) or 18 gage flat bar type (det. 4/3) to suit strike specified
Closer - 16 gage flat bar (where specified)

Wall Anchors : New Unit Masonry Walls - Three (3) 0.175" diameter loose wire anchor per jamb.

or Existing Unit Masonry or Poured Concrete Walls - Each jamb punched and dimpled for Three 3/8" diameter x 5" long sleeve anchors and provided with three 18 gage Existing Wall Anchor Guides, tack-welded to the inside of frame profile four places per guide. See details 6/3 and 8/4.

Floor Anchors : One (1) 16 gage Floor Anchor (del. 6/3) projection welded to base of each jamb.

APPROVED AS COMPLYING WITH THE SOUTH FLORIDA BUILDING CODE
DATE June 10 1997
BY Ishay I. Chanda
PRODUCT CONTROL DIVISION
BUILDING CODE COMPLIANCE OFFICE
ACCEPTANCE NO. 98-1116.02

PRODUCT RENEWED
as complying with the Florida Building Code
Acceptance No 02-0220.04
Expiration Date JUN 10 2007
By: Miami Dade Product Control Division

BARON METAL IND. INC.
101 ASHBRIDGE CIRCLE WOODBRIDGE
ONTARIO, CANADA L4L 3R5

SERIES: FS16/B20
STEEL ENTRANCE DOOR

DRAWN V. R.	DATE	REV. 3/12/99	SCALE N. T. S.
DWG. NO. B.M.I.I. 022	5/15/98	SHEET NO.	2 OF 6

(3/3) TYPICAL DOOR ELEVATION
B20 SERIES DOOR SPECIFICATIONS

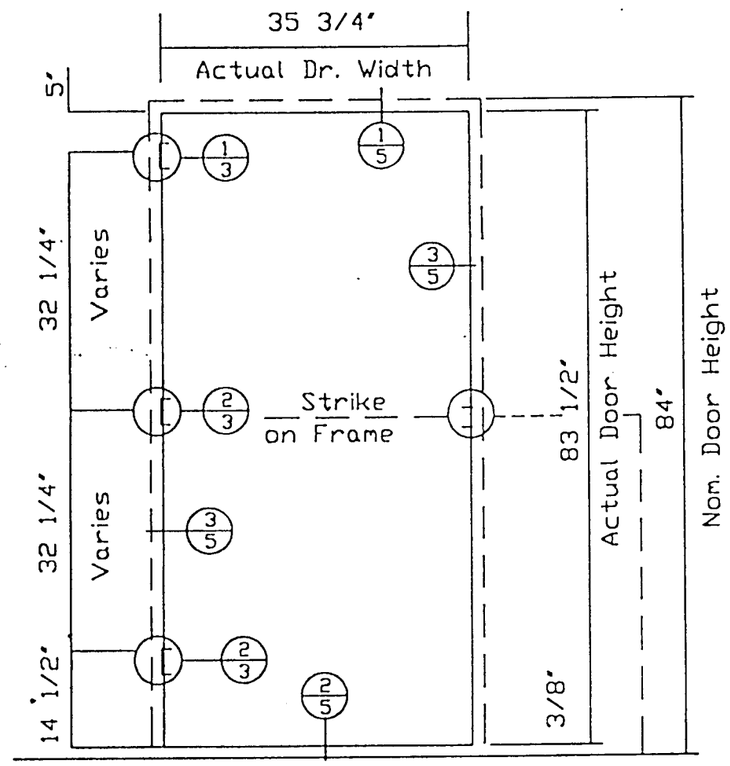

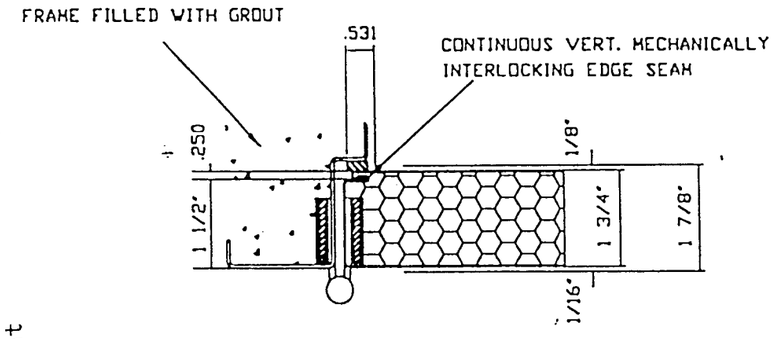

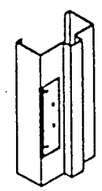

(3/5)

TYPICAL SECTION AT DOOR EDGE
AND HINGES REINFORCEMENT

Hardware : Hinges - Three Hager # 1279 x USP 4.5" x 4.5" x .134
With (8) 1/2" x 12-24 flat head machine screws per hinge.
or Cylindrical Lock - One Schlage # AL53PD x SAT x 26D and
Dead bolt - One Schlage # B660P x 26D
or Mortise Lock - One Schlage # L9453P x 26D
or Rim Exit Device - One Monarch # 18R-LE x 32D
or Cylindrical lock - One Schlage # AL53PD X SAT X 26D

Material : Face sheets internal components and reinforcements manufactured from tension leveled steel conforming to ASTM A924M-94, galvanized to ASTM A653M-94. Commercial Quality (DC), coating designation ZF75, known commercially as paintable galvanneal.

Construction : 1 3/4" thick 20 gage face sheets paper honeycomb core full flush, interlocking edge seams commercial swinging door. See details 3/5
Honeycomb Core: Unexpanded 33 lb/1000 sq. ft. wt. 180 ply. single glue line 1" cell 1.1 lb./cu.ft. density (expanded) 23 in. lbs/sq. in. compressive strength (ASTM C-365). 3900 in. lbs/sq. in compressive modules (EC) 17 in shear strength in length (ASTM C-273). 13 in. lbs/sq. in. (Tc) shear strength in width (ASTM C-273) 3,400 in lbs/sq. in. (Gc) shear modules in length 1,600 in lbs/sq. in. (Gc) shear modules in width
Core is bonded to face sheets with spray applied Nacan # 34-9014 reactive hot melt polyurethane adhesive with isocyanate catalyzing agent. Application rate 8 grams/sq.ft. of core.

Top & Bottom : 16 gage inverted end channels projection welded to face sheets. See details 1 & 2/5.

Reinforcements : Hinges - 10 gage high frequency type (det. 1/3) at all 3 cutout.
Locks - Cylindrical Type - 12 gage (detail 5/5)
- Mortise Type - 16 gage (detail 4/5)
- Rim Exit Device - 16 gage (detail 6/5)

Finish : Tough-up with zinc Rich primer (primer optional)

APPROVED AS COMPLYING WITH THE SOUTH FLORIDA BUILDING CODE
DATE June 30 - 1997
BY Jesus L. Glenda
PRODUCT CONTROL DIVISION
BUILDING CODE COMPLIANCE OFFICE
ACCEPTANCE NO. 98-1116.02

PRODUCT RENEWED
as complying with the Florida Building Code
Acceptance No. 02-0220.06
Expiration Date June 16 2002
By
Miami Dade Product Control Division

BARON METAL IND. INC.
101 ASHBRIDGE CIRCLE WOODBRIDGE
ONTARIO, CANADA L4L 3R5

SERIES: FS16/B20
STEEL ENTRANCE DOOR

DRAWN V. R.	DATE: REV. 3/12/99	SCALE N. T. S.	
DWG. NO. B.M.I.I. 022	5/15/98	SHEET NO. 3 OF 6	

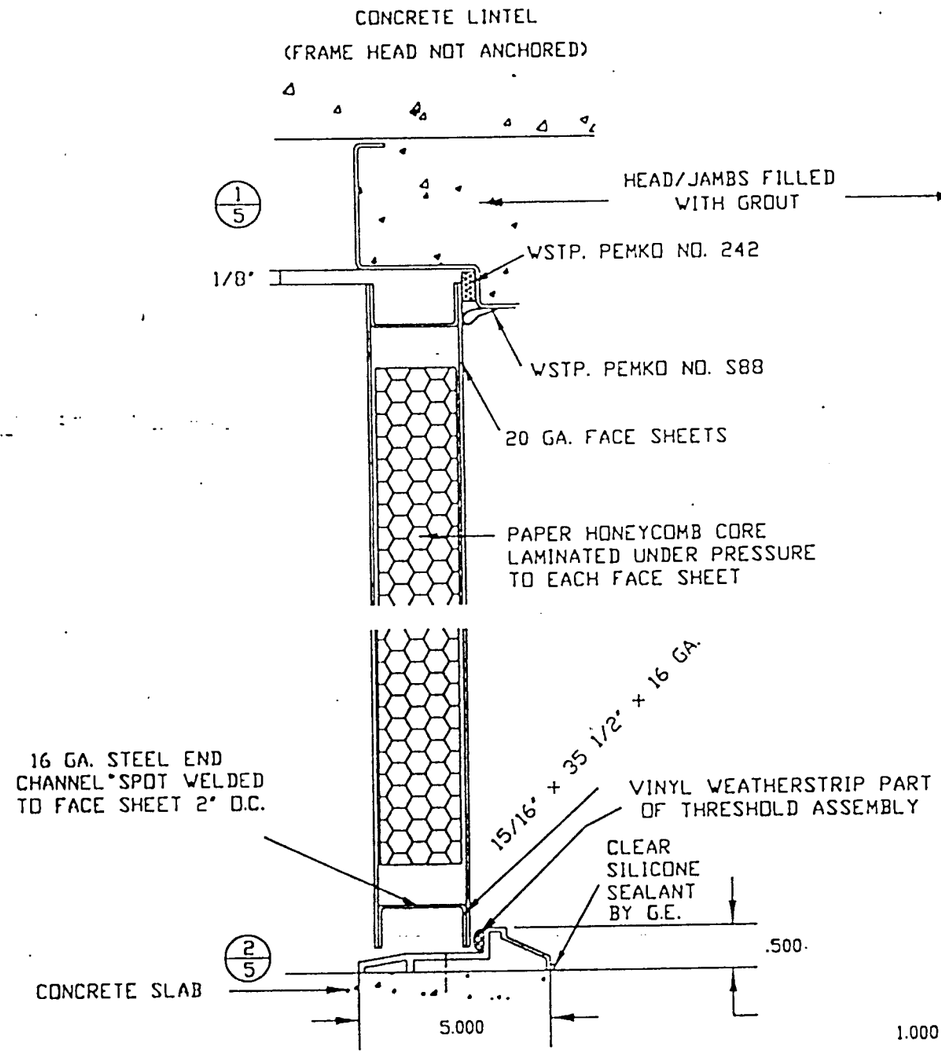

ALUM. THRESHOLD PART NO. 2005AV

TYPICAL VERTICAL LAYOUT

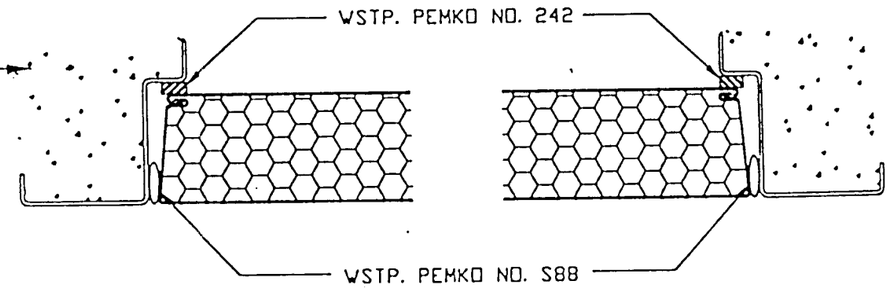

TYPICAL HORIZONTAL LAYOUT

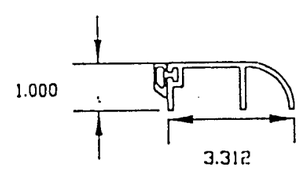

ALUM. THRESHOLD PART NO. 2051AV

THRESHOLD DETAIL (OPTIONAL)

APPROVED AS COMPLYING WITH THE SOUTH FLORIDA BUILDING CODE
DATE June 10 1999
BY Ishag I. Chanda
PRODUCT CONTROL DIVISION
BUILDING CODE COMPLIANCE OFFICE
ACCEPTANCE NO. 98-1116.02

PRODUCT RENEWED
as complying with the Florida Building Code
Acceptance No. 02-0220.06
Expiration Date JUN 10 2007
By
Miami Dade Product Control Division

BARON METAL IND. INC.
101 ASHBRIDGE CIRCLE WOODBRIDGE
ONTARIO, CANADA L4L 3R5

SERIES: FS16/B20
STEEL ENTRANCE DOOR

DRAWN V. R.	DATE REV. 3/12/99	SCALE N. T. S.	
DWG. NO. B.M.I.I. 022 5115198	SHEET NO. 4 OF 6		

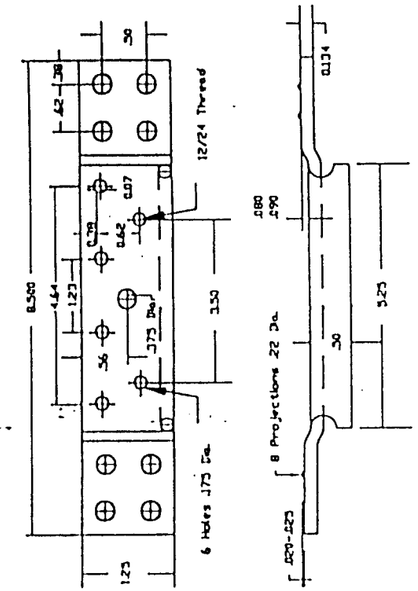

HIGH FREQUENCY
HINGE REINFORCING 10 GAGE STEEL

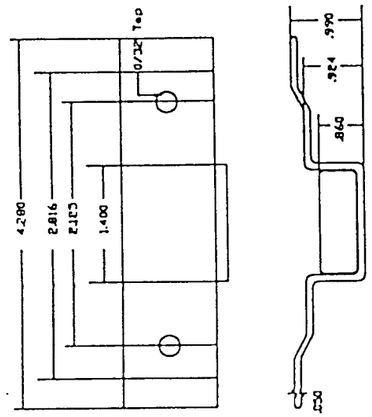

STANDARD DEADLOCK STRIKE
REINFORCING 8.32 C/W BOX
16 GAUGE

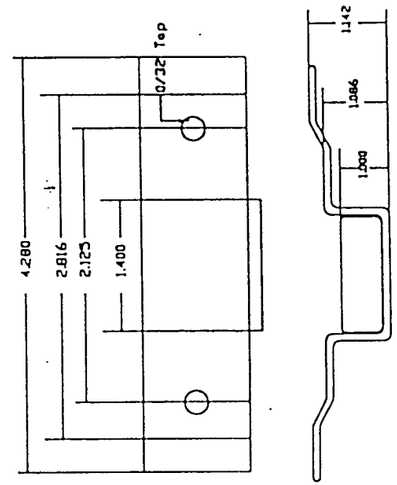

ASA STRIKE
REINFORCING 16 GAGE

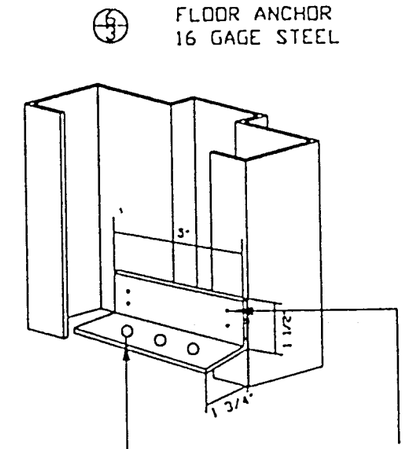

FLOOR ANCHOR
16 GAGE STEEL

FLOOR ANCHOR PROJECTION
WELDED TO BOTT. OF EACH JAMB

FOR CONCRETE FLOORS, FLOOR ANCHOR SHOT
AND PINED TO FLOOR (2 PINS PER ANCHOR)
2" LONG & .300 DIA. PIN AND .125 WASHER
FOR WOOD FLOOR, FLOOR ANCHORS MECHANICALLY
SECURED TO FLOOR (2) 1/4" x 4" STEEL LAG
BOLTS PER ANCHOR)

BODY FILE AND GRID SMOOTH
AT MITER ON OUTSIDE ONLY

FULLY WELD OF MITER

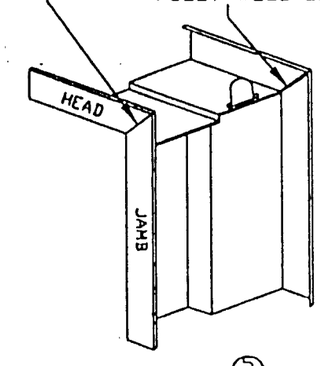

TYPICAL JAMB/HEAD INTERSECTION

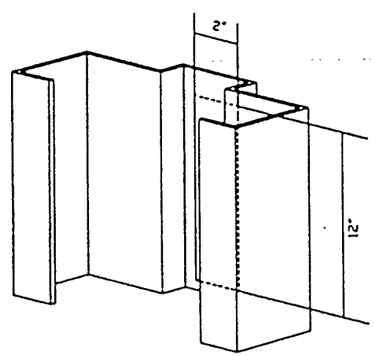

RIM STRIKE
REINFORCING 18 GAGE STEEL

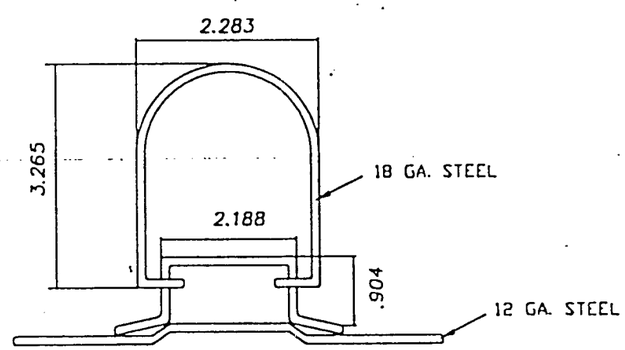

CYLINDRICAL LOCK REINFORCING
ASSY. 18 GA. STEEL

ANCHOR GUIDES SECURED TO
INSIDE OF FRAME PROFILE WITH
(4) SPOT WELDS PER GUIDE

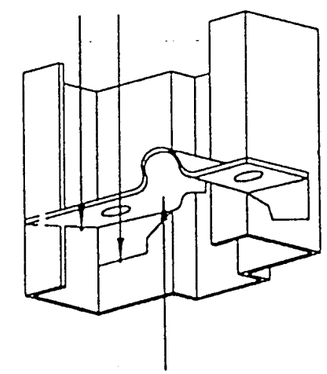

18 GAGE EXISTING
WALL ANCHOR GUIDE

APPROVED AS COMPLYING WITH THE
SOUTH FLORIDA BUILDING CODE
DATE June 10 1999
BY Ishag I. Chauda
PRODUCT CONTROL DIVISION
BUILDING CODE COMPLIANCE OFFICE
ACCEPTANCE NO. 98-1116.02

PRODUCT RENEWED
as complying with the Florida
Buiding Code
Acceptance No 02-0220.06
Expiration Date JUN 10 2007
By
Miami Dade Product Control
Division

BARON METAL IND. INC.
101 ASHBRIDGE CIRCLE WOODBRIDGE
ONTARIO, CANADA L4L 3R5

SERIES: FS16/B20
STEEL ENTRANCE DOOR

DRAWN V. R. | DATE REV. 3/12/99 | SCALE N. T. S.

DWG. NO. B.M.I.I. 022 5115198 | SHEET NO. 5 OF 6

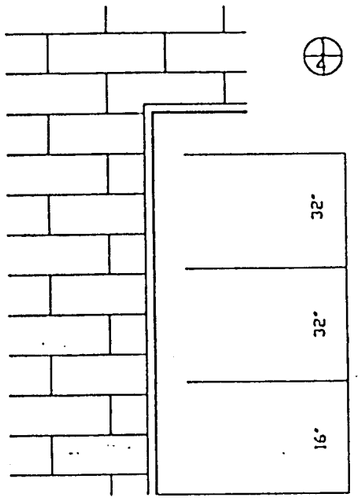

MASONRY WIRE
ANCHOR SPACING
(3 ANCHORS PER JAMB)

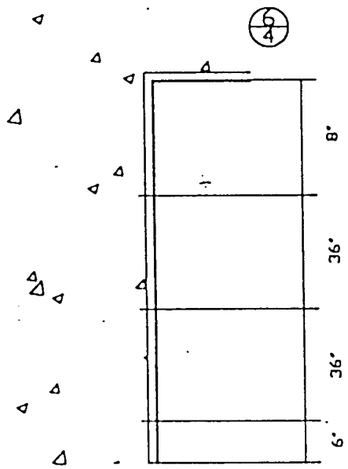

EXISTING WALL ANCHOR GUIDE
AND PREPARATION SPACING
(3 ANCHORS PER JAMB)

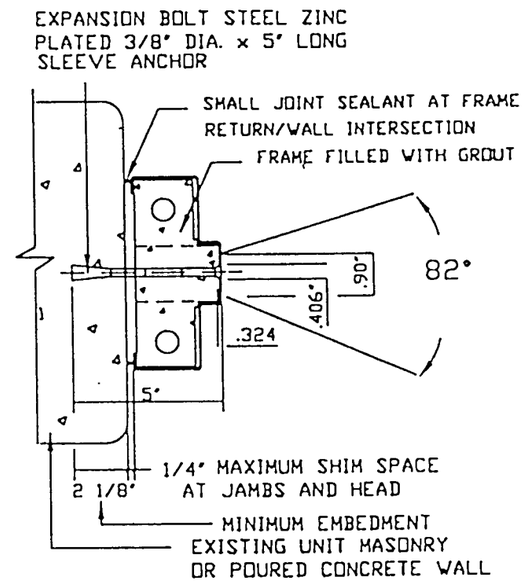

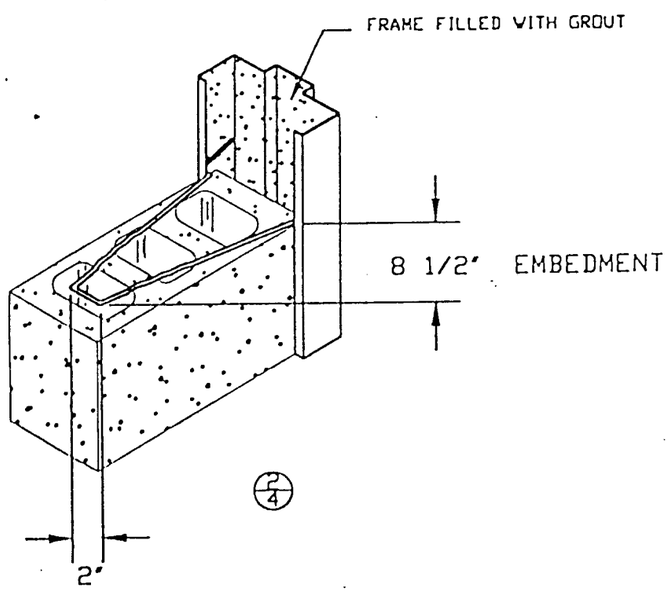

.175" DIA. ASTM 36 STEEL WIRE ANCHOR
SHIPPED LOOSE TO JOB SITE
ANCHOR LAID IN 1500 PSI MIN. MORTAR JOINT
BETWEEN BLOCKS.

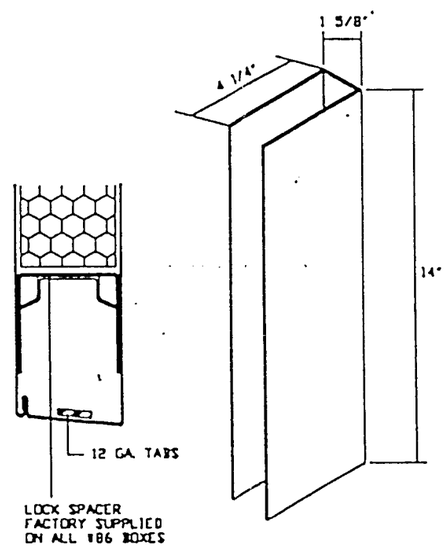

MORTISE LOCK REINFORCING
ASSEMBLY 16 GA. STEEL

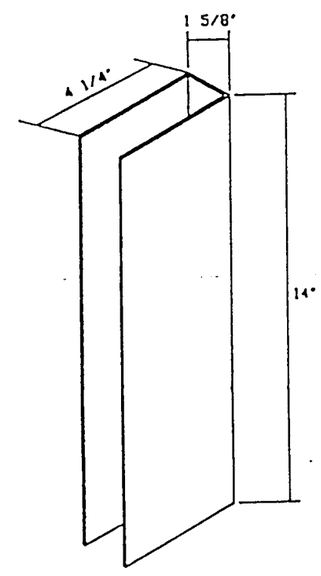

RIM EXIT DEVICE REINFORCING
CHANNEL 16 GA. STEEL

MIN. YEILD STRENGTH = 45,000 PSI

APPROVED AS COMPLYING WITH THE
SOUTH FLORIDA BUILDING CODE
DATE June 10 1999
BY Shag L. Chanda
PRODUCT CONTROL DIVISION
BUILDING CODE COMPLIANCE OFFICE
ACCEPTANCE NO. 98-1116.02

PRODUCT RENEWED
as complying with the Florida
Building Code
Acceptance No. 02-0220.06
Expiration Date JUN 10 2007
By
Miami Dade Product Control
Division

BARON METAL IND. INC.
101 ASHBRIDGE CIRCLE WOODBRIDGE
ONTARIO, CANADA L4L 3R5

SERIES: FS16/B20
STEEL ENTRANCE DOOR

DRAWN V. R. | DATE REV. 3/12/99 | SCALE N. T. S.
DWG. NO. B.M.I.I. 022 5/15/98 | SHEET NO. 6 OF 6