MIAMI-DADE

BUILDING CODE COMPLIANCE OFFICE (BCCO)
PRODUCT CONTROL DIVISION

MIAMI-DADE COUNTY, FLORIDA
METRO-DADE FLAGLER BUILDING
140 WEST FLAGLER STREET, SUITE 1603
MIAMI, FLORIDA 33130-1563
(305) 375-2901 FAX (305) 375-2908

NOTICE OF ACCEPTANCE (NOA)

Whirlwind Building Systems
8234 Hansen Road
Houston, Texas 77075-1089

SCOPE:
This NOA is being issued under the applicable rules and regulations governing the use of construction materials. The documentation submitted has been reviewed by Miami-Dade County Product Control Division and accepted by the Board of Rules and Appeals (BORA) to be used in Miami Dade County and other areas where allowed by the Authority Having Jurisdiction (AHJ).

This NOA shall not be valid after the expiration date stated below. The Miami-Dade County Product Control Division (In Miami Dade County) and/or the AHJ (in areas other than Miami Dade County) reserve the right to have this product or material tested for quality assurance purposes. If this product or material fails to perform in the accepted manner, the manufacturer will incur the expense of such testing and the AHJ may immediately revoke, modify, or suspend the use of such product or material within their jurisdiction. BORA reserves the right to revoke this acceptance, if it is determined by Miami-Dade County Product Control Division that this product or material fails to meet the requirements of the applicable building code.

This product is approved as described herein, and has been designed to comply with the High Velocity Hurricane Zone of the Florida Building Code.

DESCRIPTION: Super Span 24 ga. (0.024" min.) Steel Roof Panel

APPROVAL DOCUMENT: Drawing No. 14003501, titled " Super Span 24 Ga. Details ", sheets 1 through 4 of 4, prepared by Terrence E. Wolfe, P.E., last revised dated March 26, 2002, bearing the Miami-Dade County Product Control Approval stamp with the Notice of Acceptance number and approval date by the Miami-Dade County Product Control Division.

MISSILE IMPACT RATING: Large and Small Missile Impact

LABELING: Each panel shall bear a permanent label with the manufacturer's name or logo, city, state and the following statement: "Miami-Dade County Product Control Approved", unless otherwise noted herein.

RENEWAL of this NOA shall be considered after a renewal application has been filed and there has been no change in the applicable building code negatively affecting the performance of this product.

TERMINATION of this NOA will occur after the expiration date or if there has been a revision or change in the materials, use, and/or manufacture of the product or process. Misuse of this NOA as an endorsement of any product, for sales, advertising or any other purposes shall automatically terminate this NOA. Failure to comply with any section of this NOA shall be cause for termination and removal of NOA.

ADVERTISEMENT: The NOA number preceded by the words Miami-Dade County, Florida, and followed by the expiration date may be displayed in advertising literature. If any portion of the NOA is displayed, then it shall be done in its entirety.

INSPECTION: A copy of this entire NOA shall be provided to the user by the manufacturer or its distributors and shall be available for inspection at the job site at the request of the Building Official.

This NOA consists of this page 1 as well as approval document mentioned above.
The submitted documentation was reviewed by **Helmy A. Makar, P.E.**

PRODUCT CONTROL ACCEPTED

NOA No 02-0222.13
Expiration Date: 05/16/2007
Approval Date: 05/16/2002

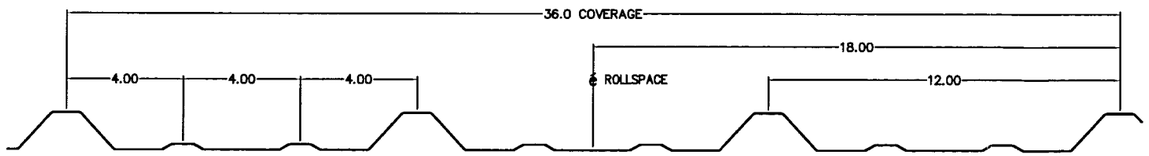

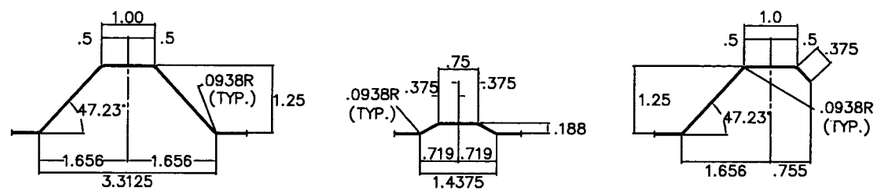

PANEL PROPERTIES						
PANEL GAGE	PAINTED PANEL THICKNESS	YIELD STRENGTH*	TENSILE STRENGTH*	ELONGATION*	STEEL COATING*	PAINT COATINGS
24	0.024"	50 KSI	65 KSI	26.5	AZ 55	KYNAR 500
		*CONFORM TO ASTM A792 STRUCTURAL QUALITY GRADE 50				

NOTES:

1. THE 24 GAGE SUPERSPAN ROOF PANELS SHALL BE USED FOR ROOF CONSTRUCTION ONLY. THE ACTURAL ROOF PROJECT SHALL BE CONSTRUCTED USING THE SAME DETAILS SHOWN ON THESE DRAWINGS INCLUDING:
   A) DETAILS, ALL PANEL MATERIAL CHARACTERISTICS AND SECTION WITH DIMENSION AND THICKNESS
   B) ERECTION DETAILS INCLUDING ALL CONNECTION'S FASTENERS WITH SIZE AND LOCATION.
   C) PANEL MAXIMUM SPAN AND PRESSURE FOR THE FIELD, PERIMETERS AND CORNERS BASED ON PANEL ALLOWABLES SHOWN BELOW.

2. THE MAXIMUM ALLOWABLE SPANS AND UPLIFT PRESSURES FOR THE SUPERSPAN STEEL ROOF PANEL IN THE ROOF'S FIELD, PERIMETER AND CORNER ZONES SHALL BE BASED ON THE FOLLOWING PANEL ALLOWABLES (USE SMALLEST SPAN FOR THE GIVEN PRESSURE):

   A) MAXIMUM ALLOWABLE BENDING MOMENT OF THE PANEL AT SUPPORTS = 112.65 FT-LBS.
   B) MAXIMUM ALLOWABLE BENDING MOMENT OF THE PANEL BETWEEN SUPPORTS = 90.12 FT-LBS.
   C) EI VALUE OF PANEL = 1,268,722.0 LBS-IN^2.
   D) MAXIMUM ALLOWABLE DEFLECTION OF ROOF PANEL = L/240.
   E) MAXIMUM SUPPORT REACTION = 239.84 LBS.

3. ALL PANEL SUBMEMBERS SHALL BE MINIMUM 16 GAGE (.056 "). THEY ARE NOT PART OF THIS APPROVAL AND THEY SHALL BE REVIEWED STRUCTURALLY BY THE STRUCTURAL PLANS EXAMINER OF THE CORRESPONDING BUILDING DEPARTMENT FOR EACH JOB.

4. MAXIMUM ALLOWABLE PANEL SPAN = 5'-2".

PANEL ACCESSORIES

#12-14 x 1 1/4" ULTIMATE LONG-LIFE ZINC-ALUMINUM HEAD SELF-DRILLING w/ SEALING WASHER, BY ATLAS.

#14-14 x 7/8" ULTIMATE LONG-LIFE ZINC-ALUMINUM HEAD SELF-DRILLING w/ SEALING WASHER, BY ATLAS.

#10 x 1" WOODTITE WOOD FASTENER w/DISH-BONDED ONE-PIECE SEALING WASHERS.

SUPER SPAN INSIDE(CS29R) AND OUTSIDE(CS28R) CLOSURES BY GUARDIAN.

1" x $\frac{3}{32}$" BUTYL TAPE

$\frac{7}{8}$" x $\frac{3}{16}$" BUTYL TAPE

2 $\frac{1}{2}$" x $\frac{3}{16}$" TRI-BEAD BUTYL TAPE

SM5522 ACRYL-R ACRYLIC SEALANT

Terrence E. Wolfe
04/01/02

Approved as complying with the Florida Building Code
Date 05/16/2002
NOA# 02-0222.13
Miami Dade Product Control Division
By Helena A. Melo

MANUFACTURING ENGINEER: TERRENCE E. WOLFE, P.E.

FLORIDA REGISTRATION NO.: 44923

WHIRLWIND BUILDING SYSTEMS SUPER SPAN 24 GA.

WHIRLWIND BUILDING SYSTEMS
P.O. BOX 75280 • 8234 HANSEN
HOUSTON, TX 77234-5280 • 713-946-7140

PROJECT: DADE COUNTY PRODUCT APPROVAL

SHEET TITLE: SUPER SPAN 24 GA. DETAILS

LOCATION: DADE COUNTY, FLORIDA

REV.	BY	DESCRIPTION	DATE

DRAWN BY:
CHECKED BY:
PROJECT NUMBER:
REVISION DATE: 3-26-02
SCALE: N.T.S.
DRAWING NUMBER: 14003501
SHEET NUMBER: 1 of 4

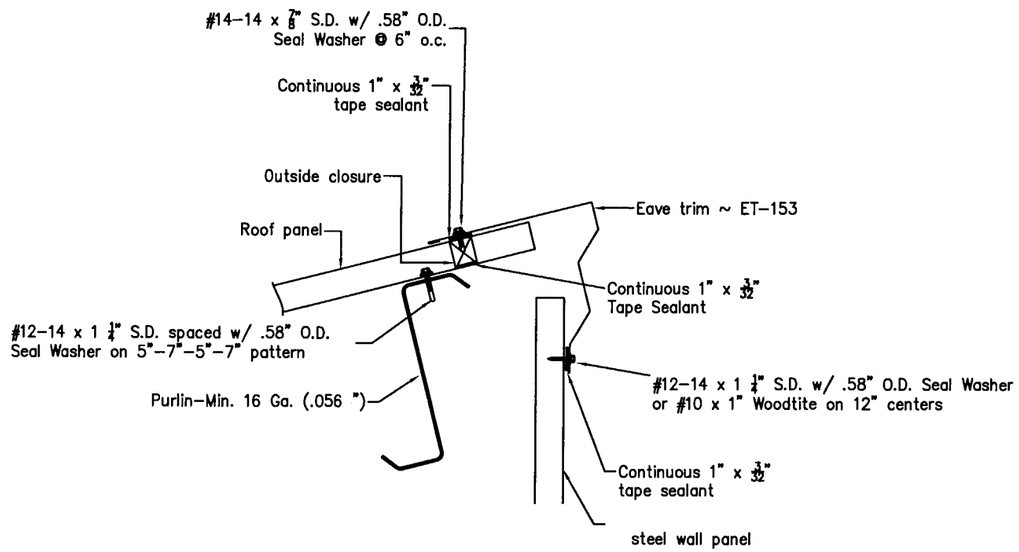

SECTION "C" HIGH EAVE

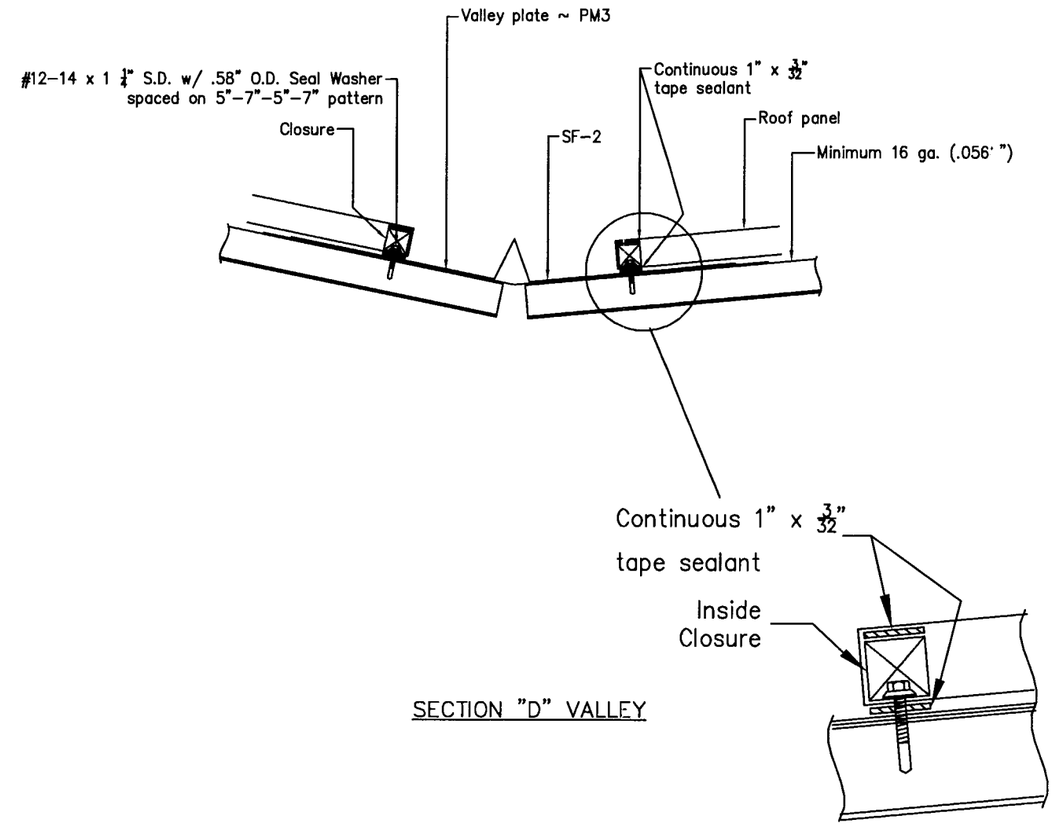

SECTION "D" VALLEY

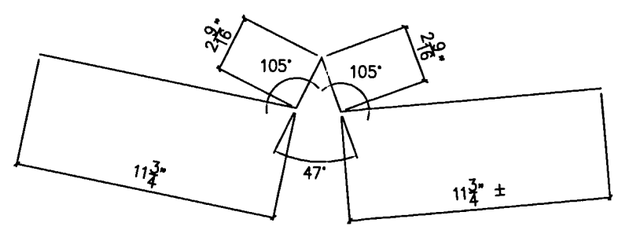

Special 24 ga. (.024") Valley Trim ~ SF-2

Cut = 22-9/16"

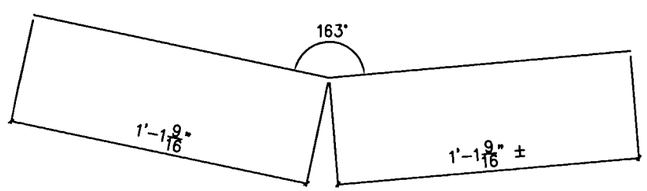

Special Valley Plate ~ PM3

22.875 x .100 (12GA) Red-Oxide

Approved as complying with the Florida Building Code
Date 05/16/2002
NOA# 02-0222.13
Miami Dade Product Control Division
By Helena A. Molina

MANUFACTURING ENGINEER
TERRENCE E. WOLFE, P.E.

FLORIDA REGISTRATION NO.
44923

WHIRLWIND BUILDING SYSTEMS SUPER SPAN 24 GA.

WHIRLWIND BUILDING SYSTEMS
P.O. BOX 75280 • 8234 HANSEN
HOUSTON, TX 77234-5280 • 713-946-7140

PROJECT
DADE COUNTY PRODUCT APPROVAL

REV.	BY	DESCRIPTION	DATE

SHEET TITLE
SUPER SPAN 24 GA. DETAILS

DRAWN BY:
CHECKED BY:
REVISION DATE: 3-26-02
SCALE N.T.S.

LOCATION
DADE COUNTY, FLORIDA

PROJECT NUMBER
DRAWING NUMBER 14003501
SHEET NUMBER 4 of 4

Terrence E. Wolfe
04/01/02

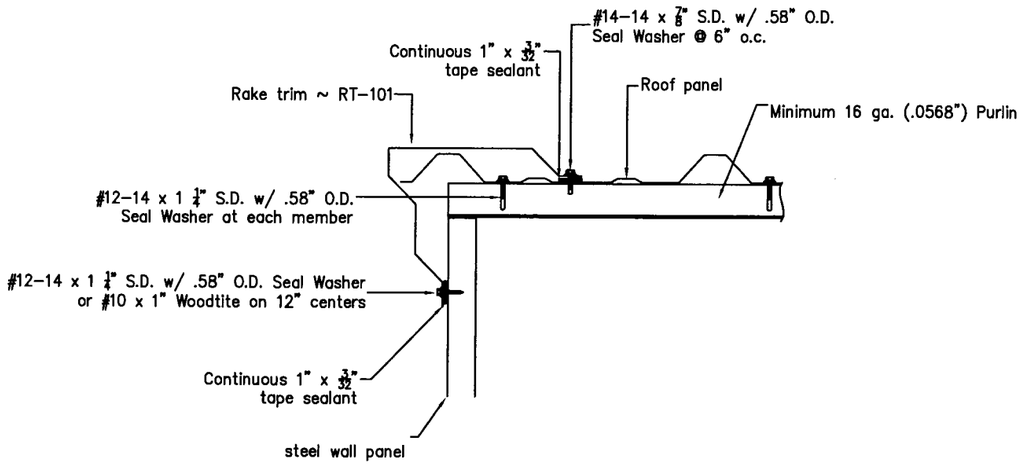

SECTION "A" RAKE

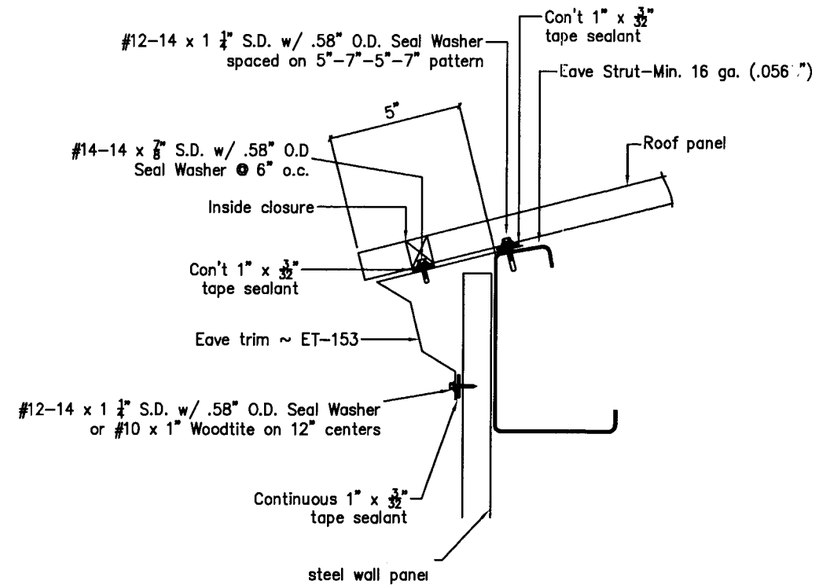

SECTION "B" EAVE

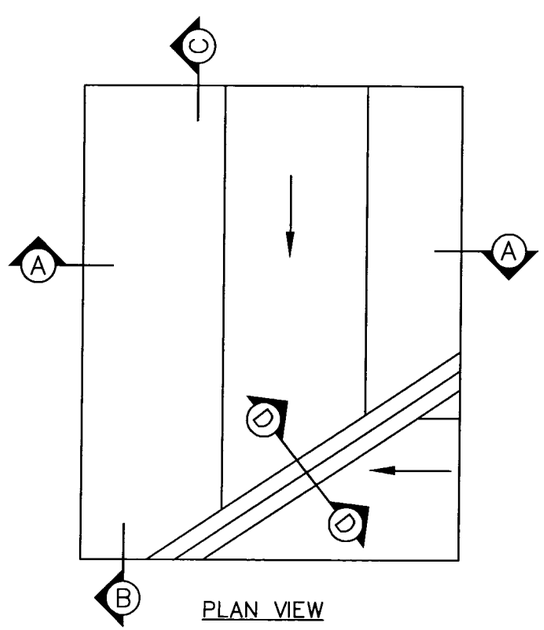

PLAN VIEW

Approved as complying with the
Florida Building Code
Date 05/16/2002
NOA# 02-0222.13
Miami Dade Product Control
Division
By

MANUFACTURING ENGINEER
TERRENCE E. WOLFE, P.E.

FLORIDA REGISTRATION NO.
44923

WHIRLWIND BUILDING SYSTEMS SUPER SPAN 24 GA.

WHIRLWIND BUILDING SYSTEMS
P.O. BOX 75280 • 8234 HANSEN
HOUSTON, TX 77234-5280 • 713-946-7140

REV.	BY	DESCRIPTION	DATE

PROJECT
DADE COUNTY PRODUCT APPROVAL

SHEET TITLE
SUPER SPAN 24 GA. DETAILS

LOCATION
DADE COUNTY, FLORIDA

DRAWN BY:
CHECKED BY:
PROJECT NUMBER

REVISION DATE: 3-26-02
SCALE N.T.S.
DRAWING NUMBER 14003501
SHEET NUMBER 3 of 4

04/01/02

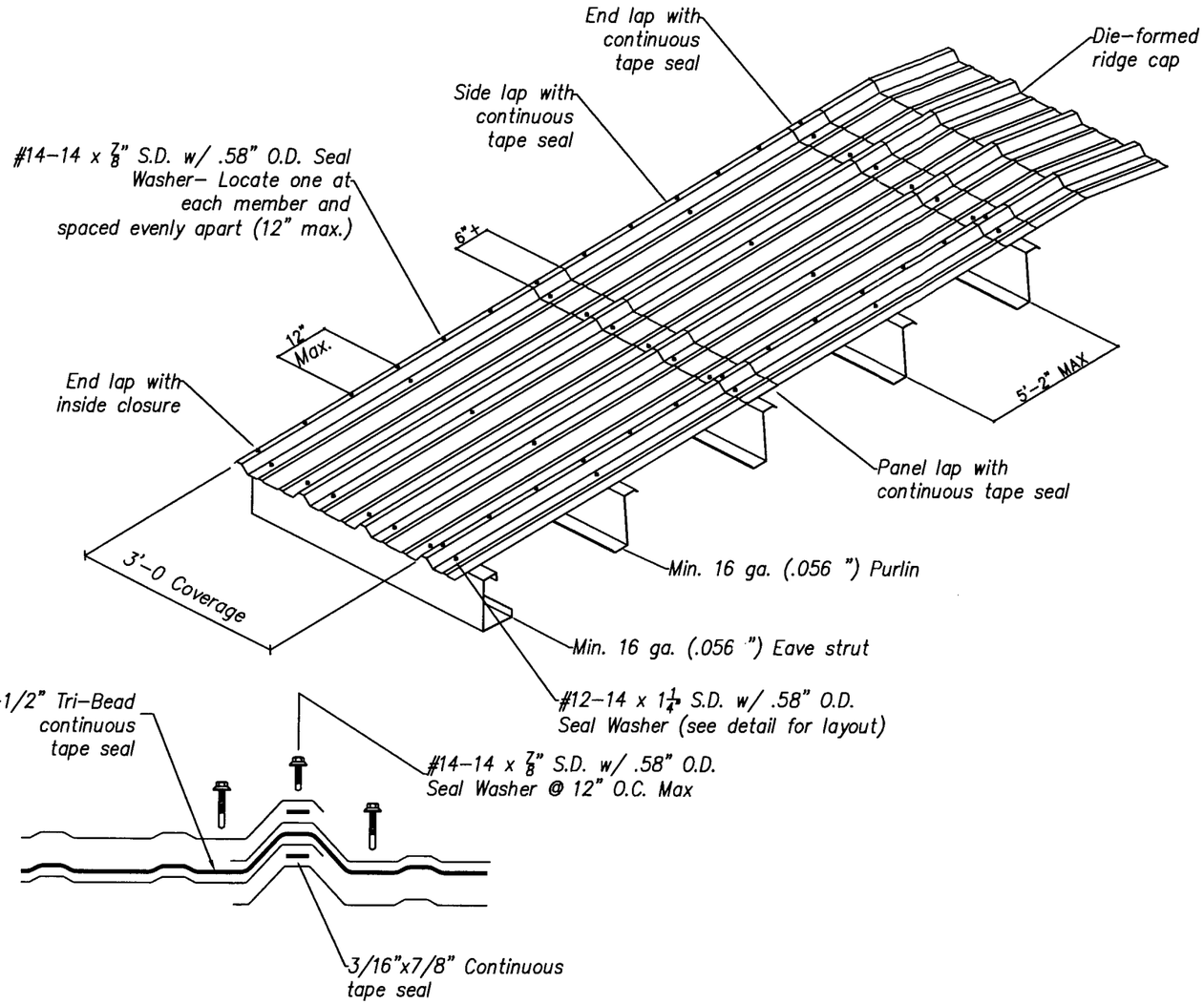

TAPE SEAL AT END LAP AND PANEL LAP

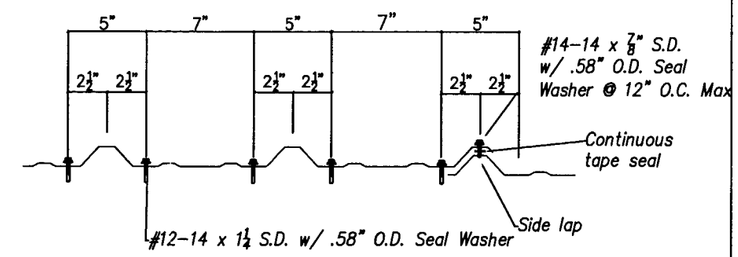

DETAIL AT END LAP AND PANEL LAP

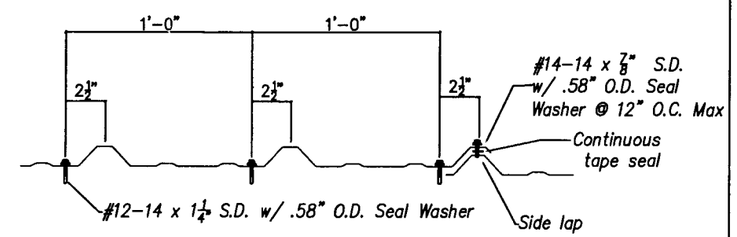

DETAIL AT REMAINING SUPPORTS @ 5'-2" O.C. MAX

Notes:

1. All end laps must be a minimum of 6".
2. Metal shavings must be swept from the roof each day during erection to prevent surface rusting.
3. Tape seal must be applied with no gaps or breaks.
4. Member screws are used to attach the panel to the structurals. Stitch screws are used at the panel to panel attachments. Either of these fasteners may be self-drilling or self-tapping.

Terrence E. Wolfe
04/01/02

Approved as complying with the Florida Building Code
Date 05/16/2002
NOA# 02-0222.13
Miami Dade Product Control Division
By Helena A. Molina

MANUFACTURING ENGINEER	TERRENCE E. WOLFE, P.E.
FLORIDA REGISTRATION NO.	44923
	WHIRLWIND BUILDING SYSTEMS SUPER SPAN 24 GA.
WHIRLWIND BUILDING SYSTEMS P.O. BOX 75280 • 8234 HANSEN HOUSTON, TX 77234-5280 • 713-946-7140	
PROJECT	DADE COUNTY PRODUCT APPROVAL
SHEET TITLE	SUPER SPAN 24 GA. DETAILS
LOCATION	DADE COUNTY, FLORIDA

REV.	BY	DESCRIPTION	DATE

DRAWN BY:		REVISION DATE: 3-26-02	
CHECKED BY:		SCALE N.T.S.	
PROJECT NUMBER		DRAWING NUMBER 14003501	SHEET NUMBER 2 of 4