MIAMI-DADE

BUILDING CODE COMPLIANCE OFFICE (BCCO)
PRODUCT CONTROL DIVISION

MIAMI-DADE COUNTY, FLORIDA
METRO-DADE FLAGLER BUILDING
140 WEST FLAGLER STREET, SUITE 1603
MIAMI, FLORIDA 33130-1563
(305) 375-2901 FAX (305) 375-2908

NOTICE OF ACCEPTANCE (NOA)

W.R. Bonsal Company
8201 Arrowbridge Boulevard
Charlotte, NC 28224-1148

SCOPE:

This NOA is being issued under the applicable rules and regulations governing the use of construction materials. The documentation submitted has been reviewed by Miami-Dade County Product Control Division and accepted by the Board of Rules and Appeals (BORA) to be used in Miami Dade County and other areas where allowed by the Authority Having Jurisdiction (AHJ).

This NOA shall not be valid after the expiration date stated below. The Miami-Dade County Product Control Division (In Miami Dade County) and/or the AHJ (in areas other than Miami Dade County) reserve the right to have this product or material tested for quality assurance purposes. If this product or material fails to perform in the accepted manner, the manufacturer will incur the expense of such testing and the AHJ may immediately revoke, modify, or suspend the use of such product or material within their jurisdiction. BORA reserves the right to revoke this acceptance, if it is determined by Miami-Dade County Product Control Division that this product or material fails to meet the requirements of the applicable building code.

This product is approved as described herein, and has been designed to comply with the High Velocity Hurricane Zone of the Florida Building Code.

DESCRIPTION: Surewall Flex System over PlywoodWall

APPROVAL DOCUMENT: Drawing No. A2, titled "Surewall Flex System over concrete plywood wall", sheets 1 through 1, prepared, signed and sealed by Lawrence Brill, P.E., dated 5/26/99 bearing the Miami-Dade County Product Control Renewal stamp with the Notice of Acceptance number and expiration date by the Miami-Dade County Product Control Division.

MISSILE IMPACT RATING: Large and Small Missile Impact

LABELING: Each unit shall bear a permanent label with the manufacturer's name or logo, city, state and following statement: "Miami-Dade County Product Control Approved", unless otherwise noted herein.

RENEWAL of this NOA shall be considered after a renewal application has been filed and there has been no change in the applicable building code negatively affecting the performance of this product.

TERMINATION of this NOA will occur after the expiration date or if there has been a revision or change in the materials, use, and/or manufacture of the product or process. Misuse of this NOA as an endorsement of any product, for sales, advertising or any other purposes shall automatically terminate this NOA. Failure to comply with any section of this NOA shall be cause for termination and removal of NOA.

ADVERTISEMENT: The NOA number preceded by the words Miami-Dade County, Florida, and followed by the expiration date may be displayed in advertising literature. If any portion of the NOA is displayed, then it shall be done in its entirety.

INSPECTION: A copy of this entire NOA shall be provided to the user by the manufacturer or its distributors and shall be available for inspection at the job site at the request of the Building Official.

This NOA **renews NOA # 99-0421.06** and, consists of this page 1 as well as approval document mentioned above. The submitted documentation was reviewed by **Raul Rodriguez.**

PRODUCT CONTROL ACCEPTED

LEGEND

1. ADHESIVE APPLICATION- SUREWALL FLEX BASE COAT (BC): APPLY BC USING A NOTCHED TROWEL ONTO THE PERIMETER OF THE DRYWALL SURFACE TO A MINIMUM THICKNESS OF 1/16".

2. DETAIL MESH APPLICATION- 4.2 oz/s.y. SUREWALL GLASS MESH: SINGLE LAYER SUREWALL GLASS MESH EMBEDDED INTO BASE COAT. OVERLAP THE SUBSTRATE BY A MIN. OF 2 1/2" WITH MESH.

3. INSULATION APPLICATION- CELLOFOAM EPS, APPROVED 93-0619.1: INSULATION TO BE A THICKNESS OF 3/4" AND A DENSITY VALUE OF 1.0 PCF (NOMINAL)

4. ADHESIVE APPLICATION- SUREWALL FLEX BASE COAT (BC): APPLY BC USING A FLAT TROWEL ONTO EXPOSED SURFACE OF THE CELLOFOAM EPS INSULATION, MINIMUM THICKNESS 1/16"

5. STANDARD MESH APPLICATION- 4.2 oz/s.y. SUREWALL GLASS MESH: EMBED GLASS MESH INTO BC MIXTURE AND FINISH SMOOTH USING A TROWEL. ALL MESH LAP POINTS TO BE A MINIMUM OF 2 1/2" IN ALL FOUR SIDES.

6. FINISH APPLICATION- SUREWALL ELASTOCOAT SAND FINISH: APPLY FINISH USING A TROWEL, NOMINAL THICKNESS 1/16".

7. 16 GAUGE 6 INCH, STEEL "C" STUDS 16 INCH ON CENTER WITH 5/8 INCH EXTERIOR (CD) PLYWOOD MECHANICALLY FASTENED WITH #6 TYPE "S" STEEL± DRYWALL SCREWS. 1 1/4 INCH LENGTH AT 12 INCH ON CENTER IN FIELD AND 6 INCH ON CENTER ON PERIMETER. 1/2 INCH EXTERIOR GYPSUM SHEATHING MECHANICALLY FASTENED THROUGH THE STEEL FRAMING WITH #6 TYPE "S" STEEL DRYWALL SCREWS, 1 3/4 INCH LENGTH ON 12 INCH ON CENTER IN FIELD AND 6 INCH ON CENTER ON PERIMETER.

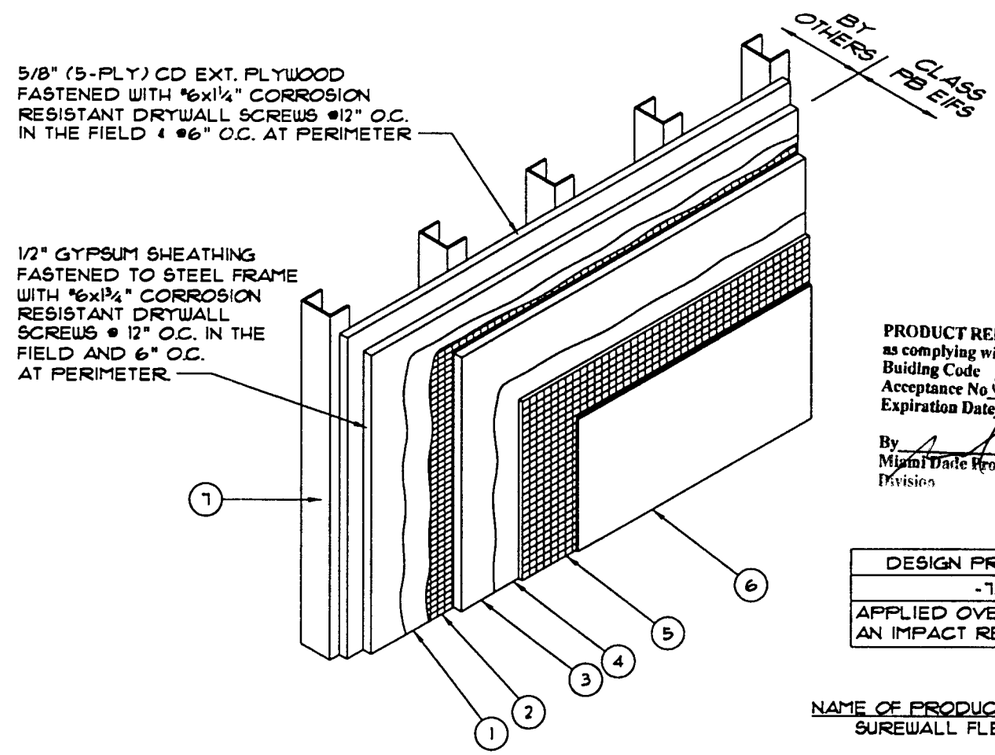

PRODUCT RENEWED
as complying with the Florida Buiding Code
Acceptance No. 02-0225.02
Expiration Date June 6, 2007
By
Miami Dade Product Control Division

DESIGN PRESSURE RATING
-75 PSF
APPLIED OVER PLYWOOD WALL, AN IMPACT RESISTANT SUBSTRATE

NAME OF PRODUCT:
SUREWALL FLEX SYSTEM

DESCRIPTION OF PRODUCT:
CLASS PB (POLYMER BASED) EXTERIOR INSULATION AND FINISH SYSTEM OVER CONCRETE UNIT MASONRY.

GENERAL NOTES:

1. THIS SYSTEM HAS BEEN DESIGNED IN ACCORDANCE WITH THE SOUTH FLORIDA BUILDING CODE 1994 EDITION AND ITS LATEST SUPPLEMENTS.
2. THIS SYSTEM HAS BEEN TESTED IN ACCORDANCE WITH THE DADE COUNTY PROTOCOL PA-202 AND PA-203 FOR STRUCTURAL AND CYCLIC TESTING.
3. THIS SYSTEM SHALL BE APPLIED BY A LISCENSED PLASTERING CONTRACTOR FOLLOWING THIS NOTICE OF ACCEPTANCE, THE RECOMMENDATION OF W.R. BONSAL CO. AND THE APPLICABLE SECTION OF THE SOUTH FLORIDA BUILDING CODE.
4. THE ENGINEER AND/OR ARCHITECT OF RECORD FOR EACH PROJECT USING THIS SYSTEM SHALL SIZE ALL STUD FRAMING WALLS AS REQUIRED BY GOVERNING CODES AND THIS DOCUMENT.
5. INSULATION BOARDS SHALL BE POSITIONED IN A RUNNING BOND PATTERN.
6. ALL STUDS USED WITH THIS SYSTEM SHALL BE COMPLETELY SHEATHED AT THE INTERIOR FLANGE OR BRIDGED AT MAXIMUM EVERY 5' OF STUD LENGTH OR AS SPECIFIED BY STUD MANUFACTURER.
7. ALL STEEL STUDS SHALL BE STRUCTURAL WITH 1-5/8" MIN. FLANGE WIDTH AND HAVE MINIMUM YIELD STRENGTH OF 33,000 PSI.

5-26-99

BRILL & RODRIGUEZ, INC.

PROPERTIES OF CELLOFOAM EPS		
DESCRIPTION	ASTM	PROPERTIES
DENSITY	C-303 OR D-1622	0.90 PCF MIN. 1.0 PCF MAX.
THERMAL RESISTANCE	C-177 OR C-518	3.85 @ 75°F. 4.17 @40°F.
COMP. STRENGTH	D1621	10 -14 PSI
FLEXURAL STRENGTH	C-203	25 - 30 PSI
WATER VAPOR TRANSMISSION	E-96	20 - 50 PERMS - IN
WATER APSORPTION	C-272	LESS THAN 4% BY VOLUME
OXYGEN INDEX	D-2863	24%

APPROVED AS COMPLYING WITH THE SOUTH FLORIDA BUILDING CODE
DATE Jul 5 1999
BY
PRODUCT CONTROL DIVISION
BUILDING CODE COMPLIANCE OFFICE
ACCEPTANCE NO. 99-0421.06

Brill & Rodriguez, Inc.

SUREWALL FLEX SYSTEM OVER PLYWOOD WALL

W.R. BONSAL CO. 8201 ARROWRIDGE BLVD. CHARLOTTE, NC 28244

Date	5-26-99
Drawn by	J.L.R.
Checked by	L.F.B.
Scale	N.T.S.

file number 9547

drawing A2 of 1