MIAMI-DADE

BUILDING CODE COMPLIANCE OFFICE (BCCO)
PRODUCT CONTROL DIVISION

MIAMI-DADE COUNTY, FLORIDA
METRO-DADE FLAGLER BUILDING
140 WEST FLAGLER STREET, SUITE 1603
MIAMI, FLORIDA 33130-1563
(305) 375-2901 FAX (305) 375-2908

NOTICE OF ACCEPTANCE (NOA)

Arch Aluminum & Glass Company
10200 N. W. 67th Street
Tamarac, FL 33321

SCOPE:

This NOA is being issued under the applicable rules and regulations governing the use of construction materials. The documentation submitted has been reviewed by Miami-Dade County Product Control Division and accepted by the Board of Rules and Appeals (BORA) to be used in Miami Dade County and other areas where allowed by the Authority Having Jurisdiction (AHJ).

This NOA shall not be valid after the expiration date stated below. The Miami-Dade County Product Control Division (In Miami Dade County) and/or the AHJ (in areas other than Miami Dade County) reserve the right to have this product or material tested for quality assurance purposes. If this product or material fails to perform in the accepted manner, the manufacturer will incur the expense of such testing and the AHJ may immediately revoke, modify, or suspend the use of such product or material within their jurisdiction. BORA reserves the right to revoke this acceptance, if it is determined by Miami-Dade County Product Control Division that this product or material fails to meet the requirements of the applicable building code.

This product is approved as described herein, and has been designed to comply with the High Velocity Hurricane Zone of the Florida Building Code.

DESCRIPTION: Series IGS 450 EZ Aluminum Storefront System

APPROVAL DOCUMENT: Drawing No. **IGS450-NOA**, dated 11/24/98, with revision #1 dated 05/11/00, titled "IGS450EZ Flush Glaze 1" Insulated Glass", sheets 1 through 4, prepared by manufacturer, signed and sealed by William D. Cook, P.E., bearing the Miami-Dade County Product Control Renewal stamp with the Notice of Acceptance number and expiration date by the Miami-Dade County Product Control Division.

MISSILE IMPACT RATING: None

LABELING: Each unit shall bear a permanent label with the manufacturer's name or logo, city, state and following statement: "Miami-Dade County Product Control Approved", unless otherwise noted herein.

RENEWAL of this NOA shall be considered after a renewal application has been filed and there has been no change in the applicable building code negatively affecting the performance of this product.

TERMINATION of this NOA will occur after the expiration date or if there has been a revision or change in the materials, use, and/or manufacture of the product or process. Misuse of this NOA as an endorsement of any product, for sales, advertising or any other purposes shall automatically terminate this NOA. Failure to comply with any section of this NOA shall be cause for termination and removal of NOA.

ADVERTISEMENT: The NOA number preceded by the words Miami-Dade County, Florida, and followed by the expiration date may be displayed in advertising literature. If any portion of the NOA is displayed, then it shall be done in its entirety.

INSPECTION: A copy of this entire NOA shall be provided to the user by the manufacturer or its distributors and shall be available for inspection at the job site at the request of the Building Official.

This NOA **renews NOA # 00-0526.01** and consists of this page 1 as well as approval document mentioned above. The submitted documentation was reviewed by **Manuel Perez, P.E.**

PRODUCT CONTROL ACCEPTED

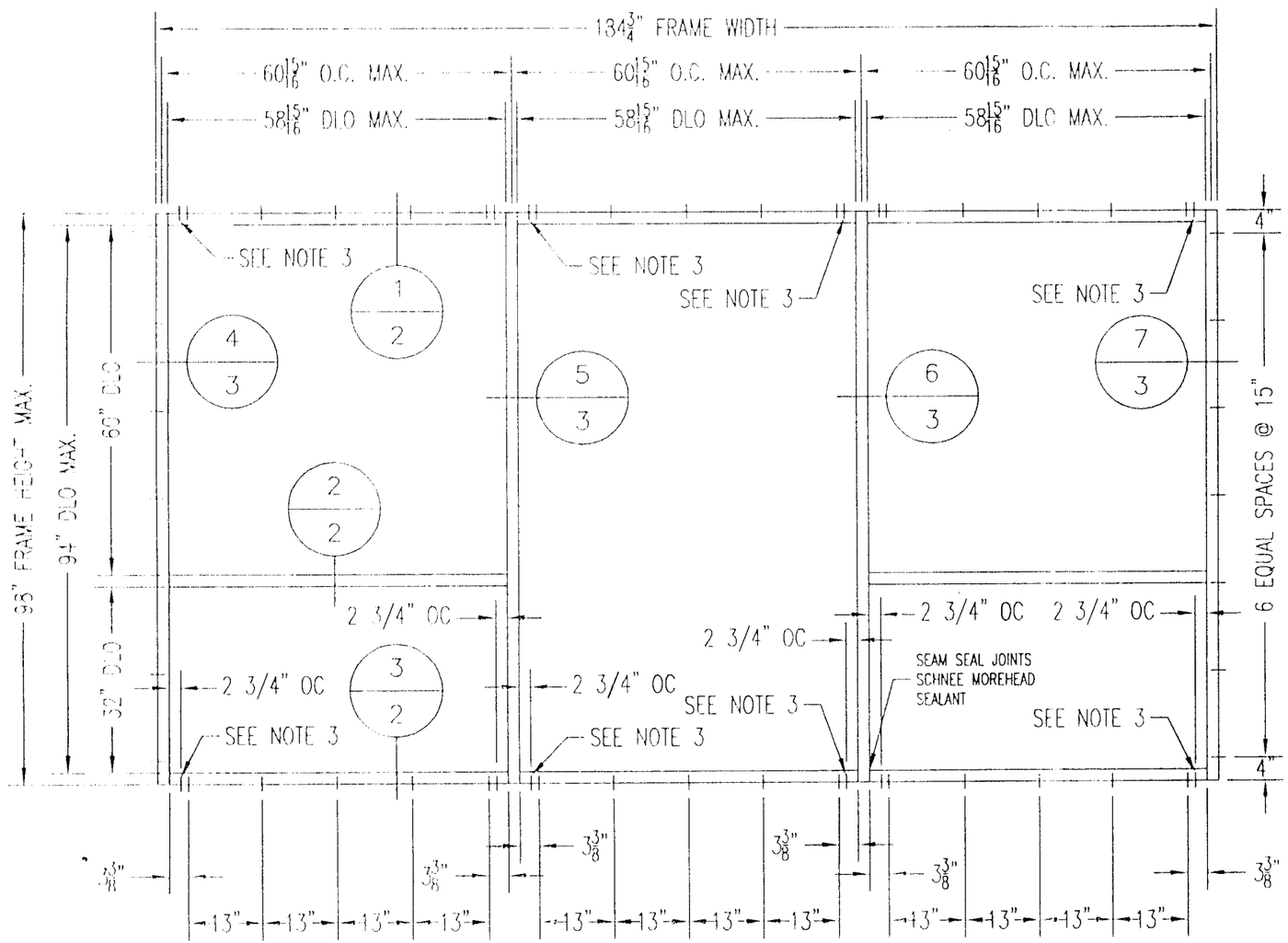

A/1 FRONT ELEVATION
SCALE: 1/2" = 1'

NOTES:

1) DESIGN PRESS. RATING = +65PSF/-65PSF
2) 1" INSULATED GLASS
   1/4" TEMPERED
   1/2" AIR SPACE
   1/4" TEMPERED
3) ADDITIONAL ANCHORS SHOWN:
   TWO #14 ANCHORS ARE REQUIRED FOR WOOD SUBSTRATE AT EACH SIDE OF MULLIONS 2 3/4" O.C. SPACING FROM MULLION; AS WELL AS ONE #14 ANCHOR IS ALSO REQUIRED NEAR JAMBS AT HEAD AND SILL CORNERS 2 3/4" O.C. SPACING FROM CORNERS.
4) MIAMI-DADE APPROVED SHUTTERS ARE REQUIRED, FOR INSTALLATION OF THIS SYSTEM AT ANY ELEVATION.

PRODUCT RENEWED
ACCEPTANCE No. 02-0304.03
EXPIRATION DATE 04-04-2007
By Manuel Perez
PRODUCT CONTROL DIVISION
BUILDING CODE COMPLIANCE OFFICE

APPROVED AS COMPLYING WITH THE SOUTH FLORIDA BUILDING CODE
DATE September 28, 2000
BY Manuel Perez
PRODUCT CONTROL DIVISION
BUILDING CODE COMPLIANCE OFFICE
No. 00-0526.01

Aluminum & Glass Co., Inc.
10200 NORTHWEST 67TH STREET
TAMARAC, FL 33321
800-432-8132

SIGNING ENGINEER	
NAME: WILLIAM D. COOK P.E.	
DISCIPLINE: STRUCTURAL ENG.	
REGISTRATION NO.: 43904	
ADDRESS: A.L. BROMLEY P.E. INC. 2004 NE 49TH STREET FT. LAUDERDALE, FL.	5/15/00

DRAWING DESCRIPTION:	DRAWN BY:	DATE:
IGS450EZ FLUSH GLAZE 1" INSULATED GLASS	ANC	11/24/98
	REVISION	DATE
	1	05/11/00
REPORT #1 LAB #2082 FILE #98-105 / REPORT #2 LAB #2115 FILE #98-105	DRAWING NO. IGS450-NOA	SHEET NO. 1 OF 4

DRAWING NO.	SHEET NO.	L	R
IGS450-NOA	1 OF 4		

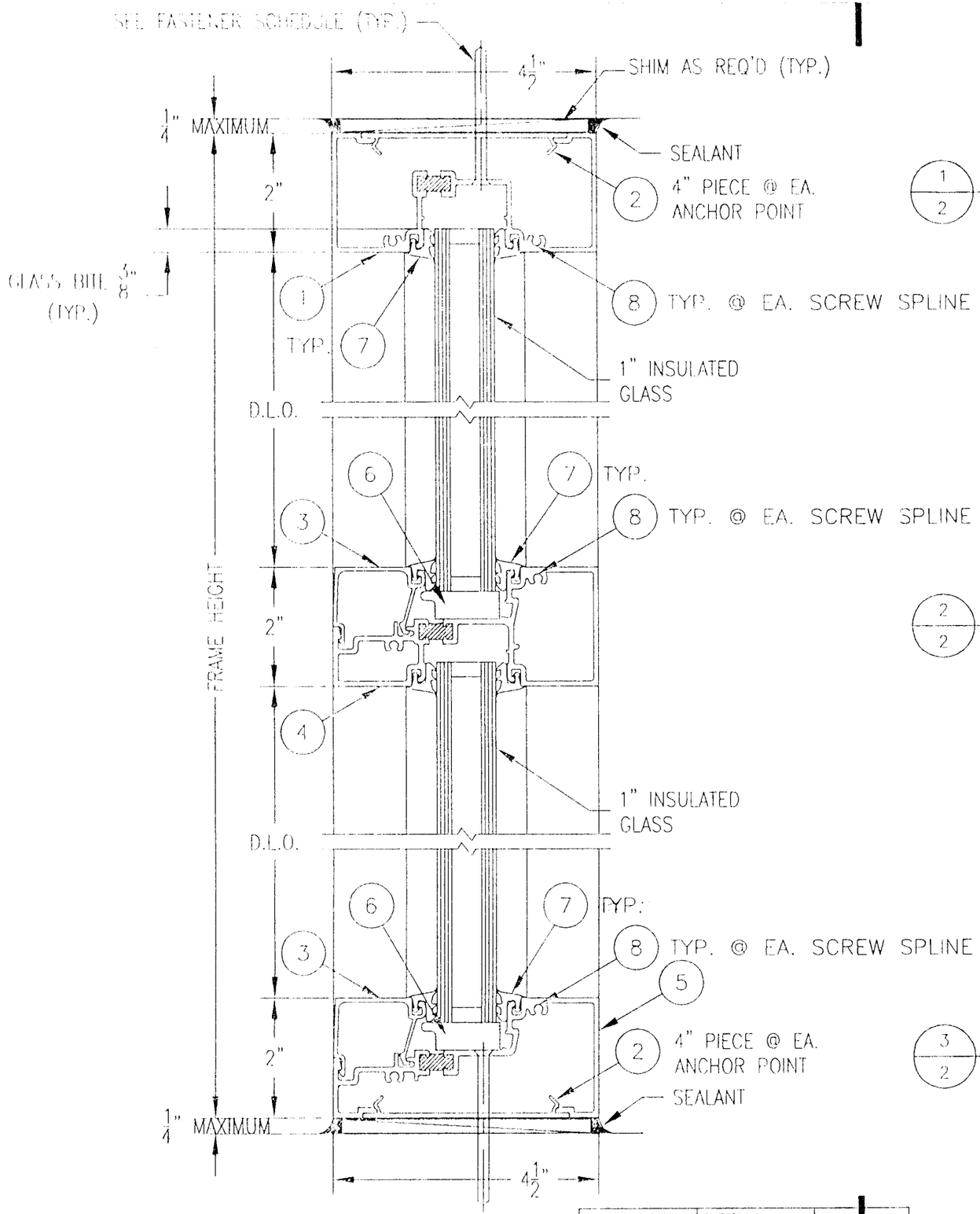

1/2 FRAME HEAD DETAIL
SCALE: 1/2" = 1"

2/2 INTERM. HORIZ. DETAIL
SCALE: 1/2" = 1"

3/2 FRAME SILL DETAIL
SCALE: 1/2" = 1"

NOTE:
1) SEE PAGE 4 FOR TYPICAL FASTENER SCHEDULE.

PRODUCT RENEWED
ACCEPTANCE No. 02-0304.03
EXPIRATION DATE 04/04/2007
By Manuel Perez
PRODUCT CONTROL DIVISION
BUILDING CODE COMPLIANCE OFFICE

APPROVED AS COMPLYING WITH THE SOUTH FLORIDA BUILDING CODE
DATE September 28, 2000
BY Manuel Perez
PRODUCT CONTROL DIVISION
BUILDING CODE COMPLIANCE OFFICE
APPROVAL NO. 00-0526.01

Aluminum & Glass Co., Inc.
10200 NORTHWEST 67TH STREET
TAMARAC, FL 33321
800-432-8132

SIGNING ENGINEER	
NAME: WILLIAM D. COOK P.E.	
DISCIPLINE: STRUCTURAL ENG.	
REGISTRATION NO.: 43904	
ADDRESS: A.L. BROMLEY P.E. INC. 2004 NE 49TH STREET FT. LAUDERDALE, FL.	3/15/00
DRAWING DESCRIPTION: IGS450EZ FLUSH GLAZE 1" INSULATED GLASS	DRAWN BY: ANC / DATE: 11/24/98
	REVISION: V / DATE: 05/11/00
REPORT #1 LAB #2082 FILE #98-105 / REPORT #2 LAB #2115 FILE #98-105	DRAWING NO. IGS450-NOA / SHEET NO. 2 OF 4

DRAWING NO.	SHEET NO.	L	R
IGS450-NOA	2 OF 4		

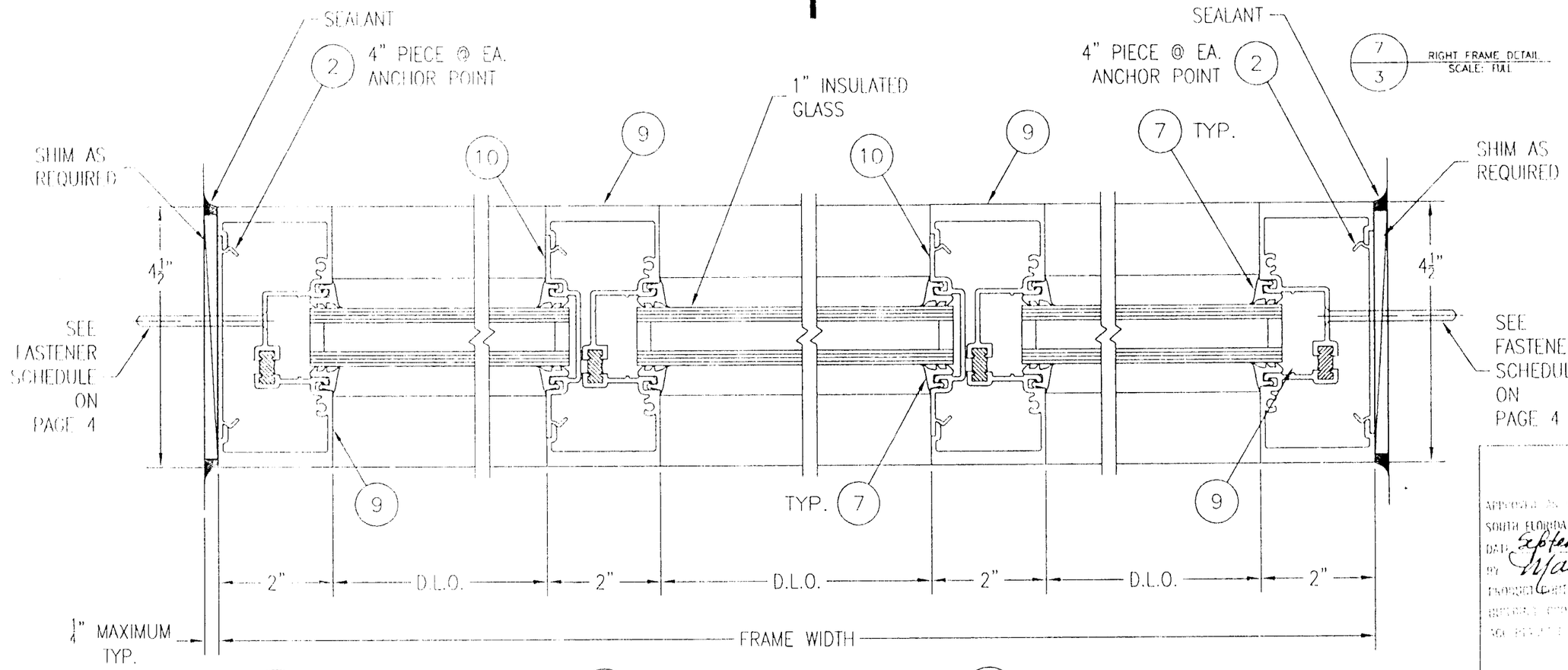

7/3 RIGHT FRAME DETAIL SCALE: FULL

4/3 LEFT FRAME DETAIL SCALE: HALF

5/3 LEFT INTERM. DETAIL SCALE: HALF

6/3 RIGHT INTERM. DETAIL SCALE: HALF

APPROVED AS COMPLYING WITH THE SOUTH FLORIDA BUILDING CODE
DATE September 28, 2000
BY Manuel Sera
PRODUCT CONTROL DIVISION
BUILDING AND COMPLIANCE OFFICE
NOA NO. 00-0526.01

PRODUCT RENEWED
ACCEPTANCE No. 02-0304.03
EXPIRATION DATE 04/04/2007
By Manuel Sera
PRODUCT CONTROL DIVISION
BUILDING CODE COMPLIANCE OFFICE

Aluminum & Glass Co., Inc.
10200 NORTHWEST 67TH STREET
TAMARAC, FL 33321
800-432-8132

SIGNING ENGINEER
NAME: WILLIAM D. COOK P.E.
DISCIPLINE: STRUCTURAL ENG.
REGISTRATION NO.: 43904
ADDRESS: A.L. BROMLEY P.E. INC. 2004 NE 49TH STREET FT. LAUDERDALE, FL.

5/11/00

DRAWING DESCRIPTION:
IGS450EZ
FLUSH GLAZE
1" INSULATED GLASS

REPORT #1	REPORT #2
LAB #2082	LAB #2115
FILE #98-105	FILE #98-105

DRAWN BY:	DATE:
ANC	11/24/98
REVISION	DATE
V	05/11/00
DRAWING NO.	SHEET NO.
IGS450-NOA	3 OF 4

DRAWING NO.	SHEET NO.	L	R
IGS450-NOA	3 OF 4		

PARTS LIST

ITEM NO.	PART OR IDENTIFYING NO.	NOMENCLATURE OR DESCRIPTION	MANUFACTURER NAME	MATERIAL SPECIFICATION
1	40869	OPEN BACK HEADER/JAMB	ARCH ALUMINUM & GLASS CO.	6063-T5
2	4008	FLAT FILLER INSERT; 4" LONG	ARCH ALUMINUM & GLASS CO.	6063-T5
3	40748	GLASS STOP	ARCH ALUMINUM & GLASS CO.	6063-T5
4	40850	INTERMEDIATE HORIZONTAL	ARCH ALUMINUM & GLASS CO.	6063-T5
5	40849	OPEN BACK SILL	ARCH ALUMINUM & GLASS CO.	6063-T5
6	38693	1" GLAZING SETTING BLOCK - 1/4" X 1" X 2"	UNIVERSAL RUBBER CO.	EPDM
7	H-63	GLAZING GASKET	UNIVERSAL RUBBER CO.	EPDM 70 ±5
8	S-11	#10 X 1 3/4" PHSMS	ARCH ALUMINUM & GLASS CO.	CAD PLATED STEEL
9	40893	OPEN BACK HEADER/JAMB	ARCH ALUMINUM & GLASS CO.	6063-T5
10	42407	INSERT FOR OPEN BACK 1" GLAZING POCKET	ARCH ALUMINUM & GLASS CO.	6063-T5

PRODUCT RENEWED

ACCEPTANCE No. 02-0304-03

EXPIRATION DATE 04/04/2007

By Manuel Perez

PRODUCT CONTROL DIVISION
BUILDING CODE COMPLIANCE OFFICE

APPROVED AS COMPLYING WITH THE SOUTH FLORIDA BUILDING CODE
DATE September 28, 2000
BY Manuel Perez
PRODUCT CONTROL DIVISION
BUILDING CODE COMPLIANCE OFFICE
ACCEPTANCE No. 00-0526.01

FASTENER SCHEDULE

INTO WOOD:
#14 X 2 3/4" FLAT HEAD WOOD SCREWS MIN. EMBED 1 1/2". (2) ANCHORS REQUIRED AT JAMB END AND EACH SIDE OF MULLION, ONE AT 2 3/4" O.C. AND ONE @ 3 3/8" O.C. FROM ENDS AND EACH SIDE OF MULLIONS, REMAINING SCREWS @ 13" OC. MAX. FOR HEAD AND SILL. JAMBS TO BE @ 4" FROM END AND 15" OC. MAX.

INTO MASONRY:
1/4 X 2 3/4" FLAT HEAD TAPCONS MIN. EMBED 1 1/2" @ 3 3/8" FROM ENDS AND EACH SIDE OF MULLIONS, REMAINING SCREWS @ 13" OC. MAX. FOR HEAD AND SILL. JAMBS TO BE @ 4" FROM END AND 15" OC. MAX.

INTO STEEL:
12 GA MIN.- #14 X 2 1/2" SELF DRILLING SHEET METAL SCREWS @ 3 3/8" FROM ENDS AND EACH SIDE OF MULLIONS, REMAINING SCREWS @ 13" OC. MAX. FOR HEAD AND SILL. JAMBS @ 4" FROM END AND 15" OC. MAX.

Aluminum & Glass Co., Inc.
10200 NORTHWEST 67TH STREET
TAMARAC, FL 33321
800-432-8132

SIGNING ENGINEER
NAME: WILLIAM D. COOK P.E.
DISCIPLINE: STRUCTURAL ENG.
REGISTRATION NO.: 43904
ADDRESS:
A.L. BROMLEY P.E. INC.
2004 NE 49TH STREET
FT. LAUDERDALE, FL.

5/15/00

DRAWING DESCRIPTION:
IGS450EZ
FLUSH GLAZE
1" INSULATED GLASS

REPORT #1 LAB #2082 FILE #98-105
REPORT #2 LAB #2115 FILE #98-105

DRAWN BY:	DATE:
ANC	11/24/98
REVISION	DATE
V	05/11/00
DRAWING NO.	SHEET NO.
IGS450-NOA	4 OF 4

DRAWING NO.	SHEET NO.	L	R
IGS450-NOA	4 OF 4		