MIAMI-DADE

BUILDING CODE COMPLIANCE OFFICE (BCCO)
PRODUCT CONTROL DIVISION

MIAMI-DADE COUNTY, FLORIDA
METRO-DADE FLAGLER BUILDING
140 WEST FLAGLER STREET, SUITE 1603
MIAMI, FLORIDA 33130-1563
(305) 375-2901 FAX (305) 375-2908

NOTICE OF ACCEPTANCE (NOA)

EFCO Corporation
P.O. Box 609
1000 County Road
Monett, MO 65708-0609

SCOPE:

This NOA is being issued under the applicable rules and regulations governing the use of construction materials. The documentation submitted has been reviewed by Miami-Dade County Product Control Division and accepted by the Board of Rules and Appeals (BORA) to be used in Miami Dade County and other areas where allowed by the Authority Having Jurisdiction (AHJ).

This NOA shall not be valid after the expiration date stated below. The Miami-Dade County Product Control Division (In Miami Dade County) and/or the AHJ (in areas other than Miami Dade County) reserve the right to have this product or material tested for quality assurance purposes. If this product or material fails to perform in the accepted manner, the manufacturer will incur the expense of such testing and the AHJ may immediately revoke, modify, or suspend the use of such product or material within their jurisdiction. BORA reserves the right to revoke this acceptance, if it is determined by Miami-Dade County Product Control Division that this product or material fails to meet the requirements of the applicable building code.

This product is approved as described herein, and has been designed to comply with the High Velocity Hurricane Zone of the Florida Building Code.

DESCRIPTION: Series 5600 – 7" Deep Frame - Aluminum Curtain Wall System – Large Missile Impact

APPROVAL DOCUMENT: Drawing No. **1089**, dated 01/31/02, titled "7" Deep Series 5600 Large Missile Impact Curtain Wall System", sheets 1 through 8, prepared by W. W. Schaefer Engineering & Consulting, P. A. signed and sealed by Warren W. Schaefer, P.E., bearing the Miami-Dade County Product Control Renewal stamp with the Notice of Acceptance number and expiration date by the Miami-Dade County Product Control Division.

MISSILE IMPACT RATING: Large and Small Missile Impact Resistant

LABELING: Each unit shall bear a permanent label with the manufacturer's name or logo, city, state and following statement: "Miami-Dade County Product Control Approved", unless otherwise noted herein.

RENEWAL of this NOA shall be considered after a renewal application has been filed and there has been no change in the applicable building code negatively affecting the performance of this product.

TERMINATION of this NOA will occur after the expiration date or if there has been a revision or change in the materials, use, and/or manufacture of the product or process. Misuse of this NOA as an endorsement of any product, for sales, advertising or any other purposes shall automatically terminate this NOA. Failure to comply with any section of this NOA shall be cause for termination and removal of NOA.

ADVERTISEMENT: The NOA number preceded by the words Miami-Dade County, Florida, and followed by the expiration date may be displayed in advertising literature. If any portion of the NOA is displayed, then it shall be done in its entirety.

INSPECTION: A copy of this entire NOA shall be provided to the user by the manufacturer or its distributors and shall be available for inspection at the job site at the request of the Building Official.
This NOA consists of this page 1 as well as approval document mentioned above.
The submitted documentation was reviewed by **Manuel Perez, P.E.**

PRODUCT CONTROL ACCEPTED

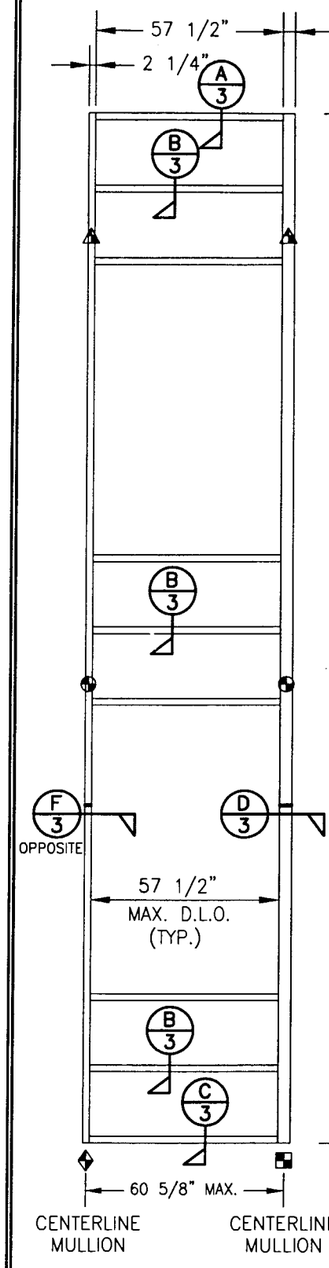

VIEW "A-A"
(EXTERIOR ELEVATION)

ONLY ONE ROW SHOWN; MORE THAN ONE ROW MAY BE INSTALLED

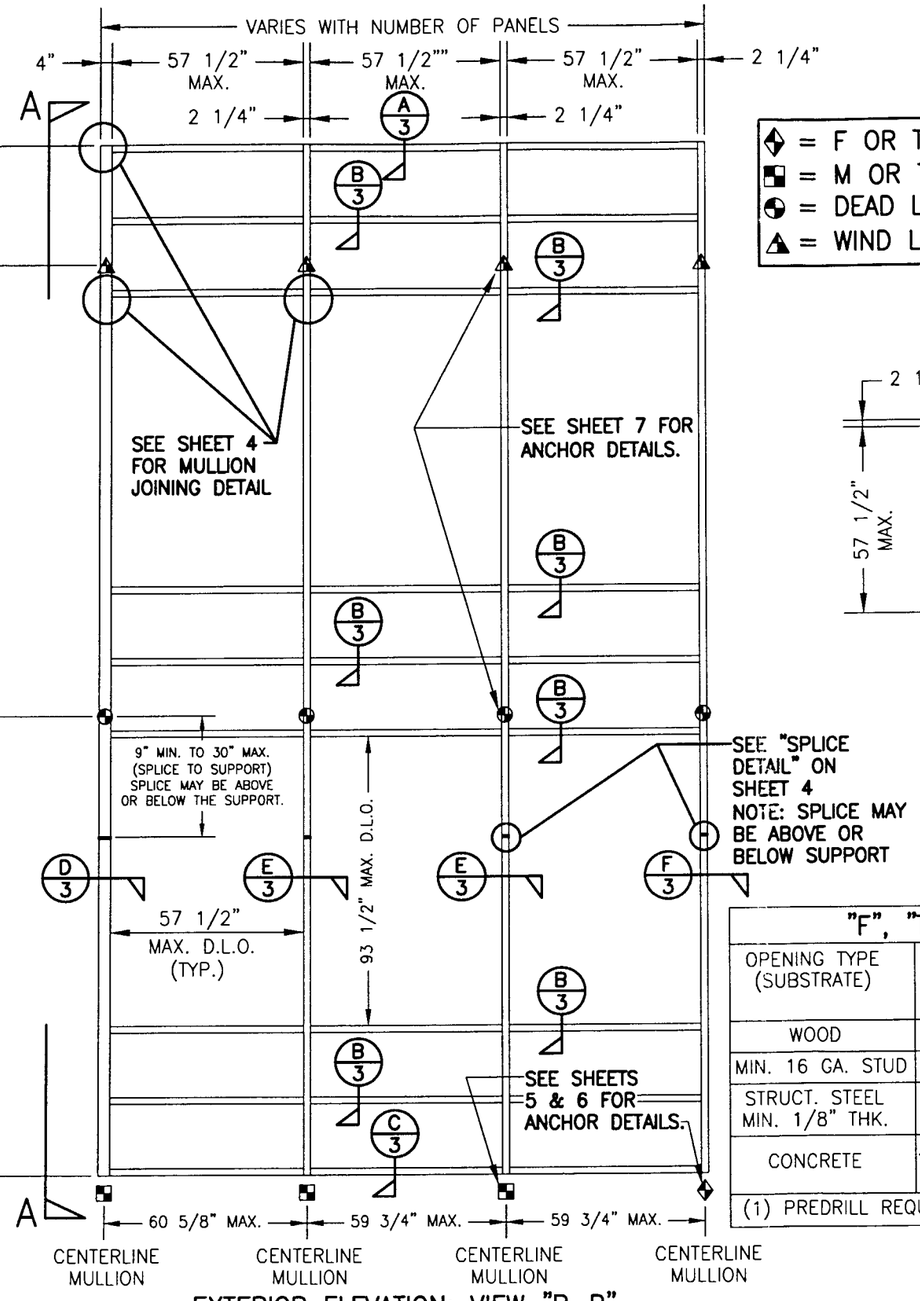

EXTERIOR ELEVATION; VIEW "B-B"
CURTAIN WALL WITH MULTIPLE VERTICAL SPANS

SCALE: N.T.S.

NOTE: THIS ELEVATION SHOWS THE 5600 CURTAIN WALL SYSTEM IN A MULTI-STORY APPLICATION. THE NUMBER OF FLOORS WITH WHICH THIS SYSTEM MAY BE USED RANGE FROM TWO(2) TO UNLIMITED WITH THE ONLY RESTRICTIONS BEING AS SHOWN ON THE SPAN BETWEEN FLOORS/SUPPORTS AND THE D.L.O. SIZE

◆ = F OR TF ANCHOR
■ = M OR TM ANCHOR
◐ = DEAD LOAD ANCHOR
▲ = WIND LOAD ANCHOR

GENERAL NOTES

1. THESE CURTAIN WALL SYSTEMS HAVE BEEN TESTED, ANALYZED AND APPROVED FOR DESIGN PRESSURES NOT TO EXCEED THOSE SHOWN IN THE "ALLOWABLE DESIGN LOADS" TABLE.
2. BUCKING, OPENINGS & BUCKING FASTENERS MUST BE PROPERLY DESIGNED & INSTALLED TO TRANSFER WIND LOADS TO THE STRUCTURE.
3. ALL HARDWARE & FASTENERS SHALL BE IN ACCORDANCE WITH THESE DRAWINGS & MAY NOT VARY UNLESS SPECIFICALLY MENTIONED ON THE DRAWINGS.
4. THE DETAILS & SPECIFICATIONS SHOWN HEREIN REPRESENT THE PRODUCTS TESTED & PROPOSED FOR WATER, AIR, IMPACT, CYCLIC & UNIFORM STATIC AIR PRESSURE TESTING IN CONFORMANCE WITH DADE COUNTY PROTOCOLS PA 201, 202 & 203 FOR IMPACT REQUIREMENTS.
5. THESE CURTAIN WALL SYSTEMS HAVE BEEN DESIGNED IN ACCORDANCE WITH THE FLORIDA BUILDING CODE (F.B.C.).
6. ALL ANCHORS SHALL BE INSTALLED AS SPECIFIED ON THESE DRAWINGS. SPECIFIED EMBEDMENT TO BASE MATERIAL SHALL BE BEYOND WALL FINISH OR STUCCO.
7. THERE SHALL BE NO LIMIT TO THE NUMBER OF HORIZONTAL & VERTICAL PANELS USED FOR ANY JOB PROVIDING ALL RESTRICTIONS ARE MET PER THE ELEVATIONS.
8. ALL SUBSTRATE SHALL HAVE THE FOLLOWING MINIMUM REQUIREMENTS.
   a) ALL CONCRETE SUBSTRATE SHALL BE MIN. 3000 PSI.
   b) ALL WOOD SUBSTRATE SHALL BE MIN. G = 0.55 DENSITY.
   c) ALL METAL STUD SUBSTRATE SHALL BE MIN. 16 GA. Fy = 50 ksi.
   d) ALL STRUCTURAL STEEL SUBSTRATE SHALL BE MIN. 1/8" THK. Fy = 36 ksi.

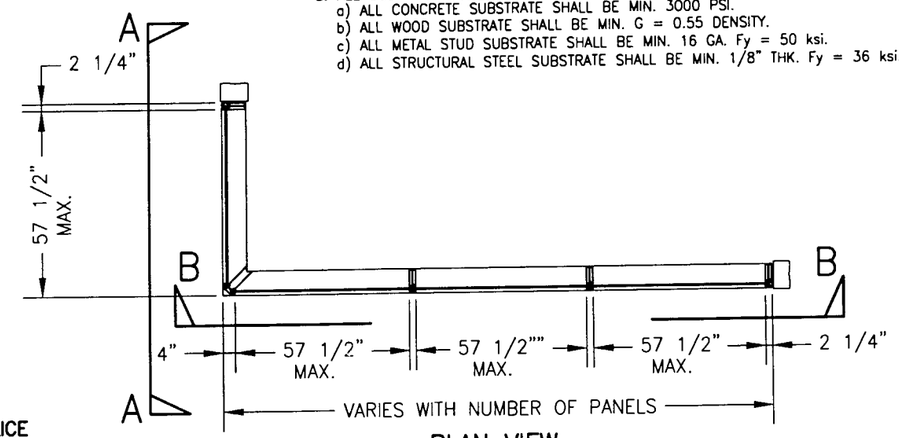

PLAN VIEW
CURTAIN WALL WITH MULTIPLE VERTICAL SPANS

SCALE: 1/4"=1'-0"

"F", "TF", "M" & "TM" ANCHOR FASTENER REQUIREMENTS TABLE

OPENING TYPE (SUBSTRATE)	ANCHOR TO OPENING FASTENER TYPE	NO. FASTENERS PER ANCHOR INTO SUBSTRATE	MINIMUM EMBED	MINIMUM EDGE DIST.
WOOD	(1) 1/2" LAG SCREW	6	3"	1"
MIN. 16 GA. STUD	NO. 14 TEK SCREW	4	FULL	1/2"
STRUCT. STEEL MIN. 1/8" THK.	NO. 14 TEK SCREW	4	FULL	1/2"
CONCRETE	3/8" HILTI KWIK BOLT II S.S. EXPANSION ANCHOR OR 3/8" S.S. RAWL POWER-BOLT	4	2 1/2"	2 1/2"

(1) PREDRILL REQUIRED SIZE HOLES IN WOOD FOR PLACEMENT OF LAG SCREWS.

ALLOWABLE DESIGN LOADS
SEE LOAD TABLES ON SHEET 2

Approved as complying with the Florida Buiding Code
Date June 27 2007
NOA# 02-0308.12
Miami Dade Product Control Division
By Yamil Seres

DRAWN BY: W.W.S.	CHECKED BY: W.W.S.
PLOT: 1=48	DATE: 01/31/02

NO.	REVISION DESCRIPTION	BY	DATE

DRAWING TITLE
7" DEEP SERIES 5600 LARGE MISSILE IMPACT CURTAIN WALL SYSTEM

MANUFACTURER
EFCO CORPORATION
1000 COUNTY ROAD; P.O. BOX 609
MONETT, MO 65708-0609
800-221-4169

CONSULTANTS
W. W. SCHAEFER ENGINEERING & CONSULTING, P.A.
600 SANDTREE DRIVE; SUITE 203B
PALM BEACH GARDENS, FL 33403
PHONE: 561-775-4902 FAX: 561-775-4903

CERTIFICATION
APR 25 2002
WARREN W. SCHAEFER, P.E.
P.E. NO. 44135

DRAWING NO. 1089
REV.
SHEET NO. 1 OF 8

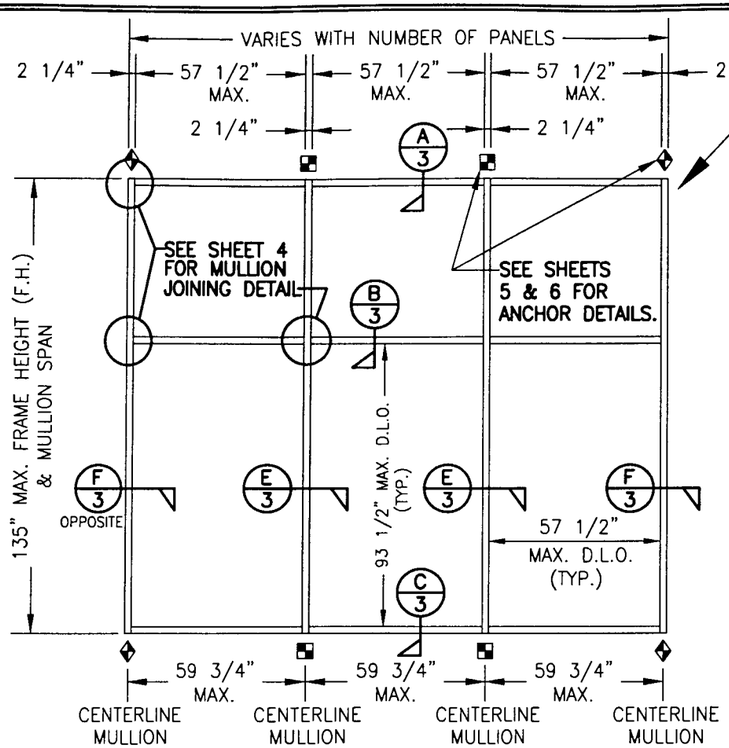

EXTERIOR ELEVATION
CURTAIN WALL WITH SINGLE VERTICAL SPAN

SCALE: 1/4"=1'-0"

NOTE: THIS ELEVATION SHOWS THE 5600 CURTAIN WALL SYSTEM IN A SINGLE SPAN APPLICATION. ALL SINGLE SPAN APPLICATIONS ARE LIMITED BY EACH THE D.L.O. SIZES OF THE LIGHTS & THE HEIGHT/SPAN SHOWN. IF REQUIRED HEIGHT EXCEEDS THAT SHOWN IN THIS ELEVATION, THE SYSTEM MUST BE SUPPORTED AS TWO OR MORE SPANS PER THE MULTIPLE SPAN ELEVATION.

ALLOWABLE DESIGN PRESSURE ON GLASS "A", "B" & "C"

GLASS "A" = 9/16" VIRACON STORM GAURD LAMINATED GLASS (1/4" HT.ST./0.10 SOLUTIA SAFLEX HP/1/4" HT.ST.)
GLASS "B" = 9/16" VIRACON SENTRY GLASS PLUS LAMINATED GLASS (1/4" HT.ST./0.09 SGP/ 1/4" HT.ST.)
GLASS "C" = 9/16" SECURITY SAFGLAS LAMINATED GLASS (1/4" HT.ST./0.015 ADHESIVE/0.07 POLYCARBONATE/0.015 ADHESIVE/1/4" HT.ST.)

+90/−90 PSF

ALLOWABLE DESIGN PRESSURE ON GLASS "D"

1" I.G. GLASS (7/16" LAMINATED HEAT STRENGTHENED SECURITY SAFGLAS AT INBOARD LIGHT, 3/8" AIR GAP AND 3/16" HEAT STRENGTHENED SINGLE PANE GLASS AT OUTBOARD LIGHT)

(1) SHORT D.L.O.	DESIGN LOAD CAPACITY (POSITIVE & NEGATIVE PSF)						
40.5"	90.0	90.0	90.0	90.0	90.0	90.0	90.0
42.5"	90.0	90.0	90.0	90.0	90.0	90.0	88.6
48.5"	90.0	90.0	90.0	87.6	80.6	76.1	74.0
54.5"	90.0	90.0	86.0	79.1	73.6	68.2	65.7
57.5"	90.0	89.9	82.5	76.3	70.4	65.3	63.2
(1) LONG D.L.O.	60.5"	66.5"	72.5"	78.5"	84.5"	90.5"	93.5"

NOTE: THE ELEVATIONS ON THIS SHEET MAY HAVE A 90 DEGREE TURN AS SHOWN ON SHEET 1 ELEVATION OF THE MULTI-SPAN SYSTEM. REF. VIEW "A-A" ON SHEET 1 FOR DETAIL.

ALLOWABLE FRAMING DESIGN PRESSURES

WITH REINFORCED VERTICAL MULLIONS

VERTICAL DISTANCE BETWEEN SUPPORTS	HORIZONTAL DISTANCE BETWEEN MULLIONS	ALLOWABLE DESIGN LOAD POSITIVE & NEGATIVE (PSF)
122"	59 3/4"	90.0
126"	54"	90.0
	59 3/4"	81.7
132"	42"	90.0
	48"	88.4
	54"	78.6
	59 3/4"	71.1
135"	42"	90.0
	48"	82.7
	54"	73.5
	59 3/4"	66.4

WITHOUT REINFORCMENT IN MULLIONS

VERTICAL DISTANCE BETWEEN SUPPORTS	HORIZONTAL DISTANCE BETWEEN MULLIONS	ALLOWABLE DESIGN LOAD POSITIVE & NEGATIVE (PSF)
108"	59 3/4"	90.0
120"	42"	90.0
	48"	85.8
	54"	76.3
	59 3/4"	68.9
132"	30"	90.0
	36"	86.0
	42"	73.7
	48"	64.5
	54"	57.3
	59 3/4"	51.8
135"	30"	90.0
	36"	80.4
	42"	68.9
	48"	60.3
	54"	53.6
	59 3/4"	48.4

1. THESE LOADS CONTROL FOR THE FRAMING ONLY. SEE GLASS LOAD TABLE ON THIS SHEET FOR ALLOWABLE LOADS ON GLASS. THE LESSER OF THE GLASS LOAD & THE LOADS IN THIS TABLE SHALL CONTROL AS THE ALLOWABLE LOAD ON THE SYSTEM.
2. THE LOADS IN THIS TABLE ARE APPLICABLE FOR SINGLE & MULTI SPAN SYSTEMS.

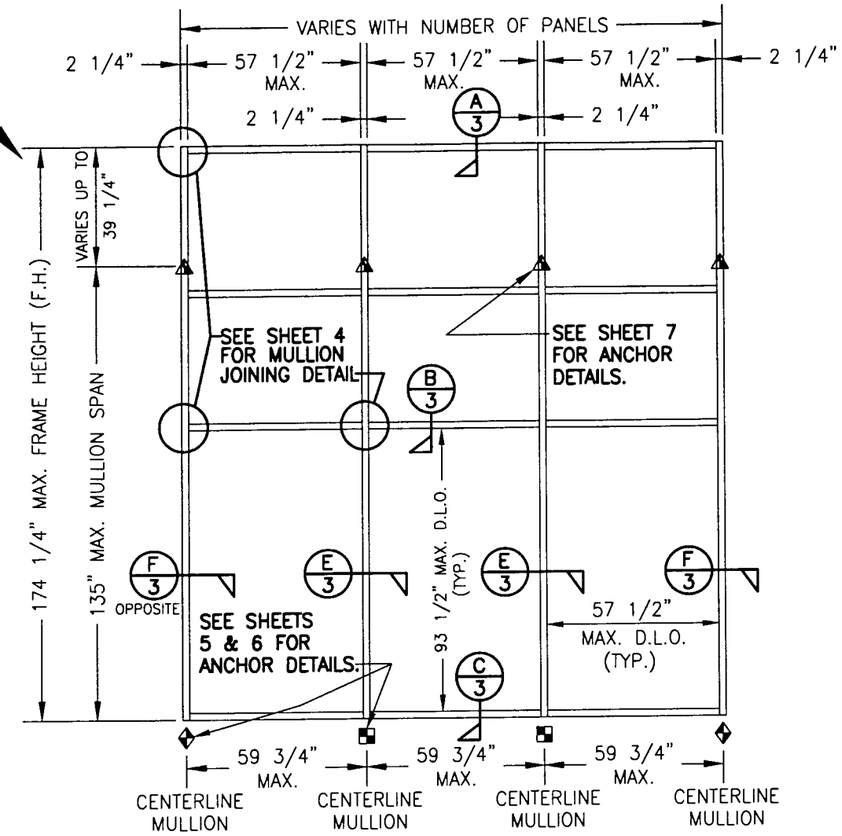

EXTERIOR ELEVATION; CURTAIN WALL WITH SINGLE VERTICAL SPAN AND CANTELEVER

SCALE: 1/4"=1'-0"

NOTE: THIS ELEVATION SHOWS THE 5600 CURTAIN WALL SYSTEM IN A SINGLE SPAN APPLICATION. ALL SINGLE SPAN APPLICATIONS ARE LIMITED BY EACH THE D.L.O. SIZES OF THE LIGHTS & THE HEIGHT/SPAN SHOWN. IF REQUIRED HEIGHT EXCEEDS THAT SHOWN IN THIS ELEVATION, THE SYSTEM MUST BE SUPPORTED AS TWO OR MORE SPANS PER THE MULTIPLE SPAN ELEVATION.

◆ = F OR TF ANCHOR
■ = M OR TM ANCHOR
◐ = DEAD LOAD ANCHOR
◭ = WIND LOAD ANCHOR

Approved as complying with the Florida Building Code
Date June 27 2002
NOA# 02-0308.12
Miami Dade Product Control Division
By Manuel Perez

DRAWN BY: W.W.S.	CHECKED BY: W.W.S.
PLOT: 1=48	DATE: 01/31/02

NO.	REVISION DESCRIPTION	BY	DATE

DRAWING TITLE
7" DEEP SERIES 5600 LARGE MISSILE IMPACT CURTAIN WALL SYSTEM

MANUFACTURER
EFCO CORPORATION
1000 COUNTY ROAD; P.O. BOX 609
MONETT, MO 65708-0609
800-221-4169

CONSULTANTS
W. W. SCHAEFER ENGINEERING & CONSULTING, P.A.
600 SANDTREE DRIVE; SUITE 203B
PALM BEACH GARDENS, FL 33403
PHONE: 561-775-4902 FAX: 561-775-4903

CERTIFICATION
APR 25 2002
WARREN W. SCHAEFER, P.E.
P.E. NO. 44135

DRAWING NO. 1089
REV.
SHEET NO. 2 OF 8

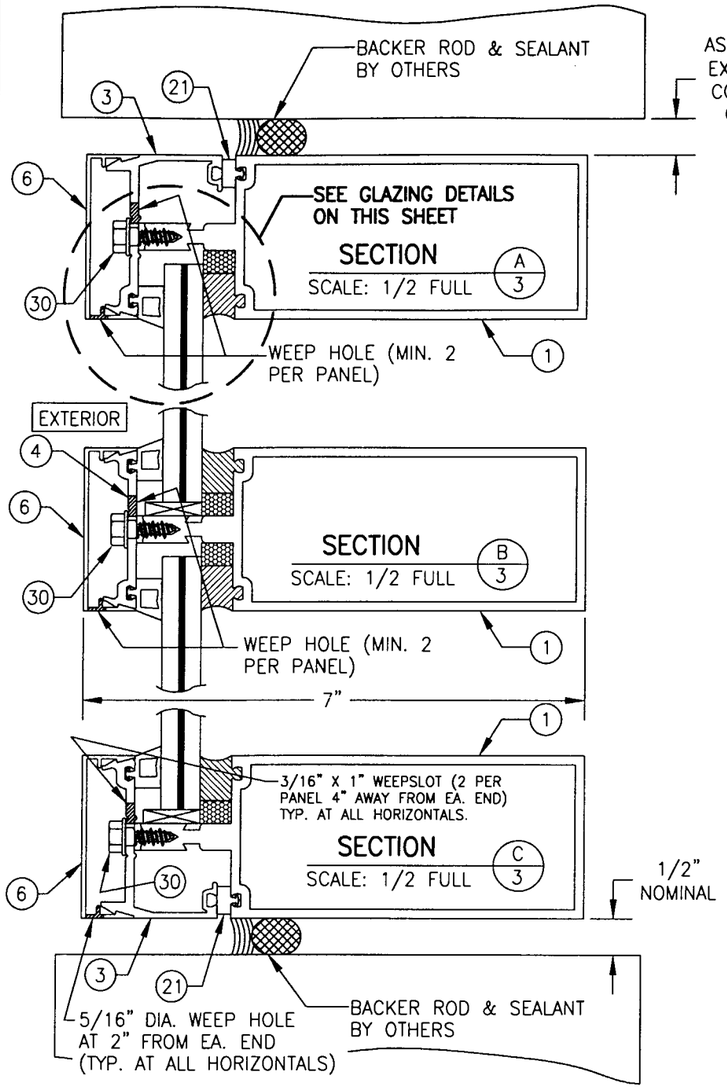

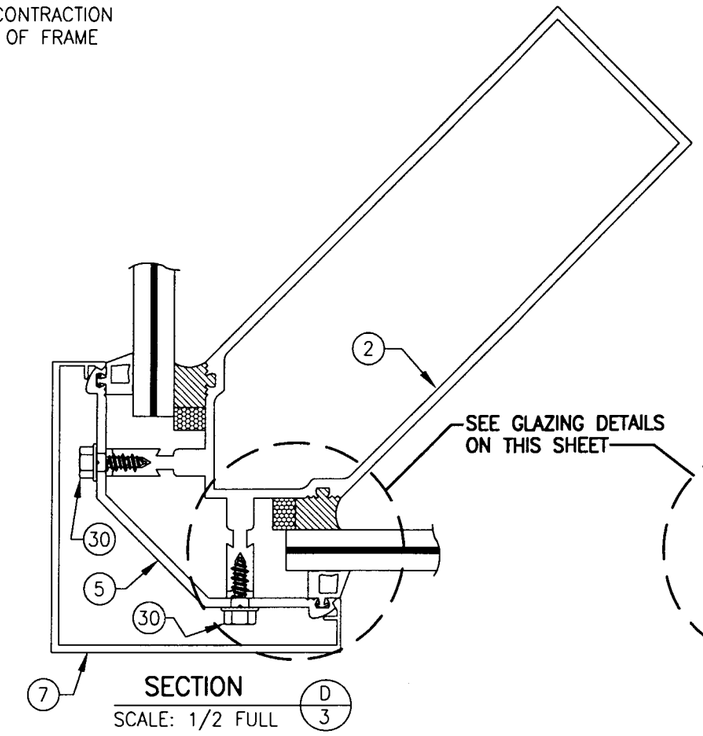

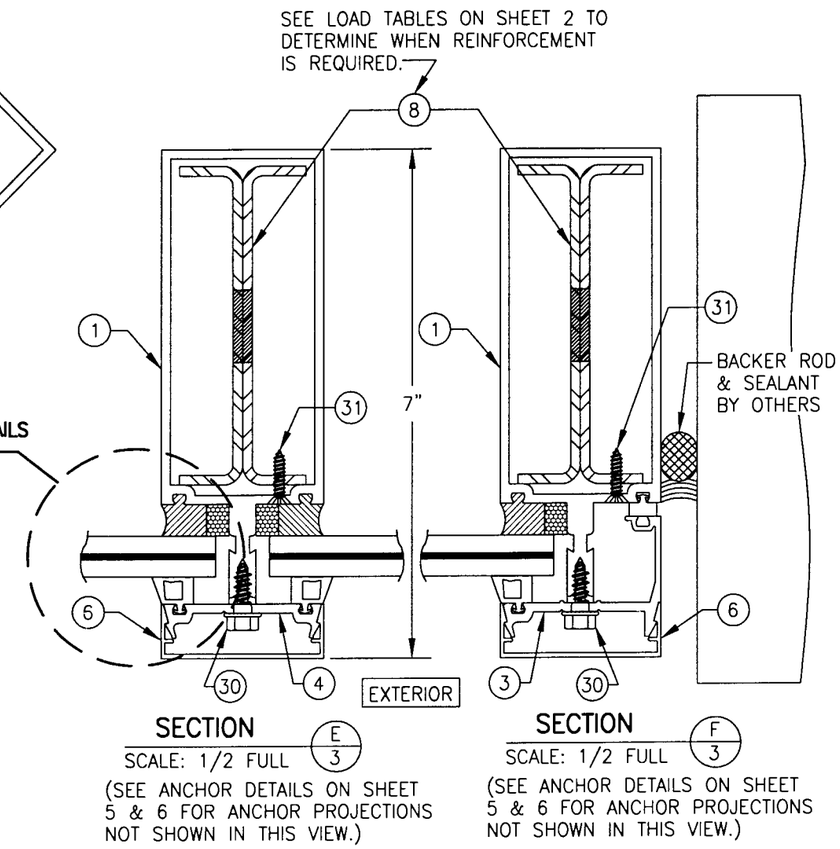

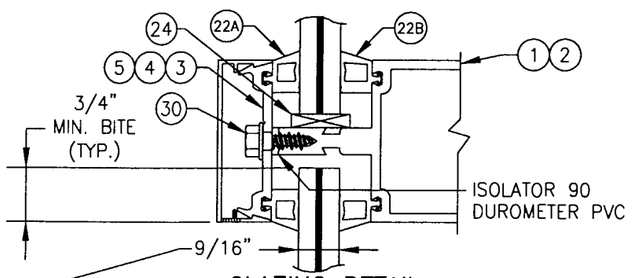

GLAZING DETAIL (LAMINATED GLASS WITH DRY/DRY GLAZING)

GLASS "C": 9/16" SECURITY GLASS SAF-GLAS: 1/4" HT. ST./0.011 ALIPHATIC URETHANE/0.07 POLYCARBONATE/0.011 ALIPHATIC URETHANE/1/4" HT. ST.

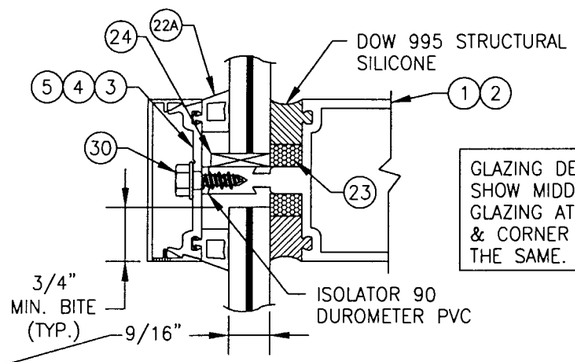

GLAZING DETAILS SHOWN SHOW MIDDLE MULLIONS. GLAZING AT EDGE MULLIONS & CORNER MULLIONS IS THE SAME.

GLAZING DETAIL (LAMINATED GLASS WITH DRY/WET GLAZING)

GLASS "A": 9/16" VIRACON STORM GAURD: 1/4" HT. ST./0.10 SOLUTIA SAFLEX HP/1/4" HT. ST.
GLASS "B": 9/16" VIRACON SENTRY GLASS PLUS (SGP): 1/4" HT. ST./ 0.09 SGP/1/4" HT. ST.

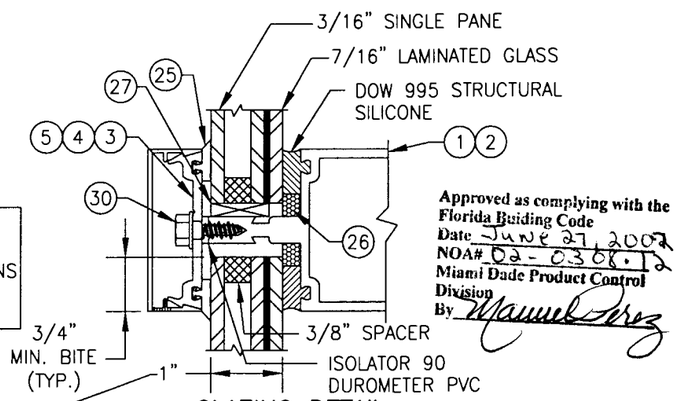

Approved as complying with the Florida Buiding Code
Date June 27, 2002
NOA# 02-0308.12
Miami Dade Product Control Division
By Manuel Perez

GLAZING DETAIL (LAMINATED I.G. GLASS WITH DRY/WET GLAZING)

GLASS "D": 1" I.G. GLASS: 7/16" SECURITY SAF-GLAS AT INBOARD LIGHT, 3/8" AIR GAP & 3/16" HT. ST. SINGLE PANE GLASS AT OUTBOARD LIGHT (7/16" SAF-GLAS = 3/16" HT. ST./0.011 ALIPHATIC URETHANE/0.07 POLYCARBONATE/0.011 ALIPHATIC URETHANE/3/16" HT. ST.

DRAWN BY: W.W.S.	CHECKED BY: W.W.S.
PLOT: 1=2	DATE: 01/31/02

NO.	REVISION DESCRIPTION	BY	DATE

DRAWING TITLE
7" DEEP SERIES 5600 LARGE MISSILE IMPACT CURTAIN WALL SYSTEM

MANUFACTURER
EFCO CORPORATION
1000 COUNTY ROAD; P.O. BOX 609
MONETT, MO 65708-0609
800-221-4169

CONSULTANTS
W. W. SCHAEFER ENGINEERING & CONSULTING, P.A.
600 SANDTREE DRIVE; SUITE 203B
PALM BEACH GARDENS, FL 33403
PHONE: 561-775-4902 FAX: 561-775-4903

CERTIFICATION
APR 25 2002
WARREN W. SCHAEFER, P.E.
P.E. NO. 44135

DRAWING NO. 1089 REV.

SHEET NO. 3 OF 8

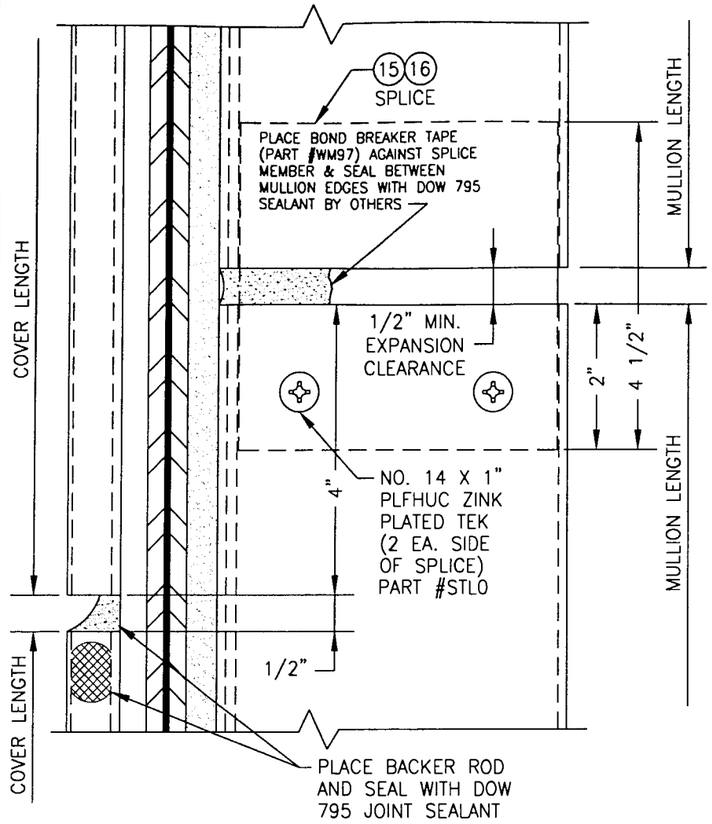

MULLION SPLICE DETAIL

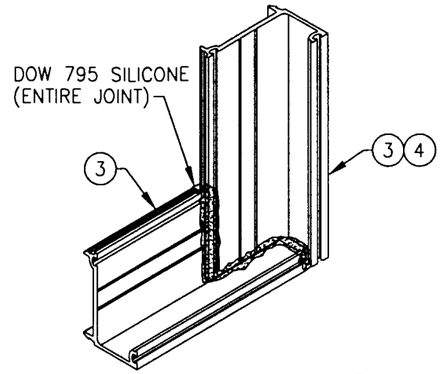

PRESSURE PLATE JOINT (TYP. AT CORNERS)

SIMILAR AT MID MULLION ENDS EXCEPT THAT THE HORIZONTAL PRESSURE PLATES SEAM TOGETHER AT THE MULLION CENTERLINE WITH A 1/8" SEAM SEALED WITH DOW 795 SILICONE.

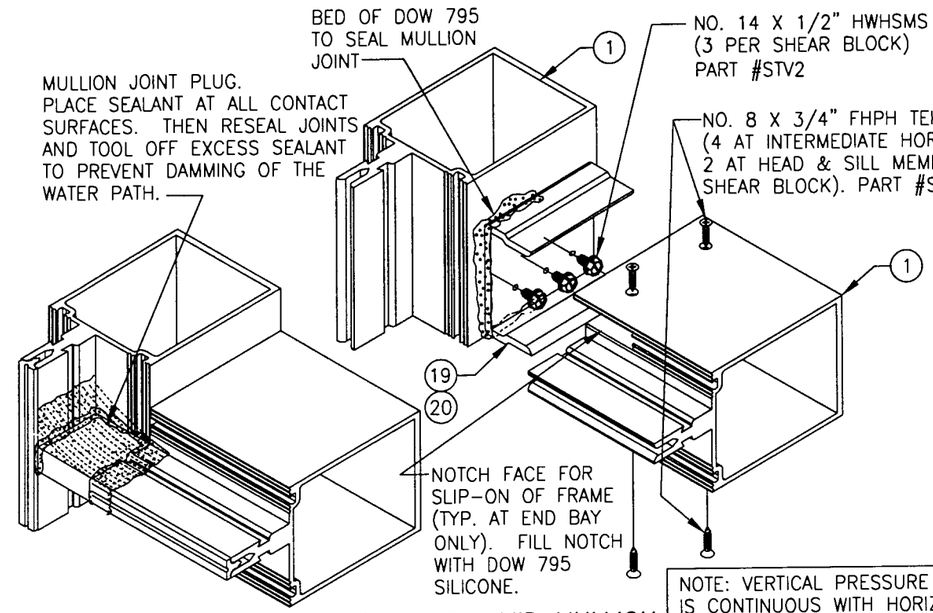

HORIZONTAL MID MULLION TO VERTICAL MULLION

NOTE: VERTICAL PRESSURE PLATE IS CONTINUOUS WITH HORIZONTAL PRESSURE PLATES BUTTING AGAINST THE VERTICAL AND SEALED AT SEAM WITH DOW 795 SILICONE (PRESSURE PLATES NOT SHOWN FOR CLARITY).

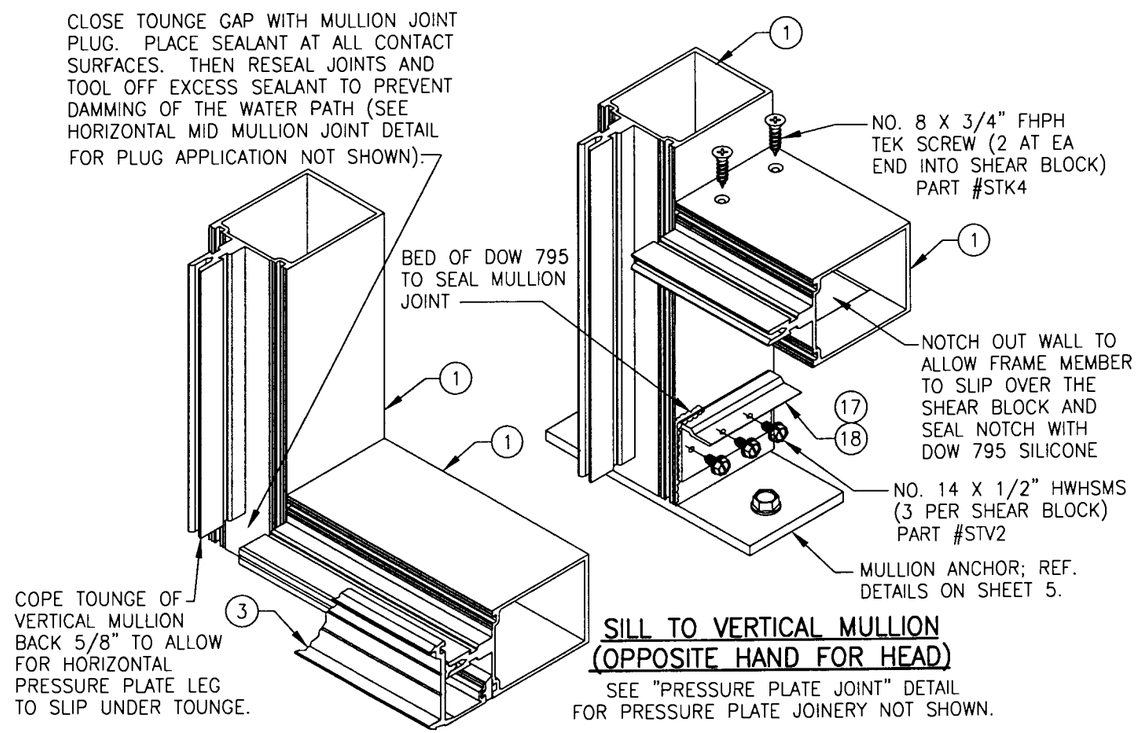

SILL TO VERTICAL MULLION (OPPOSITE HAND FOR HEAD)

SEE "PRESSURE PLATE JOINT" DETAIL FOR PRESSURE PLATE JOINERY NOT SHOWN.

Approved as complying with the Florida Buiding Code
Date June 27, 2007
NOA# 02-0308.12
Miami Dade Product Control Division
By Manuel Perez

DRAWN BY: W.W.S.	CHECKED BY: W.W.S.
PLOT: 1=2	DATE: 01/31/02

NO.	REVISION DESCRIPTION	BY	DATE

DRAWING TITLE
7" DEEP SERIES 5600 LARGE MISSILE IMPACT CURTAIN WALL SYSTEM

MANUFACTURER
EFCO CORPORATION
1000 COUNTY ROAD; P.O. BOX 609
MONETT, MO 65708-0609
800-221-4169

CONSULTANTS
W. W. SCHAEFER ENGINEERING & CONSULTING, P.A.
600 SANDTREE DRIVE; SUITE 203B
PALM BEACH GARDENS, FL 33403
PHONE: 561-775-4902 FAX: 561-775-4903

CERTIFICATION
APR 25 2007
WARREN W. SCHAEFER, P.E.
P.E. NO. 44135

DRAWING NO. 1089
REV.

SHEET NO. 4 OF 8

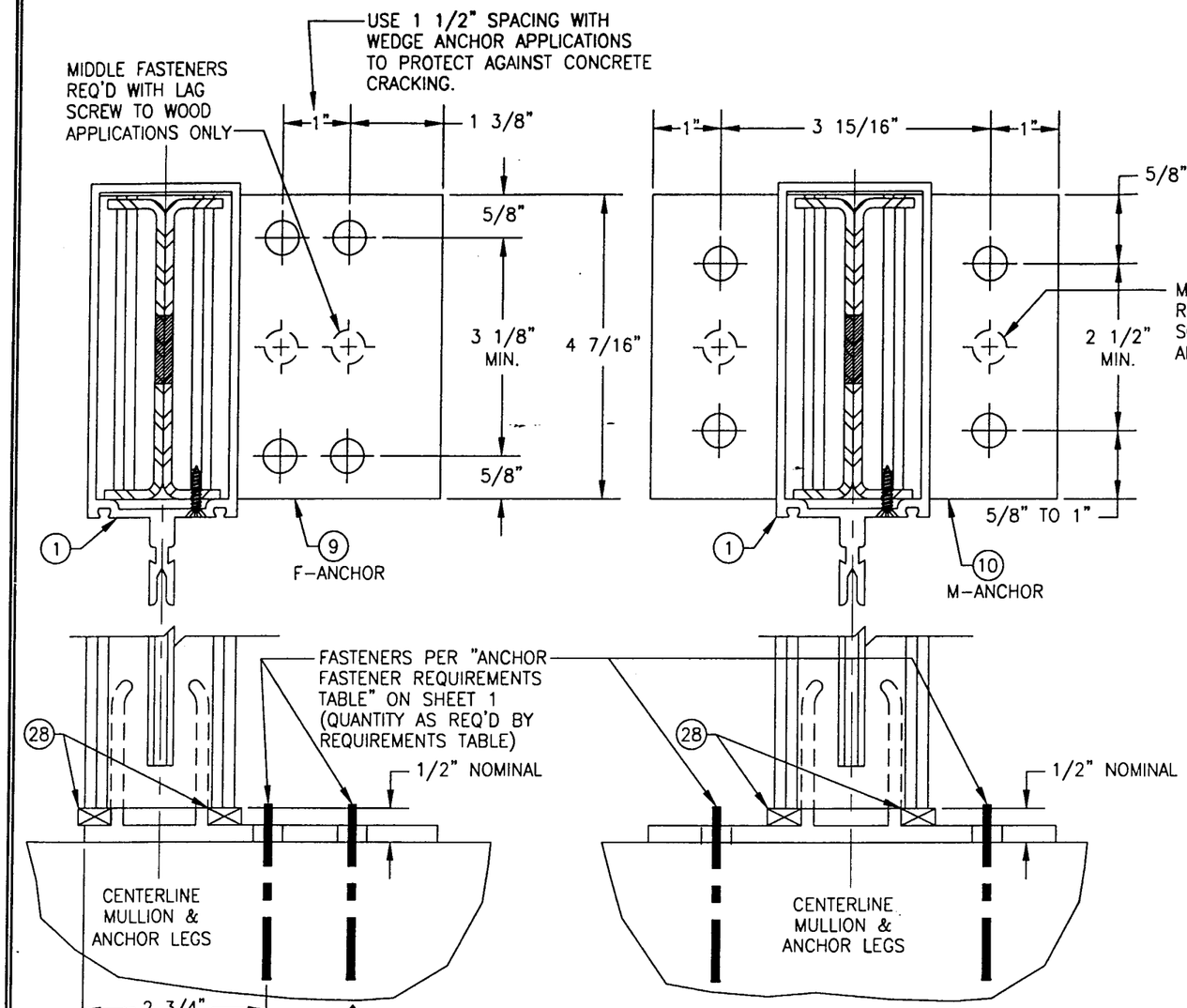

"F-ANCHOR" DETAIL

(TYP. AT SIDE JAMB MULLIONS)

NOTE: GLAZING & HORIZONTAL MEMBER NOT SHOWN FOR CLARITY.

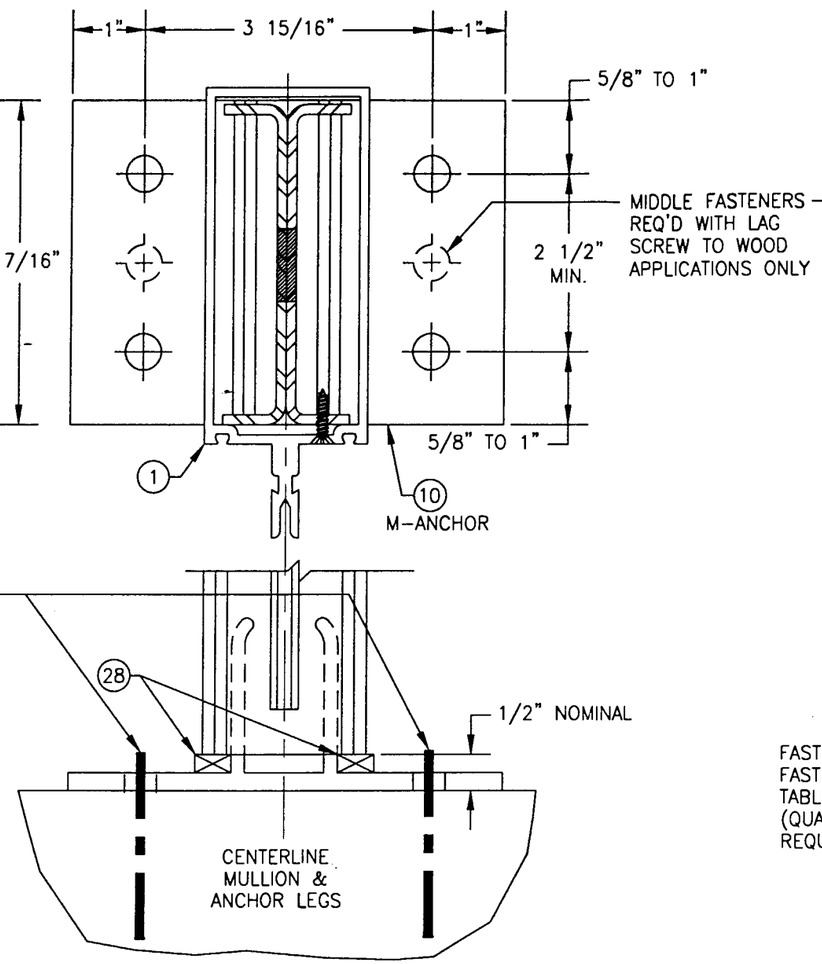

"M-ANCHOR" DETAIL

(TYP. AT INTERMEDIATE MULLIONS)

NOTE: GLAZING & HORIZONTAL MEMBERS NOT SHOWN FOR CLARITY.

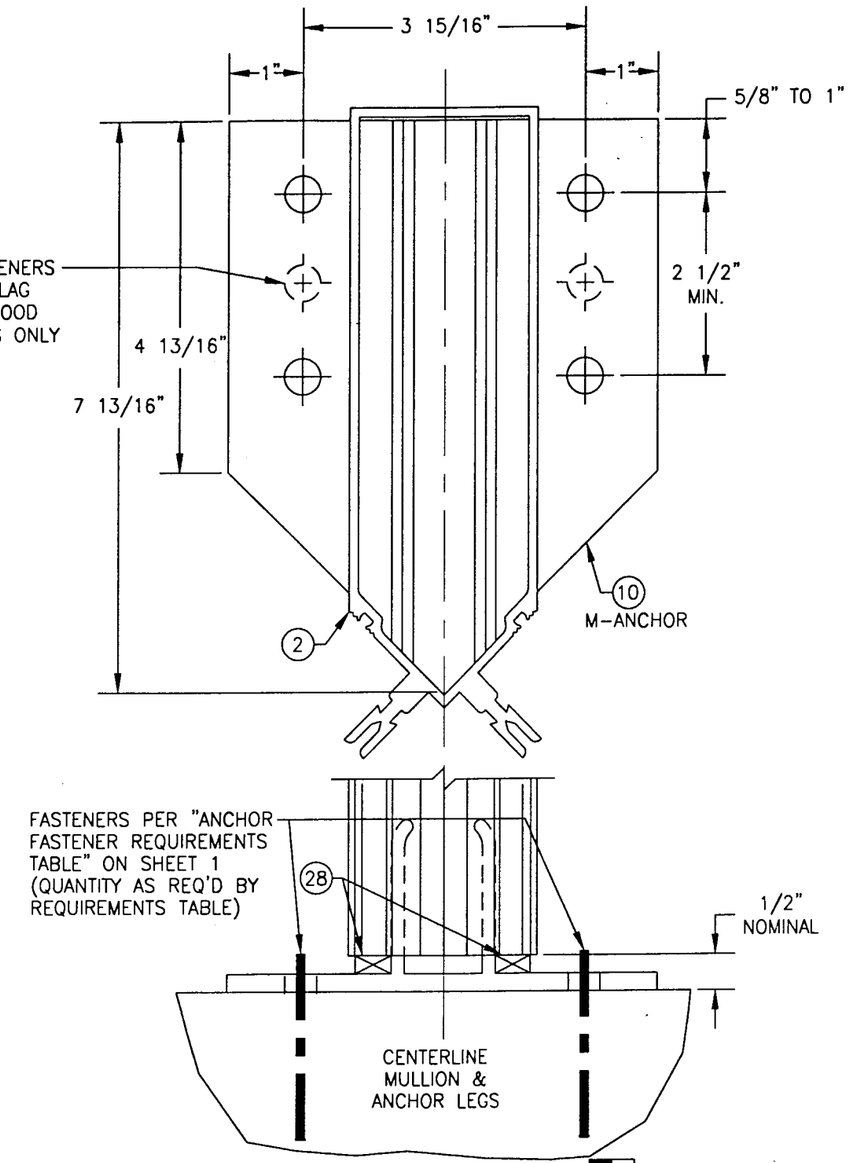

"M-ANCHOR" DETAIL

(TYP. AT CORNER MULLIONS)

NOTE: GLAZING & HORIZONTAL MEMBERS NOT SHOWN FOR CLARITY.

Approved as complying with the Florida Buiding Code
Date JUNE 27, 2002
NOA# 02-0308.12
Miami Dade Product Control Division
By Manuel Perez

DRAWN BY: W.W.S.	CHECKED BY: W.W.S.
PLOT: 1=2	DATE: 01/31/02

NO.	REVISION DESCRIPTION	BY	DATE

DRAWING TITLE
7" DEEP SERIES 5600 LARGE MISSILE IMPACT CURTAIN WALL SYSTEM

MANUFACTURER
EFCO CORPORATION
1000 COUNTY ROAD; P.O. BOX 609
MONETT, MO 65708-0609
800-221-4169

CONSULTANTS
W. W. SCHAEFER ENGINEERING & CONSULTING, P.A.
600 SANDTREE DRIVE; SUITE 203B
PALM BEACH GARDENS, FL 33403
PHONE: 561-775-4902 FAX: 561-775-4903

CERTIFICATION
APR 25 2002
WARREN W. SCHAEFER, P.E.
P.E. NO. 44135

DRAWING NO. 1089
REV.

SHEET NO. 5 OF 8

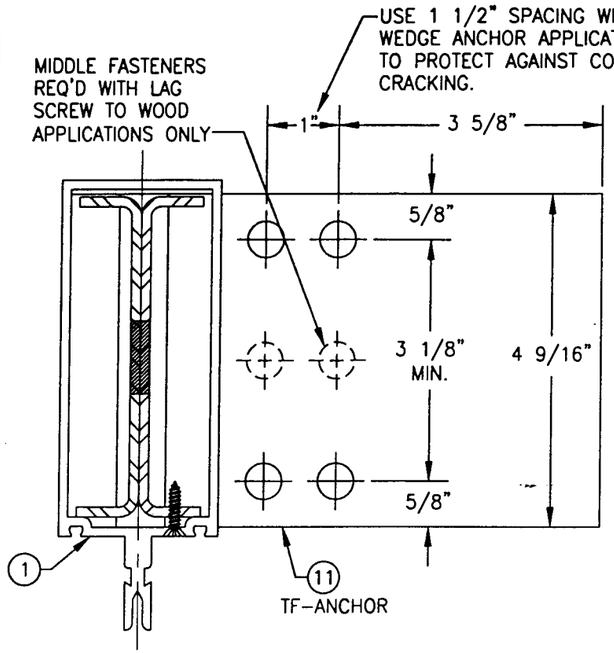

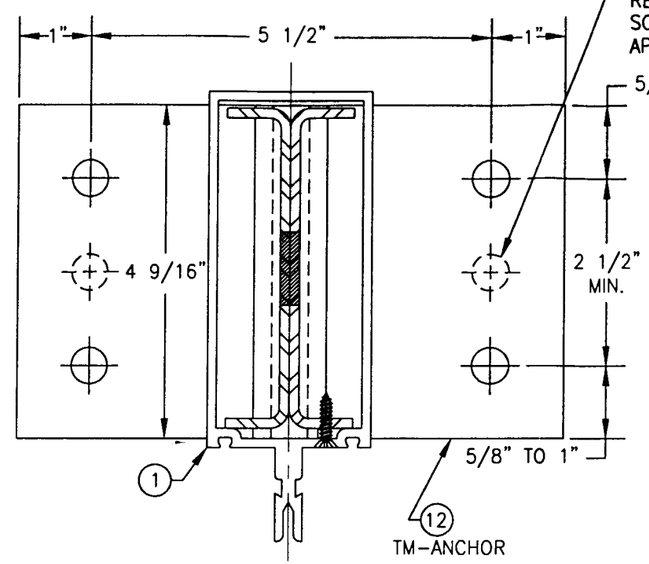

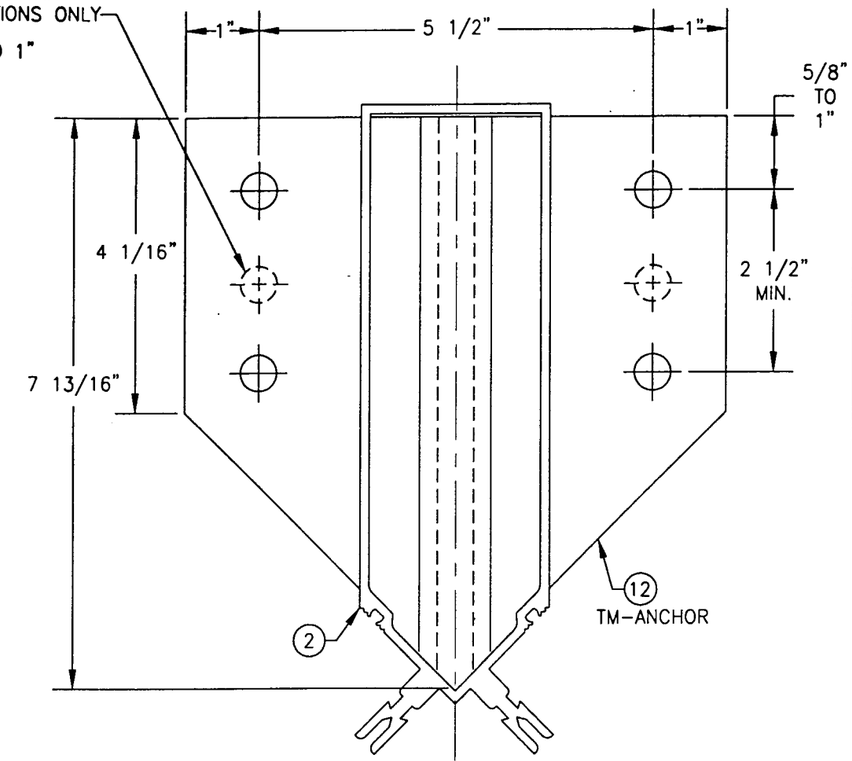

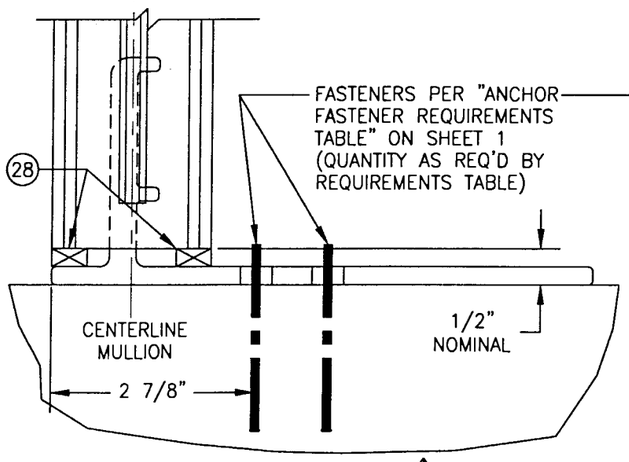

"TF-ANCHOR" DETAIL

(TYP. AT SIDE JAMB MULLIONS)

NOTE: GLAZING & HORIZONTAL MEMBER NOT SHOWN FOR CLARITY.

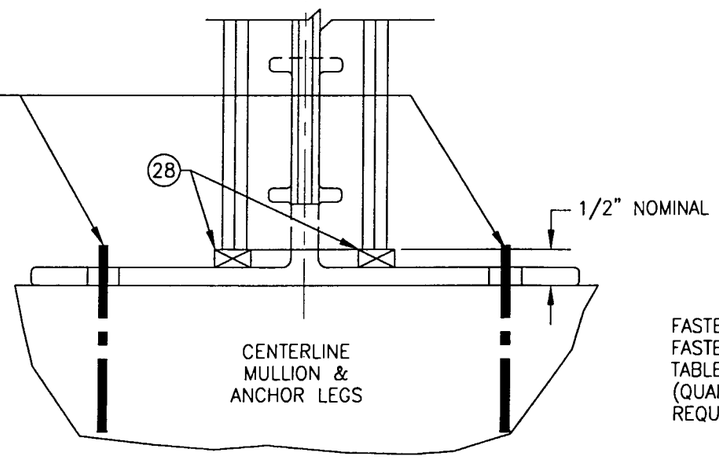

"TM-ANCHOR" DETAIL

(TYP. AT INTERMEDIATE MULLIONS)

NOTE: GLAZING & HORIZONTAL MEMBERS NOT SHOWN FOR CLARITY.

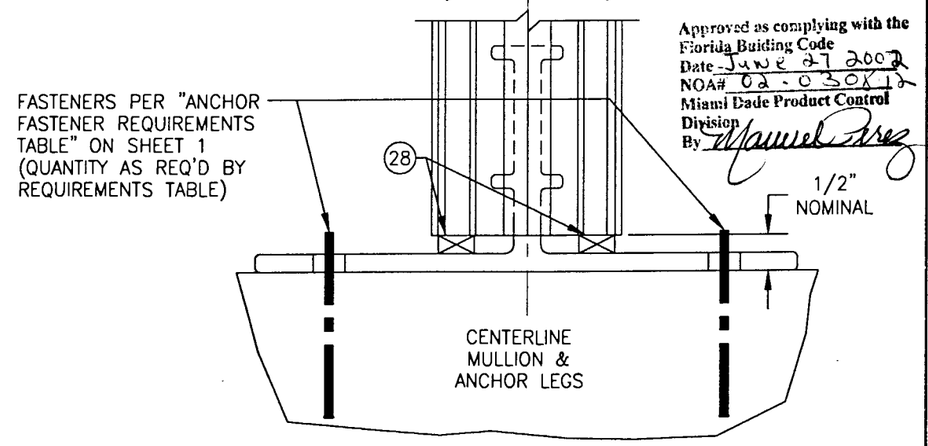

Approved as complying with the Florida Buiding Code
Date JUNE 27 2002
NOA# 02-0308.12
Miami Dade Product Control Division
By Manuel Perez

"TM-ANCHOR" DETAIL

NOTE: GLAZING & HORIZONTAL MEMBERS NOT SHOWN FOR CLARITY.

(TYP. AT CORNER MULLIONS)

DRAWN BY: W.W.S.	CHECKED BY: W.W.S.
PLOT: 1=2	DATE: 01/31/02

NO.	REVISION DESCRIPTION	BY	DATE

DRAWING TITLE: 7" DEEP SERIES 5600 LARGE MISSILE IMPACT CURTAIN WALL SYSTEM

MANUFACTURER: EFCO CORPORATION, 1000 COUNTY ROAD; P.O. BOX 609, MONETT, MO 65708-0609, 800-221-4169

CONSULTANTS: W. W. SCHAEFER ENGINEERING & CONSULTING, P.A., 600 SANDTREE DRIVE; SUITE 203B, PALM BEACH GARDENS, FL 33403, PHONE: 561-775-4902 FAX: 561-775-4903

CERTIFICATION: APR 25 2002

WARREN W. SCHAEFER, P.E. P.E. NO. 44135

DRAWING NO. 1089 REV.

SHEET NO. 6 OF 8

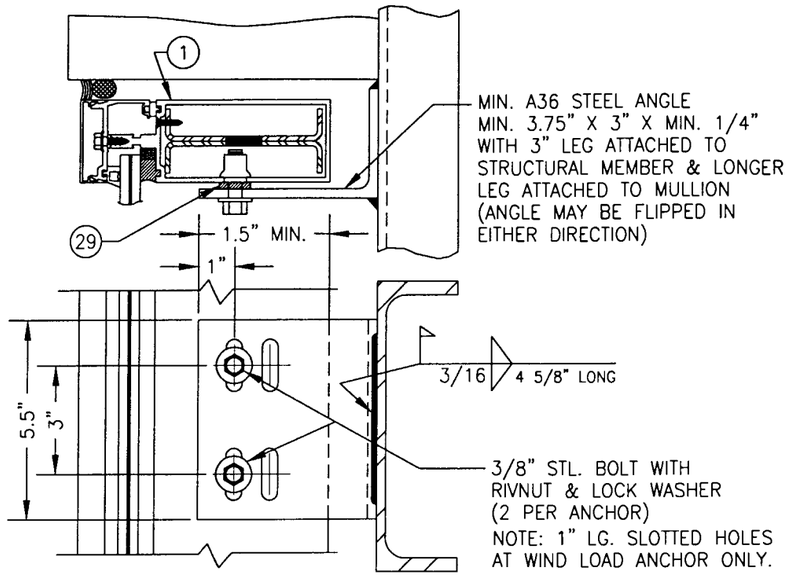

DEAD LOAD & WIND LOAD ANCHOR DETAIL
(TYP. AT JAMB MULLIONS)
(WIND LOAD ANCHOR HAS 1" LONG SLOTS FOR VERTICAL MOVEMENT)

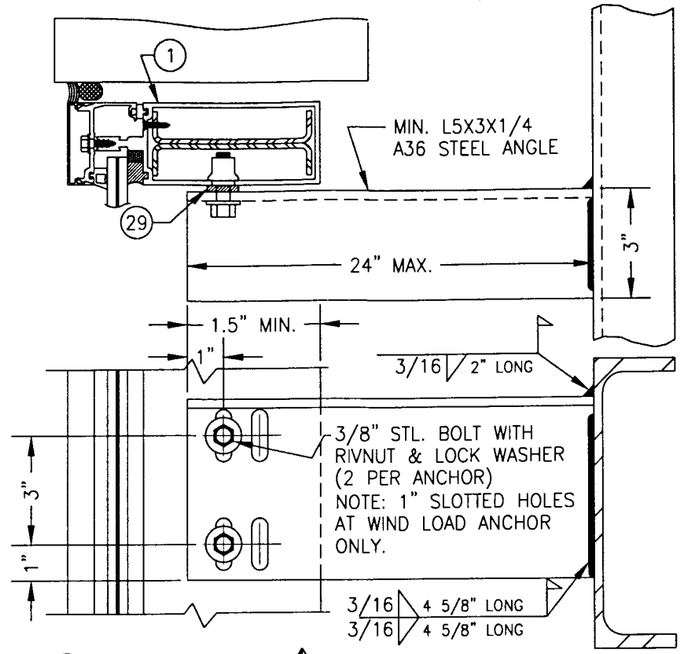

EXTENDED DEAD LOAD & WIND LOAD ANCHOR DETAIL
(TYP. AT JAMB MULLIONS) (WIND LOAD ANCHOR HAS 1" LONG SLOTS FOR VERTICAL MOVEMENT)

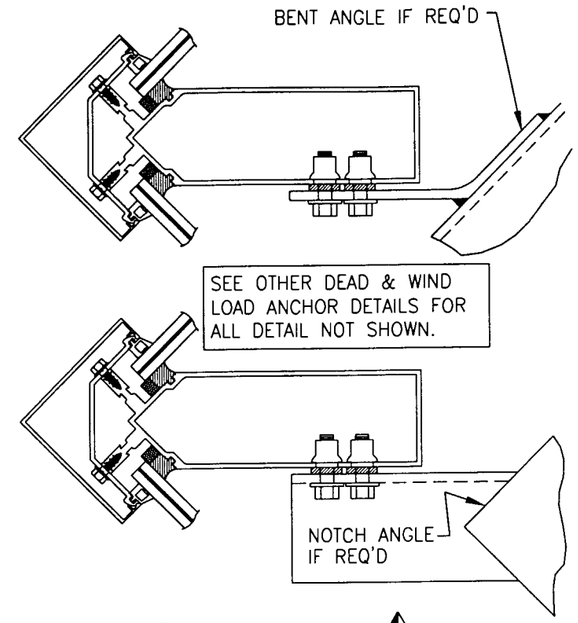

DEAD LOAD & WIND LOAD ANCHOR DETAIL
(TYP. AT CORNER MULLS)

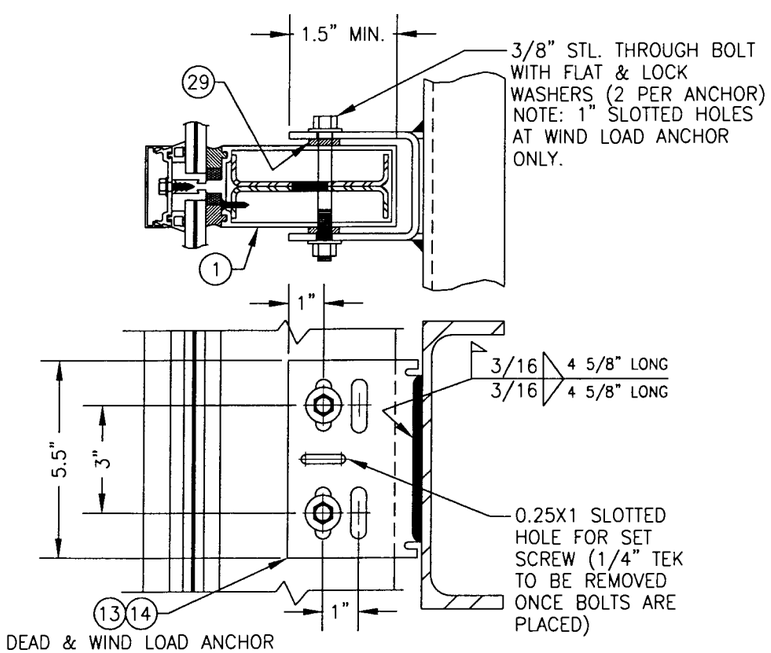

DEAD LOAD & WIND LOAD ANCHOR DETAIL
(TYP. AT INTERMEDIATE MULLIONS)
(WIND LOAD ANCHOR HAS 1" LONG SLOTS FOR VERTICAL MOVEMENT)

NOTE: DEAD LOAD & WIND LOAD ANCHOR DETAILS ARE SAME AT CORNER MULLION.

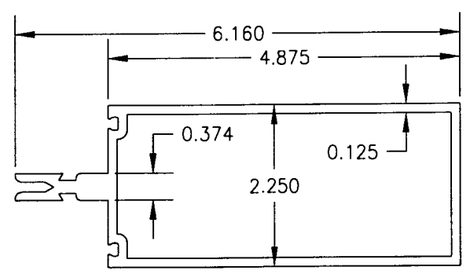

1 JAMB & MIDDLE MULLION

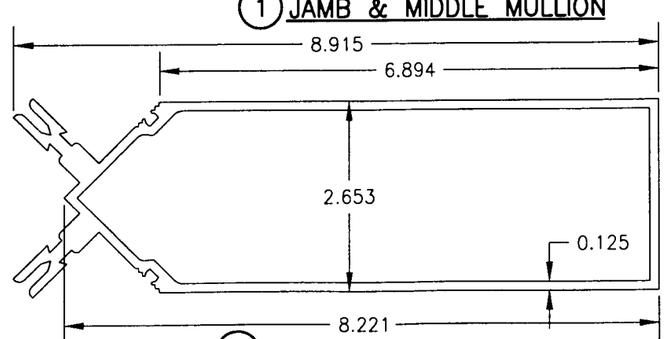

2 CORNER MULLION

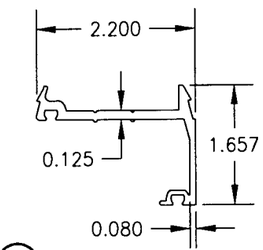

3 JAMB PRESSURE PLATE

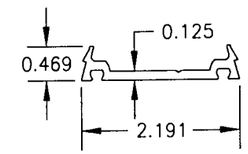

4 MID MULLION PRESSURE PLATE

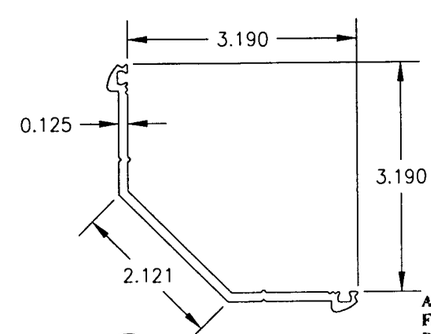

5 CORNER MULL PRESSURE PLATE

Approved as complying with the Florida Building Code
Date June 27, 2002
NOA# 02-0308.12
Miami Dade Product Control Division
By Manuel Perez

DRAWN BY: W.W.S.	CHECKED BY: W.W.S.
PLOT: 1=2	DATE: 01/31/02

NO.	REVISION DESCRIPTION	BY	DATE

DRAWING TITLE
7" DEEP SERIES 5600 LARGE MISSILE IMPACT CURTAIN WALL SYSTEM

MANUFACTURER
EFCO CORPORATION
1000 COUNTY ROAD; P.O. BOX 609
MONETT, MO 65708-0609
800-221-4169

CONSULTANTS
W. W. SCHAEFER ENGINEERING & CONSULTING, P.A.
600 SANDTREE DRIVE; SUITE 203B
PALM BEACH GARDENS, FL 33403
PHONE: 561-775-4902 FAX: 561-775-4903

CERTIFICATION
APR 25 2002
WARREN W. SCHAEFER, P.E.
P.E. NO. 44135

DRAWING NO. 1089
REV.
SHEET NO. 7 OF 8

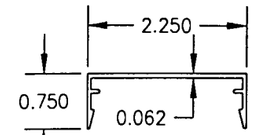

6 MULL COVER

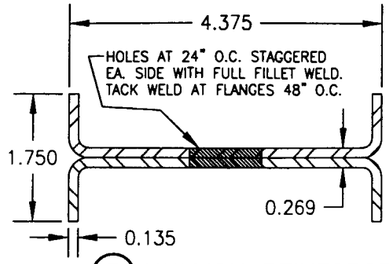

8 MULLION REINFORCEMENT

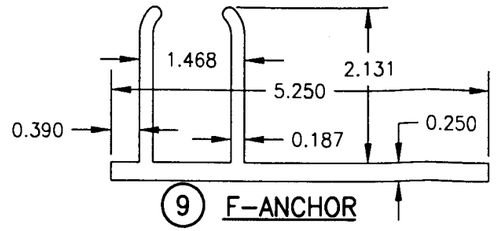

9 F-ANCHOR

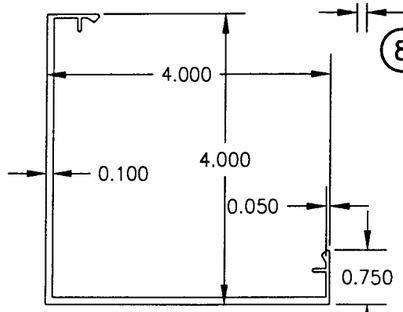

7 CORNER MULL COVER

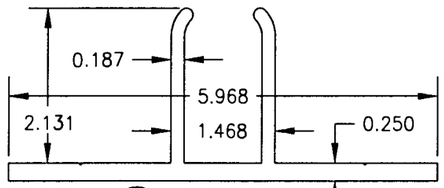

10 M-ANCHOR

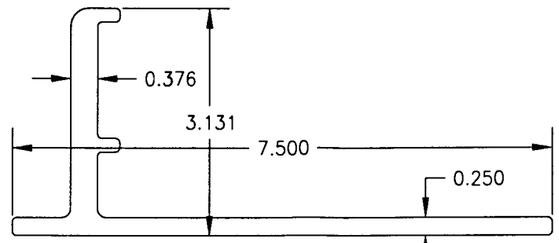

11 TF-ANCHOR

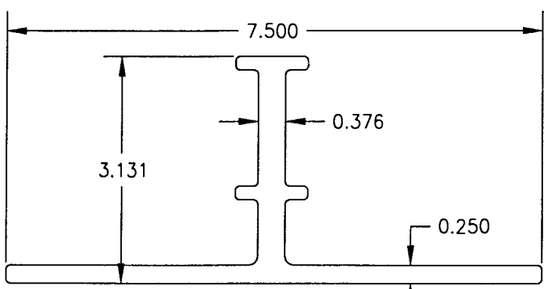

12 TM-ANCHOR

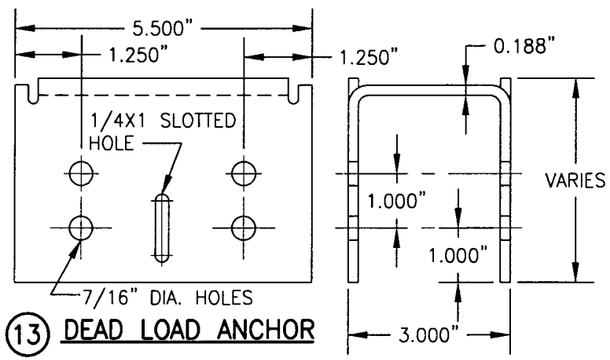

13 DEAD LOAD ANCHOR

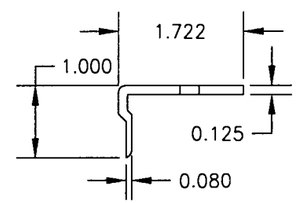

17 18 HEAD/SILL SHEAR BLOCK

LENGTH = 4.375" @ MID & JAMB MULLS & 7.187" @ CORNER MULLS (ENDS ARE MITERED 45 DEG. AT CORNER MULLIONS)

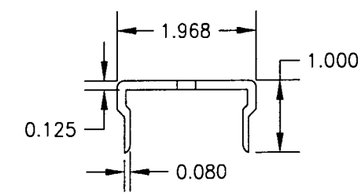

19 20 MID MULL SHEAR BLOCK

LENGTH = 4.375" @ MID & JAMB MULLS & 7.187" @ CORNER MULLS (ENDS ARE MITERED 45 DEG. AT CORNER MULLIONS)

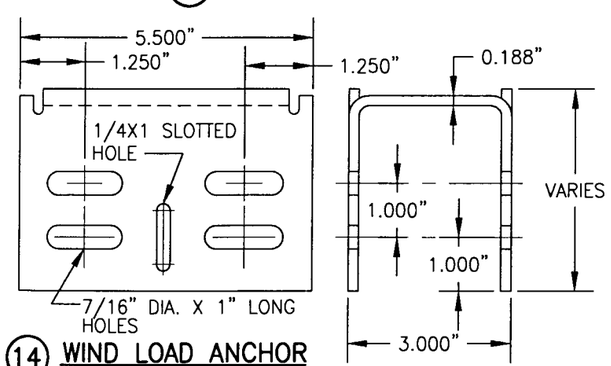

14 WIND LOAD ANCHOR

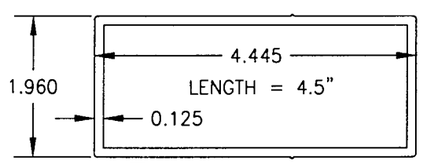

15 MULLION SPLICE

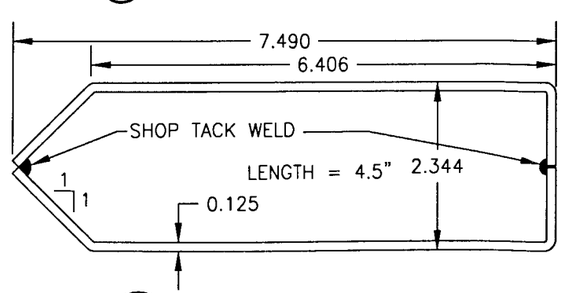

16 CORNER MULLION SPLICE

ITEM #	PART	ITEM DESCRIPTION	MANUFACTURER/NOTES
		PARTS	
1	6094	JAMB & MIDDLE MULLION	EFCO; 6063-T6 ALUMINUM
2	5090	CORNER MULLION	EFCO; 6063-T6 ALUMINUM
3	5977	JAMB PRESSURE PLATE	EFCO; 6063-T6 ALUMINUM
4	5959	MIDDLE MULLION PRESSURE PLATE	EFCO; 6063-T6 ALUMINUM
5	5904	CORNER MULLION PRESSURE PLATE	EFCO; 6063-T6 ALUMINUM
6	5882	MULLION COVER	EFCO; 6063-T6 ALUMINUM
7	5905	CORNER MULLION COVER	EFCO; 6063-T6 ALUMINUM
8	SR6094A	DOUBLE CHANNEL MULL REINF.	EFCO; A36 MIN. STEEL
9	5878	F-ANCHOR	EFCO; 6063-T6 ALUMINUM
10	4026	M-ANCHOR	EFCO; 6063-T6 ALUMINUM
11	3709	TF ANCHOR	EFCO; 6063-T6 ALUMINUM
12	3708	TM ANCHOR	EFCO; 6063-T6 ALUMINUM
13	–	DEAD LOAD ANCHOR	EFCO; A36 MIN. STEEL
14	–	WIND LOAD ANCHOR	EFCO; A36 MIN. STEEL
15	5918	MULLION SPLICE	EFCO; 6063-T6 ALUMINUM
16	KX70	CORNER MULLION SPLICE	EFCO; A36 MIN. STEEL
17	KY49/KY50 6333	HEAD/SILL SHEAR BLOCK	EFCO; 6063-T6 ALUMINUM
18	KT50/KT51 6333	HEAD/SILL SHEAR BLOCK (CORNER MULL)	EFCO; 6063-T6 ALUMINUM
19	KW03/5879	MID MULL SHEAR BLOCK	EFCO; 6063-T6 ALUMINUM
20	KW61/5879	MID MULL SHEAR BLOCK (CORNER MULL)	EFCO; 6063-T6 ALUMINUM
		SEALS, SEALANTS & SHIMS	
21	WEP7	3/16" SILICONE SPACER	EPG
22A	W163	3/8" PRESET PEROXIDE CURE EPDM	EPG
22B	W162	7/16" PRESET PEROXIDE CURE EPDM	EPG
23	WM88	5/16" X 7/16" V2100	NORTON
24	HN16	0.187" X 0.812" X 4" GLAZING BLOCK	EPG
25	WNC8	1/8" PRESET 70 DUROMETER EPDM	EPG
26	WM87	5/16" X 1/4" V2100	NORTON
27	HN91	0.187" X 1.0" X 4" GLAZING BLOCK	EPG
28	HS01	POLYSTRENE SHIM	FALMOUTH PLASTIC
29	HS01	POLYSTRENE SHIM	FALMOUTH PLASTIC
		MISCELLANEOUS FASTENERS	
30	STC0	13-16 X 5/8" HWH S.S. SMS SCREW	6" O.C.
31	SPC0	NO. 8 X 3/4 PL FH SMS SCREW	3/MULL REINFORCEMENT SECTION

Approved as complying with the Florida Buiding Code
Date June 27 2002
NOA# 02-0328.12
Miami Dade Product Control Division
By Manuel Perez

DRAWN BY: W.W.S.	CHECKED BY: W.W.S.
PLOT: 1=2	DATE: 01/31/02

NO.	REVISION DESCRIPTION	BY	DATE

DRAWING TITLE
7" DEEP SERIES 5600 LARGE MISSILE IMPACT CURTAIN WALL SYSTEM

MANUFACTURER
EFCO CORPORATION
1000 COUNTY ROAD; P.O. BOX 609
MONETT, MO 65708-0609
800-221-4169

CONSULTANTS
W. W. SCHAEFER ENGINEERING & CONSULTING, P.A.
600 SANDTREE DRIVE; SUITE 203B
PALM BEACH GARDENS, FL 33403
PHONE: 561-775-4902 FAX: 561-775-4903

CERTIFICATION
APR 25 2002
WARREN W. SCHAEFER, P.E.
P.E. NO. 44135

DRAWING NO. 1089
REV.
SHEET NO. 8 OF 8