MIAMI-DADE

BUILDING CODE COMPLIANCE OFFICE (BCCO)
PRODUCT CONTROL DIVISION

MIAMI-DADE COUNTY, FLORIDA
METRO-DADE FLAGLER BUILDING
140 WEST FLAGLER STREET, SUITE 1603
MIAMI, FLORIDA 33130-1563
(305) 375-2901 FAX (305) 375-2908

NOTICE OF ACCEPTANCE (NOA)

Paramount Skylights, Inc.
1313 N.W. 65th Place, Bay #5
Ft. Lauderdale, Fl 33309

SCOPE:
This NOA is being issued under the applicable rules and regulations governing the use of construction materials. The documentation submitted has been reviewed by Miami-Dade County Product Control Division and accepted by the Board of Rules and Appeals (BORA) to be used in Miami Dade County and other areas where allowed by the Authority Having Jurisdiction (AHJ).

This NOA shall not be valid after the expiration date stated below. The Miami-Dade County Product Control Division (In Miami Dade County) and/or the AHJ (in areas other than Miami Dade County) reserve the right to have this product or material tested for quality assurance purposes. If this product or material fails to perform in the accepted manner, the manufacturer will incur the expense of such testing and the AHJ may immediately revoke, modify, or suspend the use of such product or material within their jurisdiction. BORA reserves the right to revoke this acceptance, if it is determined by Miami-Dade County Product Control Division that this product or material fails to meet the requirements of the applicable building code.

This product is approved as described herein, and has been designed to comply with the High Velocity Hurricane Zone of the Florida Building Code.

DESCRIPTION: 3/8" Polycarbonate Glazing and Aluminum Extrusions Skylight System

APPROVAL DOCUMENT: Drawing No., titled "Prototype <Ridge Skylight> for Metro Dade Approval", sheets 1 of 1 and 1 through 3, prepared, signed and sealed by Mark Duckett, P.E., dated 2/8/99, bearing the Miami-Dade County Product Control Approval stamp with the Notice of Acceptance number and approval date by the Miami-Dade County Product Control Division.

MISSILE IMPACT RATING: Large and Small Missile Impact

LABELING: Each unit shall bear a permanent label with the manufacturer's name or logo, city, state and following statement: "Miami-Dade County Product Control Approved", unless otherwise noted herein.

RENEWAL of this NOA shall be considered after a renewal application has been filed and there has been no change in the applicable building code negatively affecting the performance of this product.

TERMINATION of this NOA will occur after the expiration date or if there has been a revision or change in the materials, use, and/or manufacture of the product or process. Misuse of this NOA as an endorsement of any product, for sales, advertising or any other purposes shall automatically terminate this NOA. Failure to comply with any section of this NOA shall be cause for termination and removal of NOA.

ADVERTISEMENT: The NOA number preceded by the words Miami-Dade County, Florida, and followed by the expiration date may be displayed in advertising literature. If any portion of the NOA is displayed, then it shall be done in its entirety.

INSPECTION: A copy of this entire NOA shall be provided to the user by the manufacturer or its distributors and shall be available for inspection at the job site at the request of the Building Official.

This NOA **revises NOA # 97-1001.02** and, consists of this page 1 as well as approval document mentioned above. The submitted documentation was reviewed by **Raul Rodriguez.**

PRODUCT CONTROL ACCEPTED

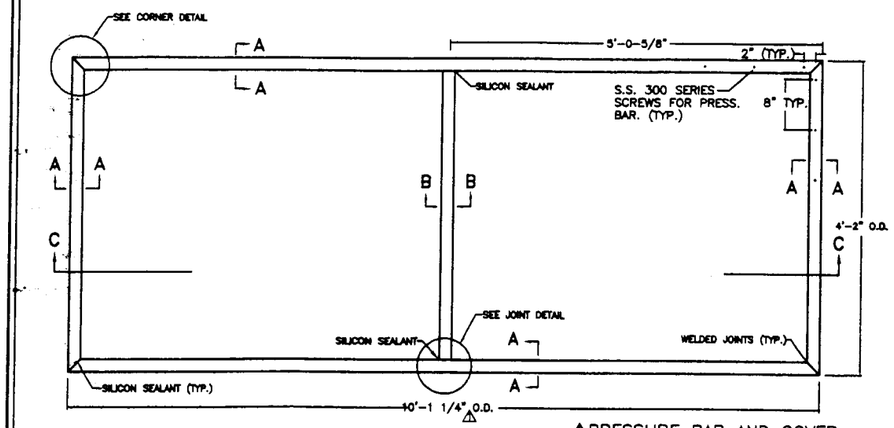

PLAN VIEW
SCALE: 1/2" = 1"

△PRESSURE BAR AND COVER SEALED WITH SILICONE

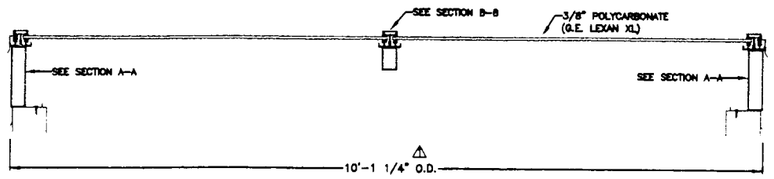

SECTION C-C
SCALE: 1/2" = 1"

GENERAL NOTES

1. ALL ALUMINUM TO BE 6063-T5 ALLOY.
2. FASTENERS TO BE STAINLESS STEEL.
3. GASKETS TO BE NEOPRENE.
4. GLAZING TO BE 3/8" POLYCARBONATE (G.E. LEXAN XL). (COLOR TO BE SELECTED).
5. FINISH TO BE E.S.P. (COLOR TO BE SELECTED).
6. CURBS TO BE PROPERLY PREPARED BY OTHERS TO WITHIN ±1/4" TOLERANCE.
7. CURBS-SILLS TO BE BEDDED IN SEALANT.
8. ALL INSIDE WELDS TO BE STITCH WELD (MIG OR HELI-ARC) AND SHALL BE SPACED NO MORE THAN 12" O.C.
9. ALL INSTALLATION AND MANUFACTURING TO BE IN COMPLIANCE WITH METRO DADE MINIMUM TECHNICAL STANDARDS.
10. ALL STITCH WELD TO BE 2" IN LENGTH AND 3/8" IN THROAT.
11. ALL SILICON TO BE G.E. 1000.
12. △A- MAXIMUM DESIGN PRESSURES ARE +95.9 PSF/-102.3 PSF.
    △B- ALL JOINTS ON PRESSURE BAR AND BEAUTY CAP TO BE SILICONED.
    △C- BITUMINOUS PAINT/ZINC CHROMATE OR AN EQUAL SEPERATION MATERIAL IS REQUIRED WHEN ALUMINUM COMES IN CONTACT WITH STEEL OR WOOD OR OTHER DISSIMILAR MATERIALS.

△D- ALL 18-8 SCREWS TO BE STAINLESS STEEL #12x1-1/2" HEX HEAD S.M.S. WITH RUBBER AND METAL WASHER.

△E- DESIGN OF ALUMINUM SKYLIGHT IS IN ACCORDANCE WITH THE SOUTH FLORIDA BUILDING CODE, 1994 EDITION FOR MIAMI-DADE COUNTY.

△F- THE ADEQUACY OF THE EXISTING SUPPORTING STUCTURE SHALL BE VERIFIED TO SAFELY SUPPORT THE SKYLIGHT SYSTEM.

△G- ALL WELDING SHALL BE PERFORMED BY A CERTIFIED WELDER.

△H- THIS APPROVAL IS LIMITED TO THE FULLY ASSEMBLED 3/8" POLYCARBONATE GLAZING (G.E. LEXAN) SYSTEM AND ITS ATTACHMENT TO THE STRUCTURAL MEMBERS (TUBES) AND TO THE CURB FLASHING. THE STRUCTURAL ADEQUACY OF THE STRUCTURAL MEMBERS (TUBES), THE CURB FLASHING AND ITS ANCHORAGE TO THE CURB, AND THE CURB ARE NOT PART OF THIS APPROVAL AND THEY SHALL BE REVIEWED BY THE STUCTURAL PLANS EXAMINER OF THE CORRESPONDING BUILDING DEPARTMENT.

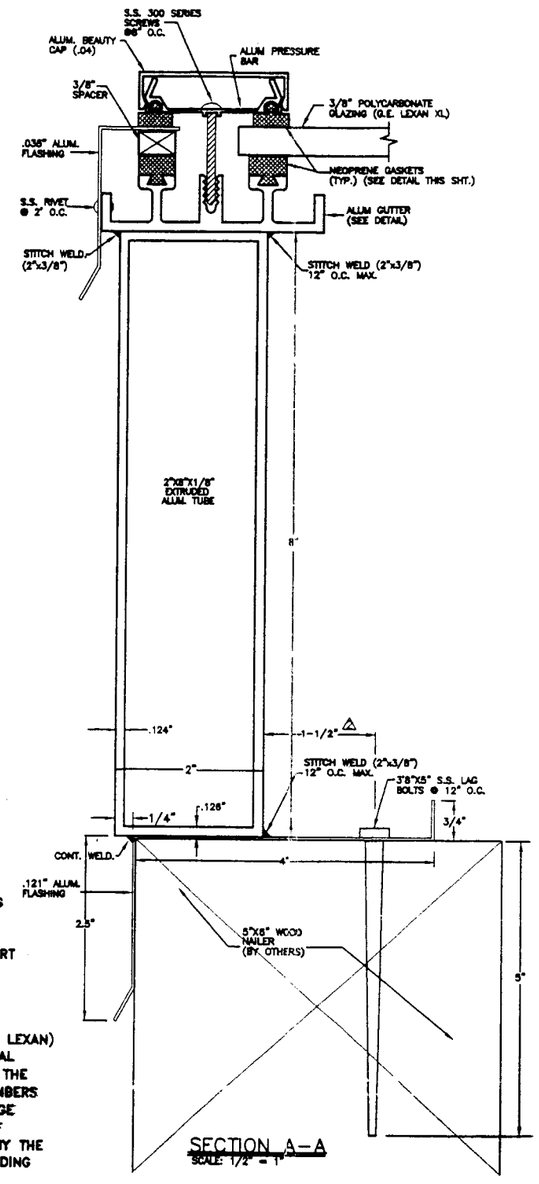

SECTION A-A
SCALE: 1/2" = 1"

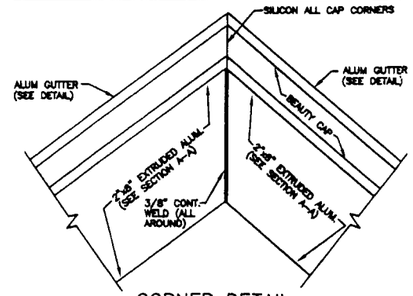

CORNER DETAIL
N.T.S.

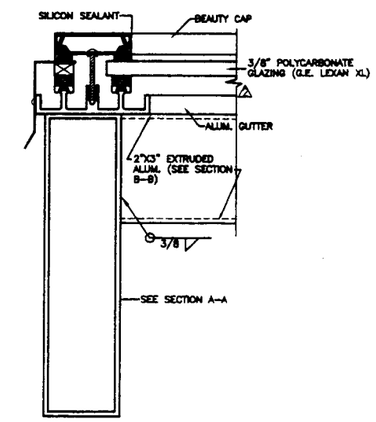

JOINT DETAIL
(SIDE VIEW)
N.T.S.

APPROVED AS COMPLYING WITH THE SOUTH FLORIDA BUILDING CODE
DATE APRIL 01 1999
BY [signature]
PRODUCT CONTROL DIVISION
BUILDING CODE COMPLIANCE OFFICE
ACCEPTANCE NO. 97-1001-02

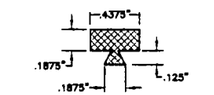

GASKET DETAIL
SCALE: 1/2" = 1"
NOTE: ALL GASKETS TO BE NEOPRENE.

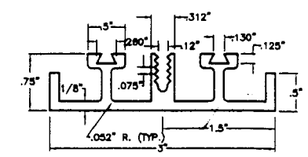

GUTTER DETAIL
SCALE: 1/2" = 1"

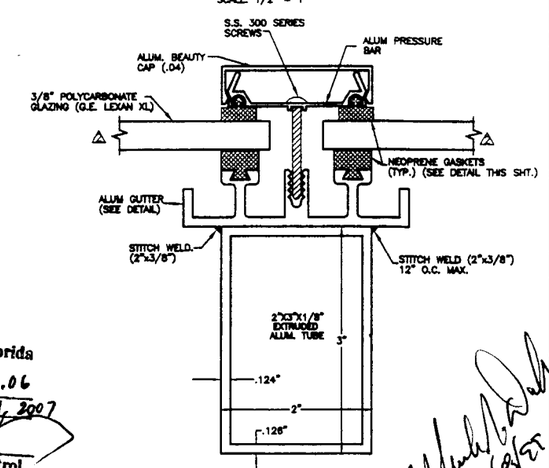

SECTION B-B
SCALE: 1/2" = 1"

PRODUCT REVISED
as complying with the Florida Buiding Code
Acceptance No. 02-0311.06
Expiration Date April 1, 2007
By [signature]
Miami-Dade Product Control Division

PARAMOUNT SKYLIGHTS, INC.
1313 N.W. 65 PL., BAY 4
FT. LAUDERDALE, FL. 33309
(954) 973-0906

ENGINEER: DUCKETT ENGINEERING GROUP, INC.

PROJECT: PROTOTYPE FOR METRO DADE APPROVAL

REVISIONS	DATE	BY	CKD.
△ REV. PER DUCKETT ENGINEERING GROUP	1/19/99	MM	MD
△ REV. PER LAB	4/6/98	LM	MD
REV. PER METRO DADE	3/15/96	MM	JN
REV. PER METRO DADE	2/22/96	MM	JN

SCALE: AS SHOWN
DATE: 12/20/95
DRAWN BY: M.M.
CH'K. BY: Y.A./M.D.
PROJ. NO.: PAR-110

SHT. NO. 1 OF 1

APPROVED AS COMPLYING WITH THE SOUTH FLORIDA BUILDING CODE
DATE APRIL 01 1999
BY Anthony A. Maker
PRODUCT CONTROL DIVISION
BUILDING CODE COMPLIANCE OFFICE
ACCEPTANCE NO. 97-1001.02

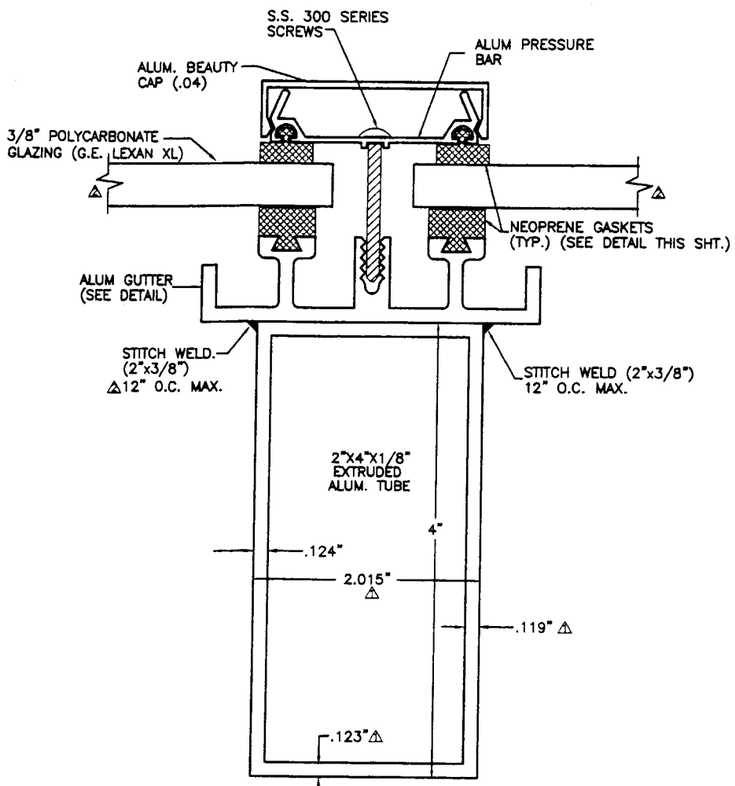

SECTION B-B
(2"X4"X1/8")
SCALE: 3/4" = 1"

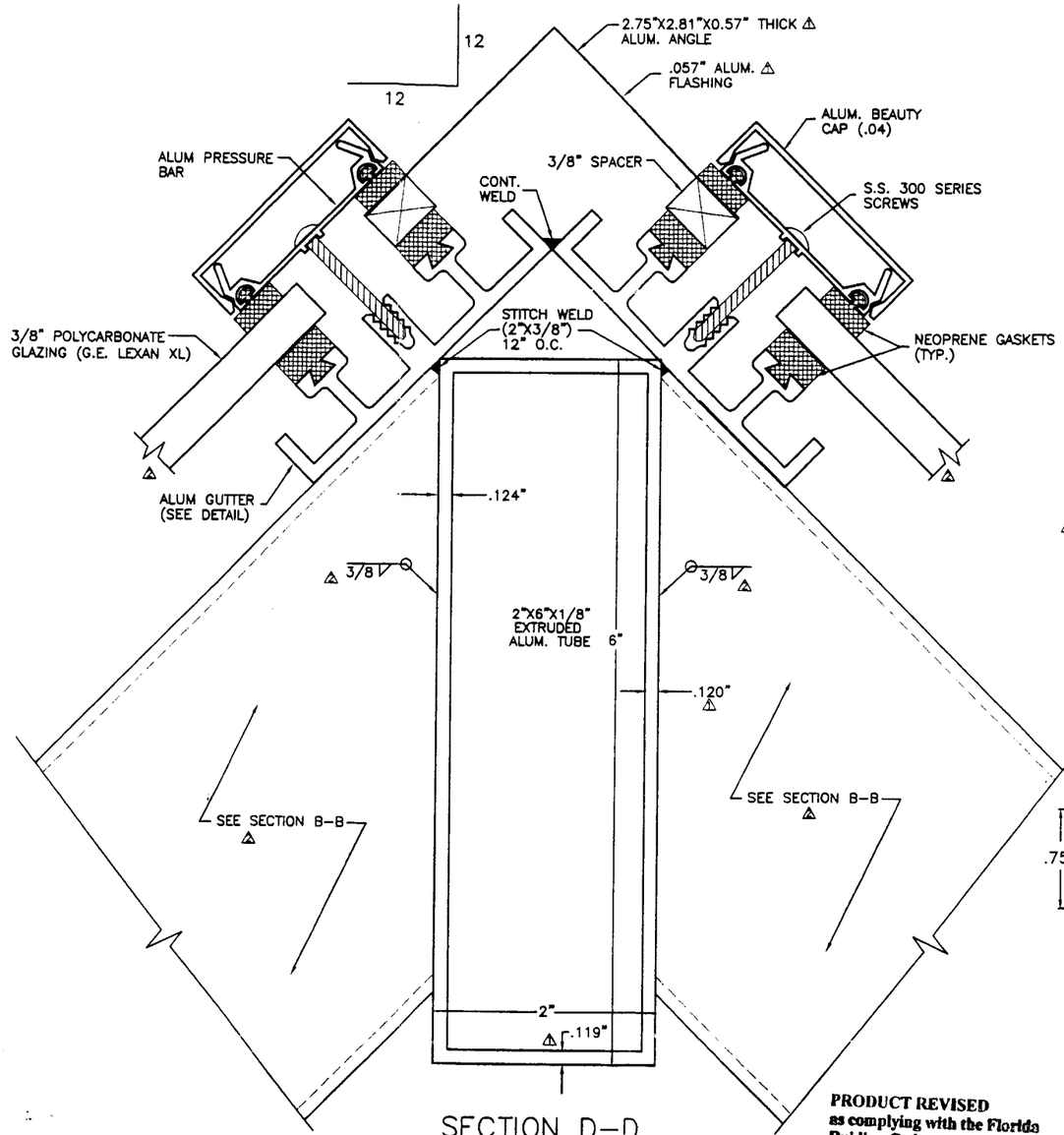

SECTION D-D
(2"X6"X1/8")
SCALE: 3/4" = 1"

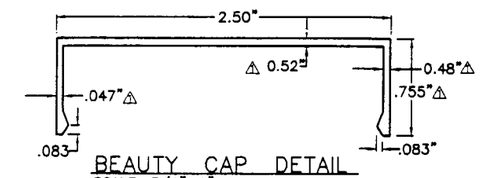

BEAUTY CAP DETAIL
SCALE: 3/4"=1"

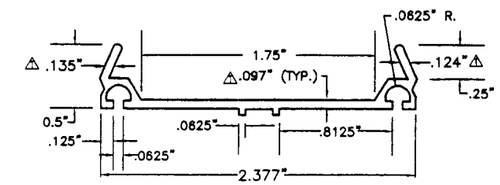

PRESSURE BAR DETAIL
SCALE: 3/4"=1"

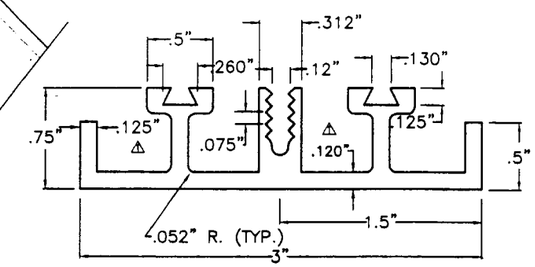

ALUMINUM GUTTER DETAIL
SCALE: 3/4"=1"

PRODUCT REVISED
as complying with the Florida Building Code
Acceptance No. 02-0311.06
Expiration Date April 1, 2007
By
Miami Dade Product Control Division

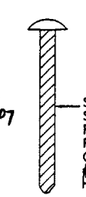

S.S. 300 SERIES SCREW FOR FASTENING PRESSURE BAR TO GUTTER
#12X1/2" HEXWASHER HEAD W/SEALER WASHERS

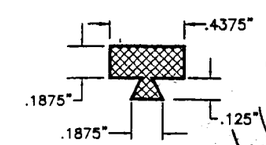

GASKET DETAIL
SCALE: 3/4" = 1"
NOTE: ALL GASKETS TO BE NEOPRENE.

PARAMOUNT SKYLIGHTS, INC.
1313 N.W. 65 PL., BAY 4
FT. LAUDERDALE, FL. 33309
(954) 973-0906

ENGINEER: DUCKETT ENGINEERING GROUP, INC.

PROJECT: PROTOTYPE RIDGE SKYLIGHT
PRODUCT APPROVAL
METRO DADE

	DATE	BY	CKD.
REV. PER ENGINEER	1/20/99	MM	MD
REV. PER LAB	4/8/98	MM	MD

SCALE: AS SHOWN
DATE: 1/15/97
DRAWN BY: M.M.
CH'K. BY: Y.A./M.D.
PROJ. NO.: 97-317

SHT. NO. 2 OF 3

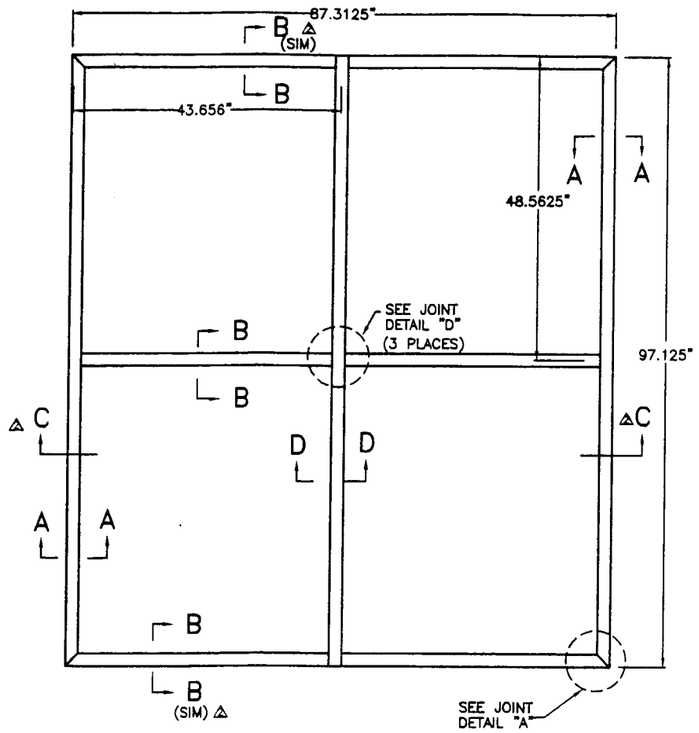

PLAN VIEW
SCALE: 1/2" = 1'

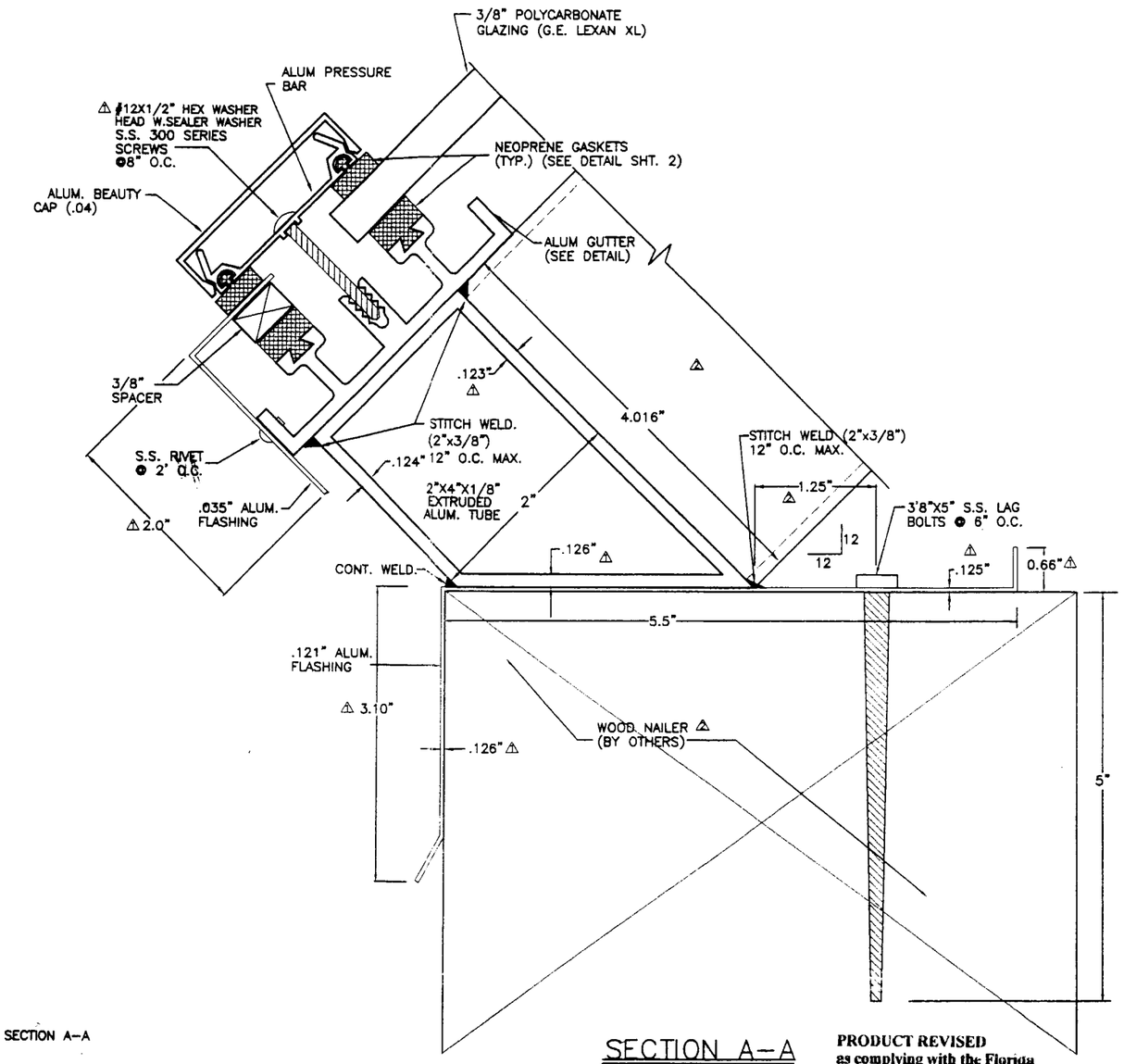

SECTION A–A
(2"X4"X1/8")
SCALE: 3/4" = 1"

APPROVED AS COMPLYING WITH THE SOUTH FLORIDA BUILDING CODE
DATE April 01 19 99
BY [signature]
PRODUCT CONTROL DIVISION
BUILDING CODE COMPLIANCE OFFICE
ACCEPTANCE NO. 97-1001.02

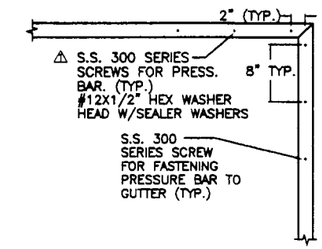

SCREW PATTERN DETAIL
NOTE: USE SAME PATTERN FOR ALL MODEL SKYLIGHTS
N.T.S.

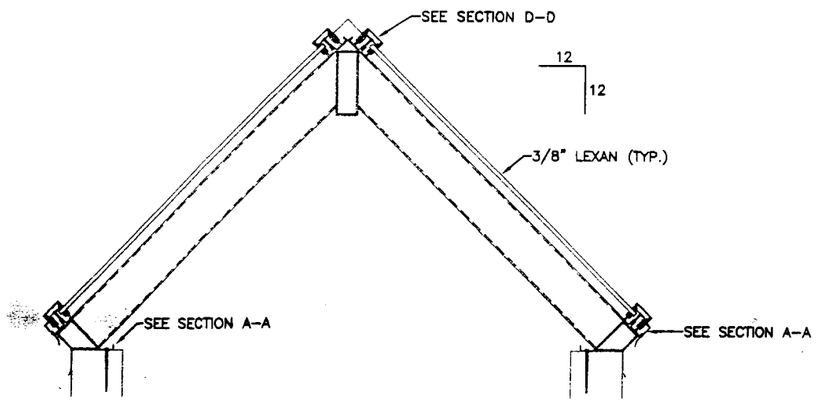

SECTION C–C
SCALE: N.T.S.

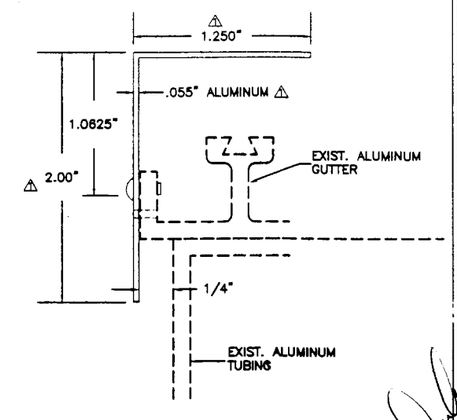

GUTTER FLASHING
SCALE: 3/4"=1"

PRODUCT REVISED
as complying with the Florida Buiding Code
Acceptance No. 02-0711.06
Expiration Date April 1, 2007
By [signature]
Miami Dade Product Control Division

2/8/99

PARAMOUNT SKYLIGHTS, INC.
1313 N.W. 65 PL., BAY 4
FT. LAUDERDALE, FL. 33309
(954) 973-0906

ENGINEER: DUCKETT ENGINEERING GROUP, INC.

PROJECT: PROTOTYPE RIDGE SKYLIGHT
PRODUCT APPROVAL
METRO DADE

	DATE	BY	CKD.
REV. PER ENGINEER	1/20/99	MM	MD
REV. PER LAB	4/8/98	MM	MD

SCALE: AS SHOWN
DATE: 1/15/97
DRAWN BY: M.M.
CH'K. BY: Y.A./M.D.
PROJ. NO.: 97-317

SHT. NO. 1 OF 3

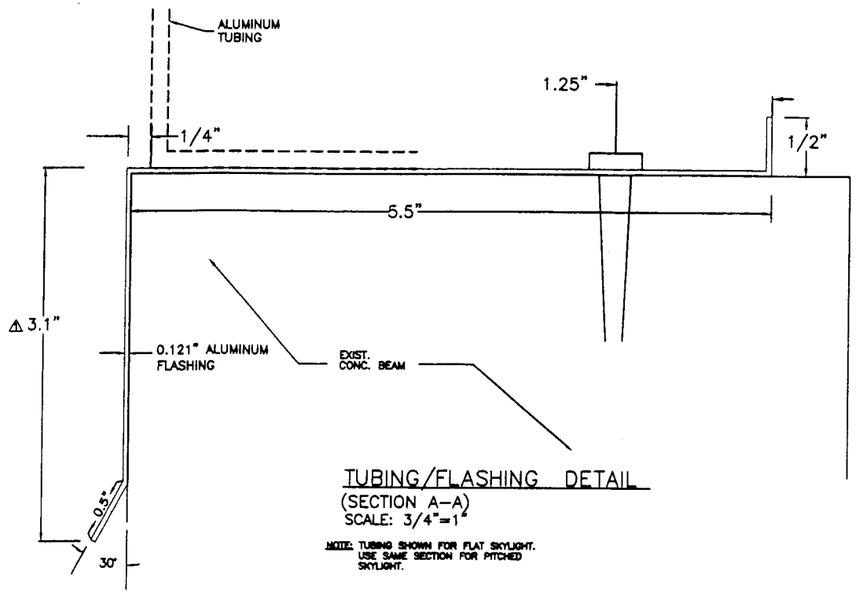

TUBING/FLASHING DETAIL
(SECTION A–A)
SCALE: 3/4"=1'

NOTE: TUBING SHOWN FOR FLAT SKYLIGHT. USE SAME SECTION FOR PITCHED SKYLIGHT.

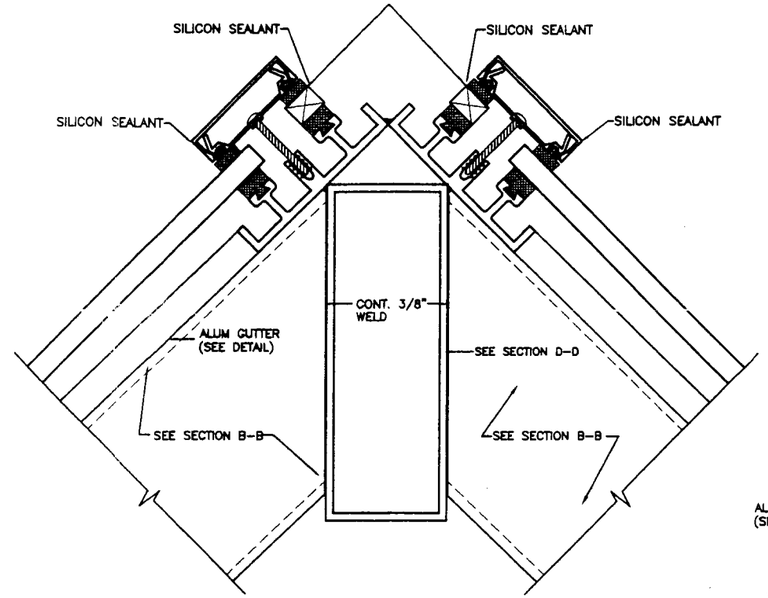

JOINT DETAIL "D"△
N.T.S.

APPROVED AS COMPLYING WITH THE SOUTH FLORIDA BUILDING CODE
DATE APRIL 01 19 99
BY Helmut A. Maier
PRODUCT CONTROL DIVISION
BUILDING CODE COMPLIANCE OFFICE
ACCEPTANCE NO. 99-1001.02

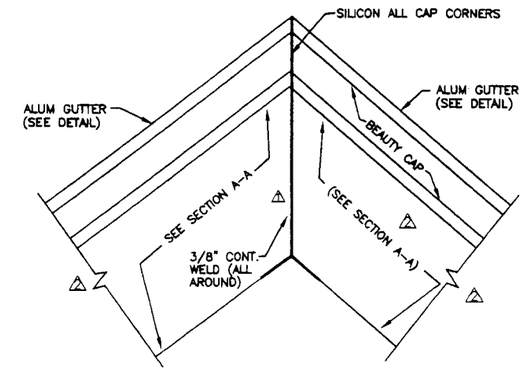

JOINT DETAIL "A"
N.T.S.

GENERAL NOTES

1. ALL ALUMINUM TO BE 6063–T5 ALLOY.
2. FASTENERS TO BE STAINLESS STEEL.
3. GASKETS TO BE NEOPRENE.
4. GLAZING TO BE 3/8" POLYCARBONATE (G.E. LEXAN XL).
5. FINISH TO BE E.S.P. (COLOR TO BE SELECTED).
6. CURBS TO BE PROPERLY PREPARED BY OTHERS TO WITHIN ±1/4" TOLERANCE.
7. CURBS–SILLS TO BE BEDDED IN SEALANT.
8. ALL INSIDE WELDS TO BE STITCH WELD (MIG OR HELI–ARC) AND SHALL BE SPACED NO MORE THAN 12" O.C.
9. ALL INSTALLATION AND MANUFACTURING TO BE IN COMPLIANCE WITH METRO DADE MINIMUM TECHNICAL STANDARDS.
10. ALL STITCH WELD TO BE 2" IN LENGTH AND 3/8" IN THROAT.
11. ALL SILICON TO BE G.E. 1000.
12. ALL JOINTS ON PRESSURE BAR AND BEAUTY CAP TO BE SILICONED.
13. INSTALLATION BY PARAMOUNT SKYLIGHTS.
14. △A– MAXIMUM DESIGN PRESSURES ARE +95.9 PSF/–102.3 PSF.
    △B– ALL JOINTS ON PRESSURE BAR AND BEAUTY CAP TO BE SILICONED.

△C– BITUMINOUS PAINT/ZINC CHROMATE OR AN EQUAL SEPERATION MATERIAL IS REQUIRED WHEN ALUMINUM COMES IN CONTACT WITH STEEL OR WOOD OR OTHER DISSIMILAR MATERIALS.

△D– ALL 18–8 SCREWS TO BE STAINLESS STEEL #12x1–1/2" HEX HEAD S.M.S. WITH RUBBER AND METAL WASHER.

△E– DESIGN OF ALUMINUM SKYLIGHT IS IN ACCORDANCE WITH THE SOUTH FLORIDA BUILDING CODE, 1994 EDITION FOR MIAMI–DADE COUNTY.

△F– THE ADEQUACY OF THE EXISTING SUPPORTING STUCTURE SHALL BE VERIFIED TO SAFELY SUPPORT THE SKYLIGHT SYSTEM.

△G– ALL WELDING SHALL BE PERFORMED BY A CERTIFIED WELDER.

△H– THIS APPROVAL IS LIMITED TO THE FULLY ASSEMBLED 3/8" POLYCARBONATE GLAZING (G.E. LEXAN) SYSTEM AND ITS ATTACHMENT TO THE STRUCTURAL MEMBERS (TUBES) AND TO THE CURB FLASHING. THE STRUCTURAL ADEQUACY OF THE STRUCTURAL MEMBERS (TUBES), THE CURB FLASHING AND ITS ANCHORAGE TO THE CURB, AND THE CURB ARE NOT PART OF THIS APPROVAL AND THEY SHALL BE REVIEWED BY THE STUCTURAL PLANS EXAMINER OF THE CORRESPONDING BUILDING DEPARTMENT.

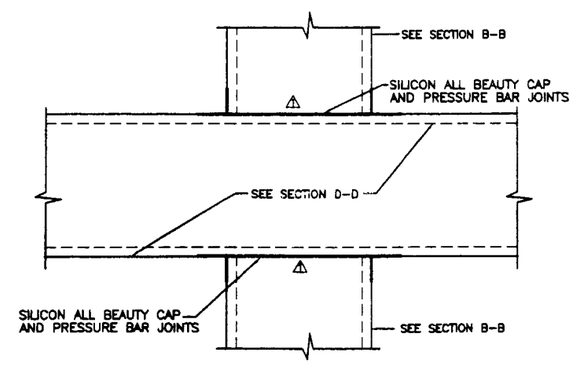

JOINT DETAIL "D"△
(PLAN VIEW)

PRODUCT REVISED
as complying with the Florida Buiding Code
Acceptance No 02-0311.06
Expiration Date April 1, 2007
By
Miami Dade Product Control Division

PARAMOUNT SKYLIGHTS, INC.
1313 N.W. 65 PL., BAY 4
FT. LAUDERDALE, FL. 33309
(954) 973–0906

ENGINEER: DUCKETT ENGINEERING GROUP, INC.
△

PROJECT: PROTOTYPE RIDGE SKYLIGHT
PRODUCT APPROVAL
METRO DADE

	DATE	BY	CKD.
△ REV. PER ENGINEER	1/20/99	MM	MD
△ REV. PER LAB	4/8/98	MM	MD

SCALE: AS SHOWN
DATE: 1/15/97
DRAWN BY: M.M.
CH'K. BY: Y.A./M.D.
PROJ. NO.: 97–317

SHT. NO. 3 OF 3