MIAMI-DADE

BUILDING CODE COMPLIANCE OFFICE (BCCO)
PRODUCT CONTROL DIVISION

MIAMI-DADE COUNTY, FLORIDA
METRO-DADE FLAGLER BUILDING
140 WEST FLAGLER STREET, SUITE 1603
MIAMI, FLORIDA 33130-1563
(305) 375-2901 FAX (305) 375-2908

NOTICE OF ACCEPTANCE (NOA)

Style View Products, Inc.
3561 N.W. 54th Street
Miami, Florida 33142

SCOPE:

This NOA is being issued under the applicable rules and regulations governing the use of construction materials. The documentation submitted has been reviewed by Miami-Dade County Product Control Division and accepted by the Board of Rules and Appeals (BORA) to be used in Miami Dade County and other areas where allowed by the Authority Having Jurisdiction (AHJ).

This NOA shall not be valid after the expiration date stated below. The Miami-Dade County Product Control Division (In Miami Dade County) and/or the AHJ (in areas other than Miami Dade County) reserve the right to have this product or material tested for quality assurance purposes. If this product or material fails to perform in the accepted manner, the manufacturer will incur the expense of such testing and the AHJ may immediately revoke, modify, or suspend the use of such product or material within their jurisdiction. BORA reserves the right to revoke this acceptance, if it is determined by Miami-Dade County Product Control Division that this product or material fails to meet the requirements of the applicable building code.

This product is approved as described herein, and has been designed to comply with the High Velocity Hurricane Zone of the Florida Building Code.

DESCRIPTION: 20 ga. (0.035" min.) Galvanized Steel Storm Panels Shutter

APPROVAL DOCUMENT: Drawing No. 01-252, titled " 20 gage Galvanized Steel Storm Panels ", sheets 1 through 9 of 9, prepared by Knezevich & Associates, Inc., dated March 07, 2001, bearing the Miami-Dade County Product Control Approval stamp with the Notice of Acceptance number and approval date by the Miami-Dade County Product Control Division.

MISSILE IMPACT RATING: Large and Small Missile Impact

LABELING: Each panel shall bear a permanent label with the manufacturer's name or logo, city, state and following statement: "Miami-Dade County Product Control Approved", unless otherwise noted herein.

RENEWAL of this NOA shall be considered after a renewal application has been filed and there has been no change in the applicable building code negatively affecting the performance of this product.

TERMINATION of this NOA will occur after the expiration date or if there has been a revision or change in the materials, use, and/or manufacture of the product or process. Misuse of this NOA as an endorsement of any product, for sales, advertising or any other purposes shall automatically terminate this NOA. Failure to comply with any section of this NOA shall be cause for termination and removal of NOA.

ADVERTISEMENT: The NOA number preceded by the words Miami-Dade County, Florida, and followed by the expiration date may be displayed in advertising literature. If any portion of the NOA is displayed, then it shall be done in its entirety.

INSPECTION: A copy of this entire NOA shall be provided to the user by the manufacturer or its distributors and shall be available for inspection at the job site at the request of the Building Official.

This NOA **revises NOA # 98-0923.05** and consists of this page 1 as well as approval document mentioned above. The submitted documentation was reviewed by **Helmy A. Makar, P.E.**

PRODUCT CONTROL ACCEPTED

NOA No 02-0312.02
Expiration Date: 04/25/2007
Approval Date: 04/25/2002

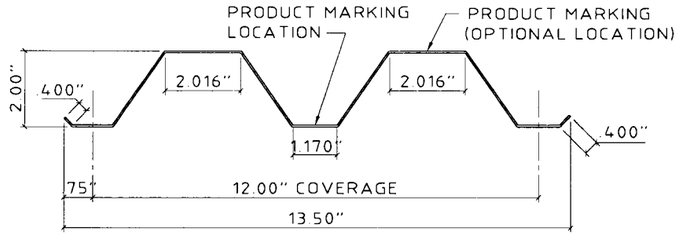

FULL PANEL

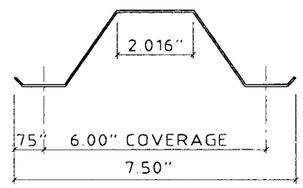

HALF PANEL

(1) **STORM PANEL**
SCALE: 3" = 1'-0"

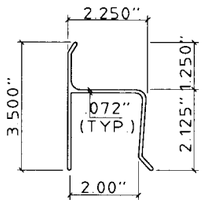

(2) **"h" HEADER**
SCALE: 3" = 1'-0"

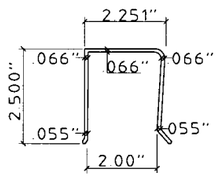

(3) **"U" HEADER**
SCALE: 3" = 1'-0"

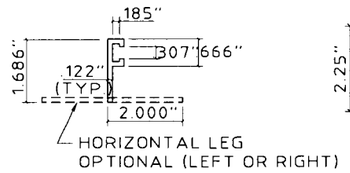

(4) **OPTIONAL ANGLE**
SCALE: 3" = 1'-0"

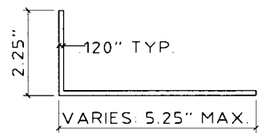

(5) **ANGLE**
SCALE: 3" = 1'-0"

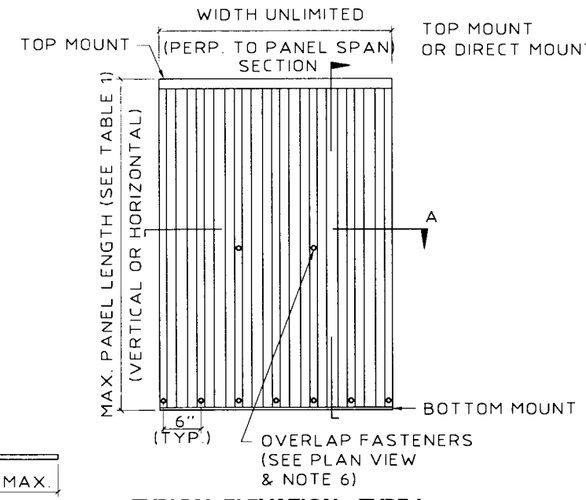

TYPICAL ELEVATION - TYPE I

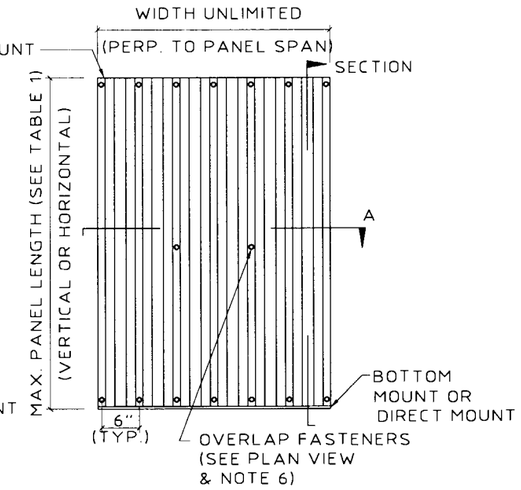

TYPICAL ELEVATION - TYPE II

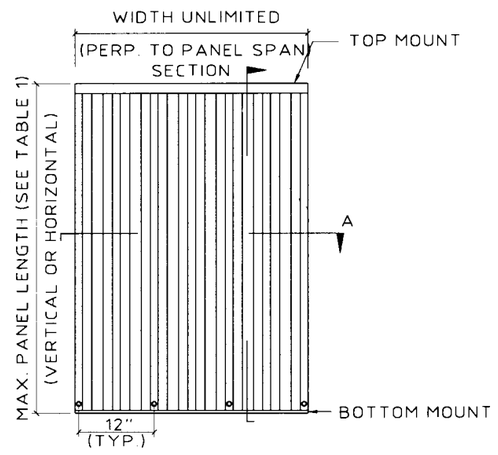

TYPICAL ELEVATION - TYPE III

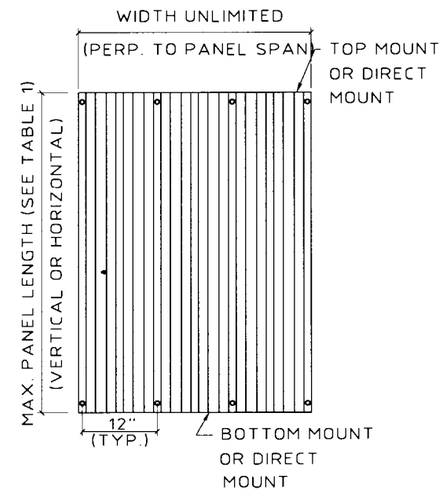

TYPICAL ELEVATION - TYPE IV

(NO BOLTS REQUIRED TO HOLD PANEL SEAMS TOGETHER FOR THESE MOUNTING CONDITIONS.)

GENERAL NOTES:

1. THIS SHUTTER SYSTEM IS DESIGNED IN ACCORDANCE WITH THE FLORIDA BUILDING CODE.
2. POSITIVE AND NEGATIVE DESIGN PRESSURE CALCULATIONS SHALL BE PERFORMED FOR SPECIFIC JOBS.
3. STORM PANELS SHALL BE 20 GAUGE STEEL (t = .035") CONFORMING TO A.S.T.M. A653, STRUCTURAL QUALITY, GRADE 50, G60 GALVANIZED COATING. ALUMINUM EXTRUSIONS SHALL BE 6063-T6, U.O.N.
4. PRODUCT MARKINGS SHALL BE WITHIN 12" OF ONE END OF THE PANEL WITH A MIN. OF ONE MARKING PER PANEL, AND SHALL BE LABELED AS FOLLOWS: **ALUMA CRAFT PRODUCTS MIAMI, FLORIDA MIAMI-DADE COUNTY PRODUCT CONTROL APPROVED**
5. ALL BOLTS AND WASHERS SHALL BE GALVANIZED OR STAINLESS STEEL WITH A MINIMUM TENSILE STRENGTH OF 60 K.S.I.
6. TYPE I & II PANELS LESS THAN OR EQUAL TO 88" IN HEIGHT SHALL BE FASTENED AT OVERLAPS AT MIDSPAN W/ 1/4-20 x 1" SIDEWALK BOLTS W/ DIE CAST ALUMINUM WASHERED WINGNUTS (SEE TYPICAL ELEVATIONS). TYPE I & II PANEL SPANS GREATER THAN 88" BUT LESS THAN 144", USE FASTENERS AT 1/3 SPANS. FOR TYPE I & II PANEL SPANS LESS THAN 33" FASTENERS ARE NOT REQUIRED. TYPE III & IV, NO BOLTS AT PANEL OVERLAPS ARE REQUIRED.
7. MATERIAL SPECIFICATIONS NOTED HEREIN ARE THE MANUFACTURER'S REPRESENTATION OF MATERIALS USED IN PRODUCT TESTING.
8. THE DETAILS AND SPECIFICATIONS SHOWN HEREIN REPRESENT THE PRODUCTS TESTED FOR IMPACT, CYCLIC AND UNIFORM STATIC AIR PRESSURE TESTING IN CONFORMANCE WITH MIAMI-DADE COUNTY PROTOCOLS PA 201, 203, AND 202.
   REFERENCE CONSTRUCTION TESTING CORPORATION (C.T.C.) TEST REPORTS No. 95-007, No. 95-026, 96-006 AND 96-006R.
9. TOP & BOTTOM DETAILS SHOWN MAY BE INTERCHANGED AS FIELD CONDITIONS DICTATE. PANELS MAY BE MOUNTED HORIZONTALLY WHERE APPLICABLE.
10. ANCHORS SHALL BE INSTALLED IN ACCORDANCE WITH MANUFACTURERS RECOMMENDATIONS. EMBEDMENT LENGTHS SHALL BE AS NOTED AND DO NOT INCLUDE STUCCO OR OTHER FINISHES.
11. AT LEAST ONE WARNING NOTE PER OPENING SHALL BE PLACED IN A CONSPICUOUS LOCATION ON ANY OF THE COMPONENTS OF STORM PANEL SYSTEM ADVISING THE HOME OWNER OR TENANT THAT THE STORM PANELS WILL NOT OFFER HURRICANE PROTECTION UNLESS ALL REINFORCING BOLTS ARE PROPERLY INSTALLED AS SHOWN ON THESE APPROVED DRAWING.

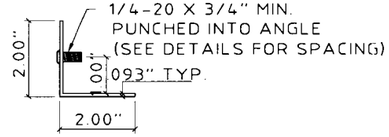

(6) **STUDDED ANGLE**
SCALE: 3" = 1'-0"

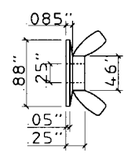

(ZAMAC 3 ALLOY)

(7) **WASHERED WINGNUT**
SCALE : HALF SIZE

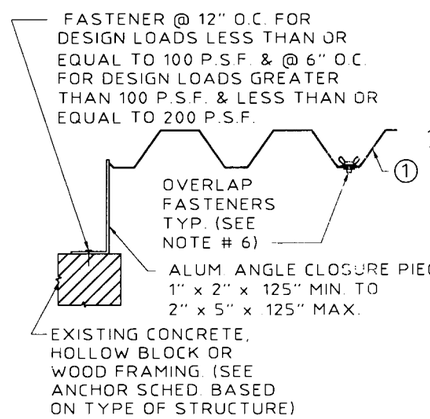

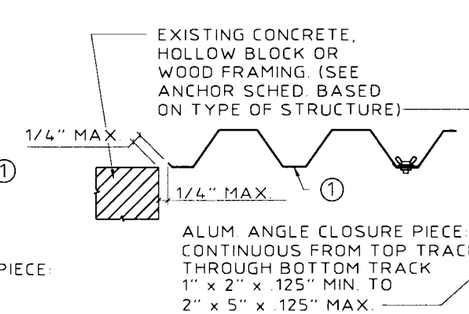

SECTION A
SCALE: 1-1/2" = 1'-0"

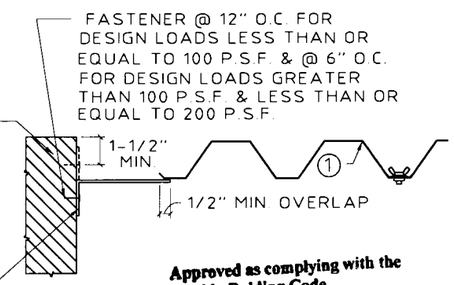

Approved as complying with the Florida Building Code,
Date 04/25/2002
NOA# 02-0312.02
Miami Dade Product Control Division
By Helmy A. Melo

KNEZEVICH & ASSOCIATES, INC.
CONSULTING ENGINEERS • PRODUCT TESTING
1260 N. UNIVERSITY DRIVE, SUITE 180 • FORT LAUDERDALE, FL 33322
TEL: (954) 382-2800 • FAX: (954) 382-2989 • FLORIDA COA #3205
WEBSITE: WWW.KNEZEVICH.COM • E-MAIL: KA@KNEZEVICH.COM

COPYRIGHT © 2001 KNEZEVICH & ASSOCIATES, INC

20 GAGE GALVANIZED STEEL STORM PANELS

Style View Products, Inc. d b a ALUMA CRAFT PRODUCTS
QUALITY PRODUCTS SINCE 1964
3561 N.W. 54TH STREET MIAMI, FLORIDA 33142 TEL: (305) 635-4555 FAX: (305) 635-4557

V.J. KNEZEVICH
PROFESSIONAL ENGINEER
FL License No: PE 0010983

MAR 07 2001

revisions			
no	date	by	description
0	03/07/01	VJK	PREV DRAWING NO. 98-172

date 03/07/01	
scale AS NOTED	drawn by MC
design by VJK	checked by VJK
drawing no. 01-252	
sheet 1 of 9	

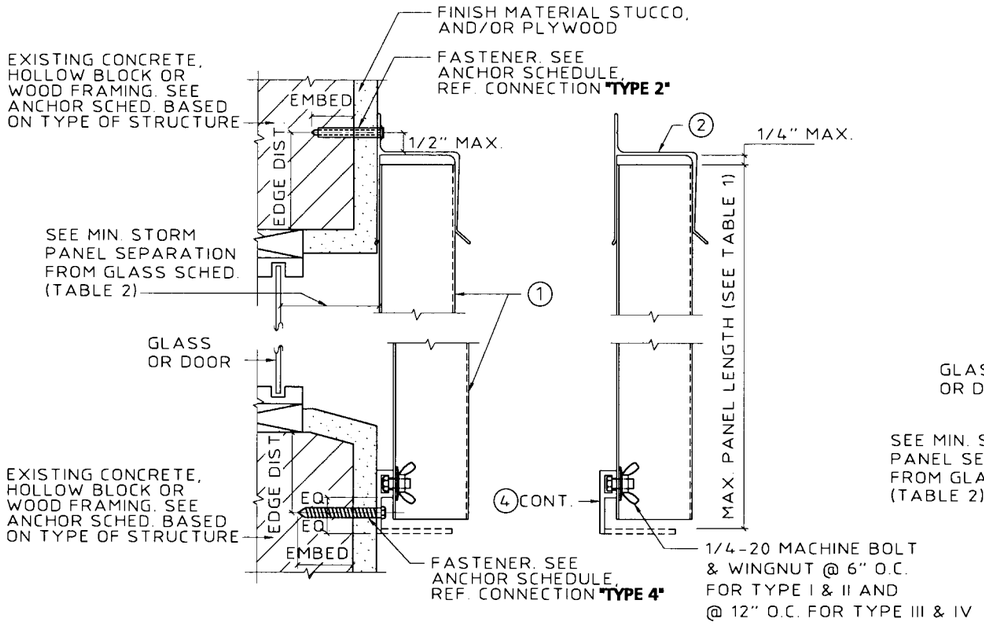

(A) WALL MOUNT SECTION
SCALE: 3" = 1'-0"

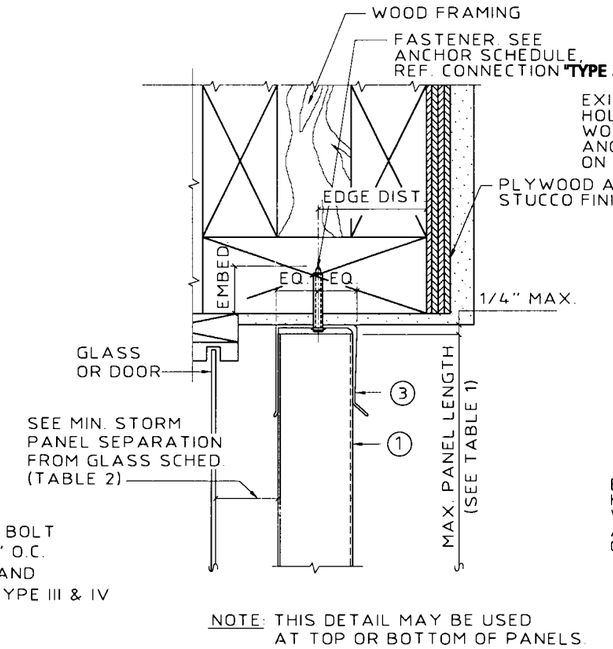

NOTE: THIS DETAIL MAY BE USED AT TOP OR BOTTOM OF PANELS.

(B) WOOD CEILING / INSIDE MOUNT SECTION
SCALE: 3" = 1'-0"

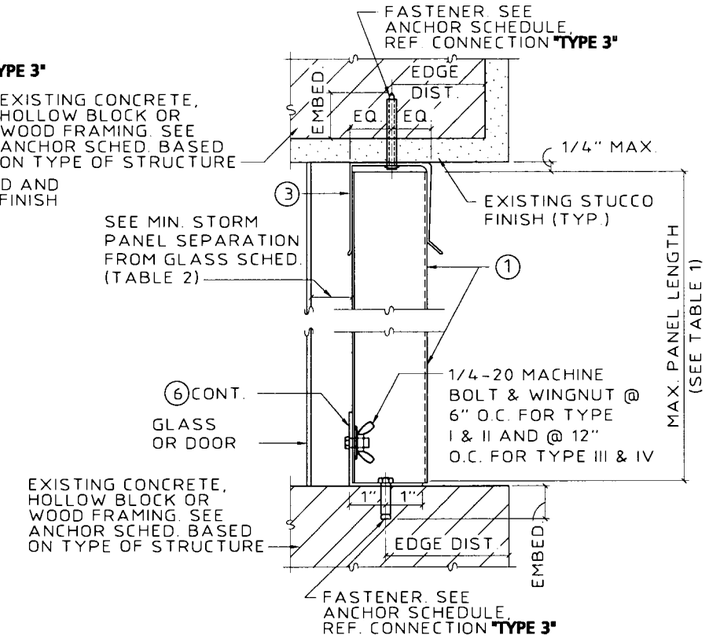

(C) CEILING / INSIDE MOUNT SECTION
SCALE: 3" = 1'-0"

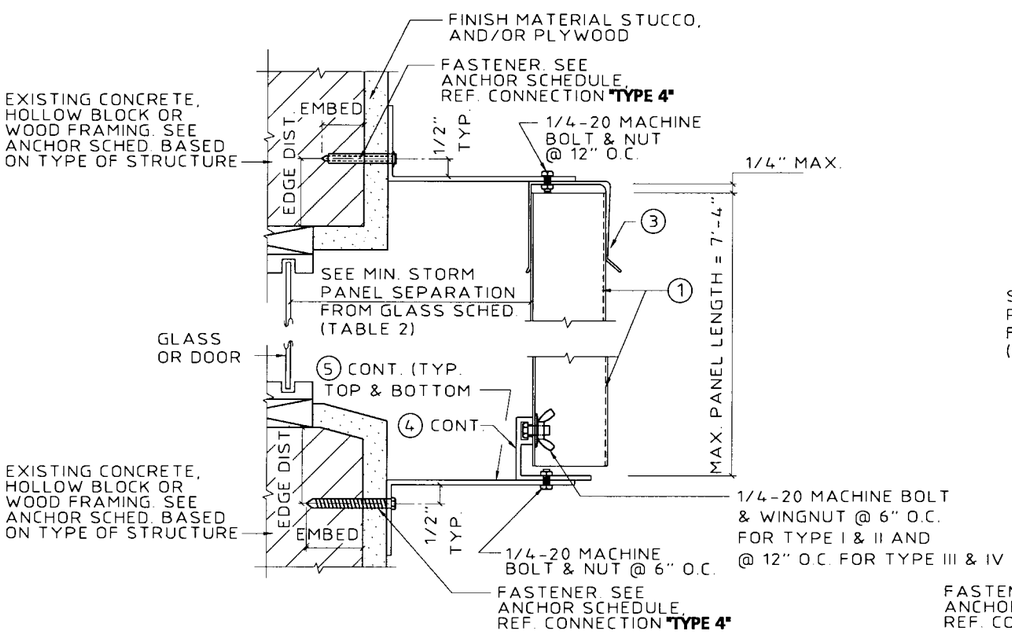

× SIDE CLOSURE REQ'D. (SEE PLAN VIEW SEC. A /1)

(MAX. DESIGN LOAD = +130 P.S.F. / −100 P.S.F.)

(E) BUILD-OUT MOUNT SECTION
SCALE: 3" = 1'-0"

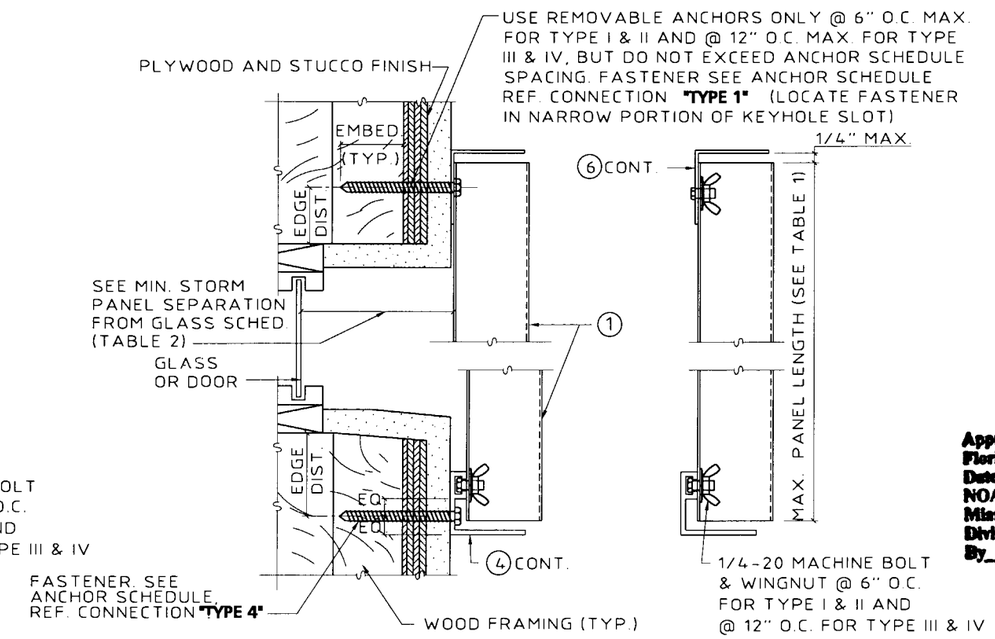

(E) WALL MOUNT SECTION
SCALE: 3" = 1'-0"

Approved as complying with the Florida Building Code
Date 04/25/2002
NOA# 01-0312.02
Miami Dade Product Control Division
By Helena A. Molina

KNEZEVICH & ASSOCIATES, INC.
CONSULTING ENGINEERS • PRODUCT TESTING
1260 N. UNIVERSITY DRIVE, SUITE 180 • FORT LAUDERDALE, FL 33322
TEL: (954) 382-2800 • FAX: (954) 382-2989 • FLORIDA COA #3205
WEBSITE: WWW.KNEZEVICH.COM • E-MAIL: KA@KNEZEVICH.COM
COPYRIGHT © 2001 KNEZEVICH & ASSOCIATES, INC

20 GAGE GALVANIZED STEEL STORM PANELS

Style View Products, Inc. d b a ALUMA CRAFT PRODUCTS
QUALITY PRODUCTS SINCE 1964
3561 N.W. 54TH STREET MIAMI, FLORIDA 33142 TEL: (305) 635-4555 FAX: (305) 635-4557

V.J. KNEZEVICH
PROFESSIONAL ENGINEER
FL License No: PE 0010983
MAR 07 2001

revisions			
no	date	by	description
0	03/07/01	VJK	PREV. DRAWING NO. 98-172

date 03/07/01
scale AS NOTED | drawn by MC
design by VJK | checked by VJK
drawing no. 01-252
sheet 2 of 9

03/07/01 09:00

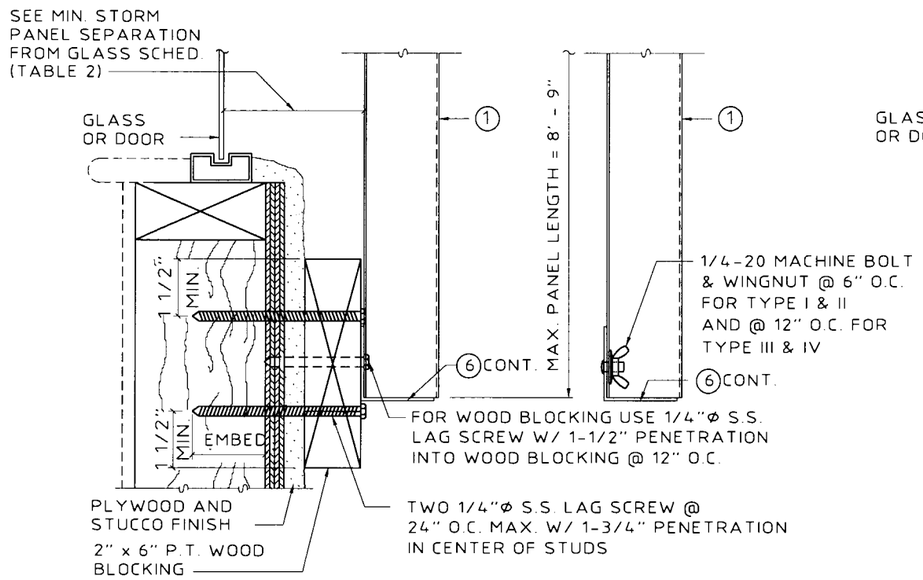

(MAX. DESIGN LOAD ± 72 P.S.F.)

NOTE: THIS DETAIL MAY BE USED AT TOP OR BOTTOM OF PANELS.

(F) WALL MOUNT SECTION (BOTTOM)
SCALE: 3" = 1'-0"

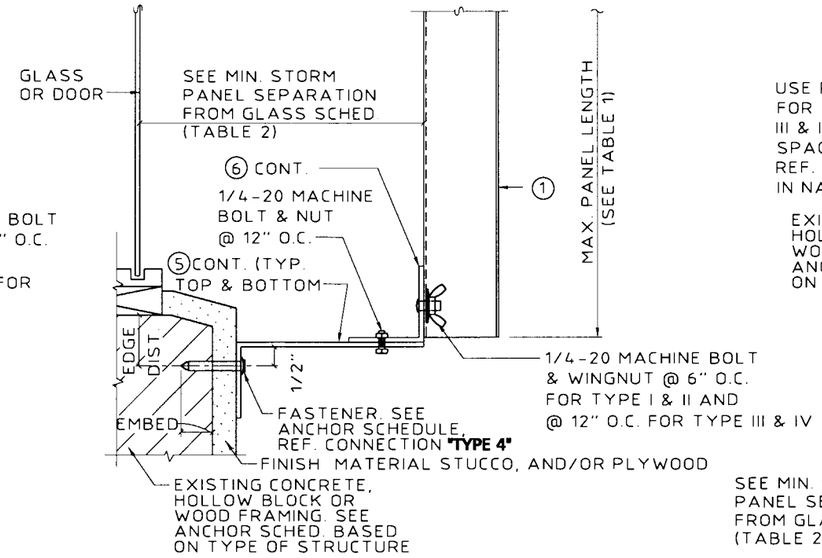

× SIDE CLOSURE REQ'D. (SEE PLAN VIEW SEC. A / 1)

NOTE: THIS DETAIL MAY BE USED AT TOP OR BOTTOM OF PANELS.

(G) ALT. BUILD-OUT MOUNT SECTION
SCALE: 3" = 1'-0"

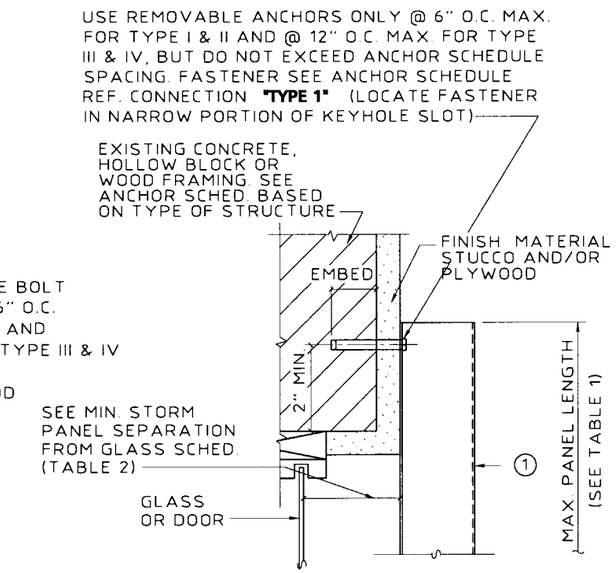

(H) DIRECT MOUNT DETAIL
SCALE: 3" = 1'-0"

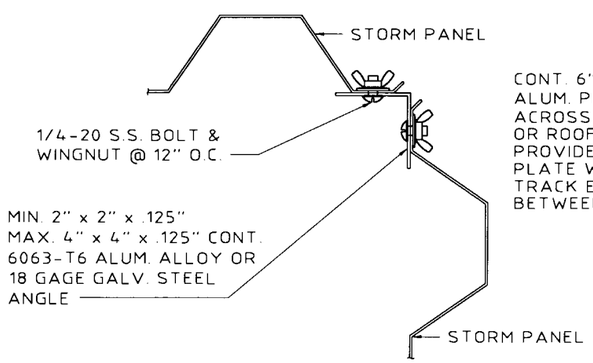

(I) CORNER DETAIL
SCALE: 3" = 1'-0"

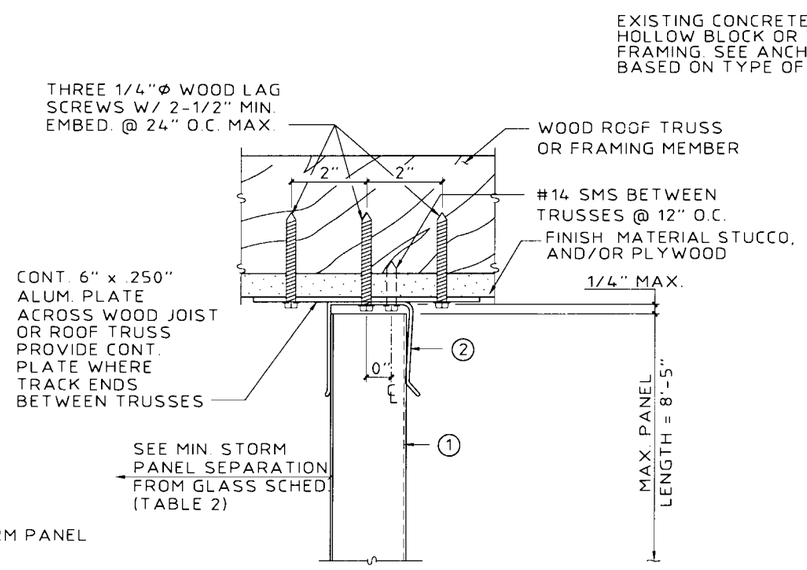

(MAX. DESIGN LOAD ± 72 P.S.F.)

(J) SOFFIT CONNECTION DETAIL
SCALE: 3" = 1'-0"

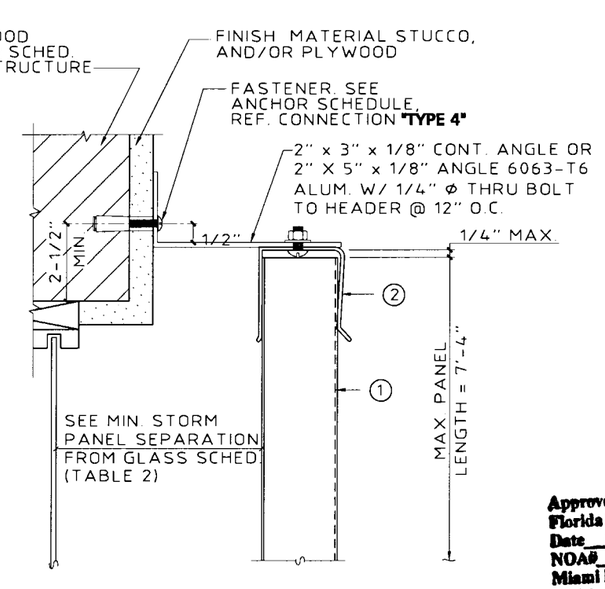

(MAX. DESIGN LOAD ± 72 P.S.F.)

(K) ANGLE BUILD-OUT
SCALE: 3" = 1'-0"

Approved as complying with the Florida Building Code
Date 04/25/2002
NOA# 02-03[illegible]
Miami Dade Product Control Division
By [illegible]

KNEZEVICH & ASSOCIATES, INC.
CONSULTING ENGINEERS • PRODUCT TESTING
1260 N. UNIVERSITY DRIVE, SUITE 180 • FORT LAUDERDALE, FL 33322
TEL: (954) 382-2800 • FAX: (954) 382-2989 • FLORIDA COA #3205
WEBSITE: WWW.KNEZEVICH.COM • E-MAIL: KA@KNEZEVICH.COM

COPYRIGHT © 2001 KNEZEVICH & ASSOCIATES, INC

20 GAGE GALVANIZED STEEL STORM PANELS

Style View Products, Inc.
d b a
ALUMA CRAFT PRODUCTS
QUALITY PRODUCTS SINCE 1964
3561 N.W. 54TH STREET MIAMI, FLORIDA 33142
TEL: (305) 635-4555
FAX: (305) 635-4557

V.J. KNEZEVICH
PROFESSIONAL ENGINEER
FL License No: PE 0010983
MAR 07 2001

revisions			
no	date	by	description
0	03/07/01	VJK	PREV. DRAWING NO. 98-772

date 03/07/01
scale AS NOTED
drawn by MC
design by VJK
checked by VJK
drawing no. 01-252
sheet 3 of 9

03/07/01 09:00

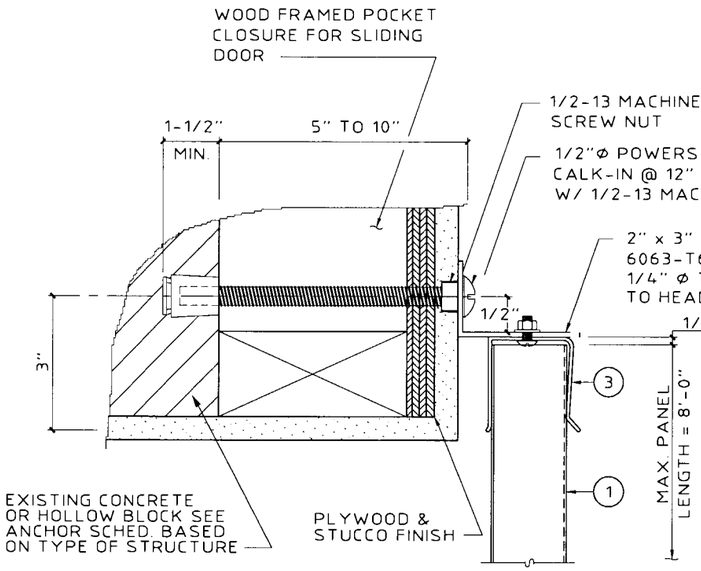

(MAX. DESIGN LOAD ± 72 P.S.F.)

(L) POCKET DOOR DETAIL
SCALE: 3" = 1'-0"

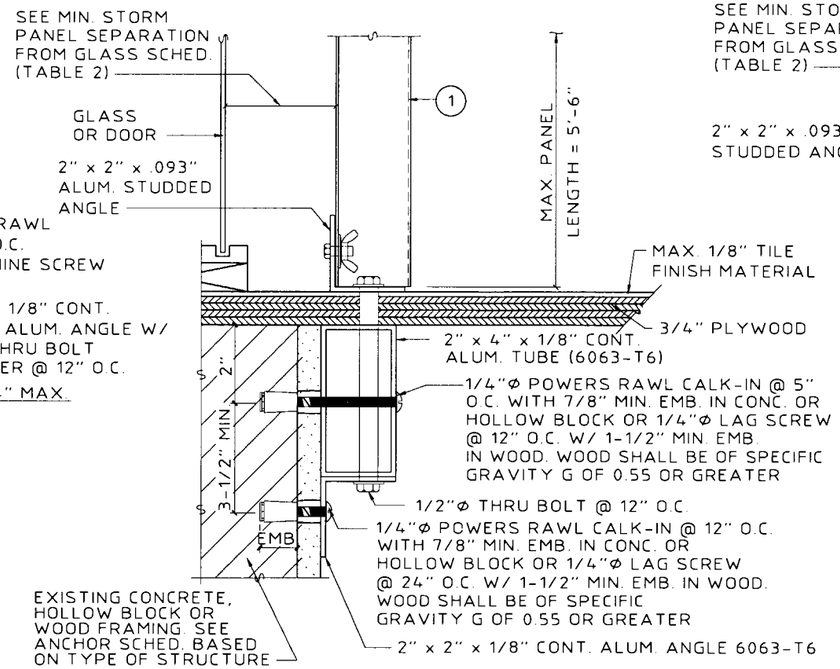

(MAX. DESIGN LOAD ± 72 P.S.F.)

(M) "PASS THRU" DETAIL
SCALE: 3" = 1'-0"

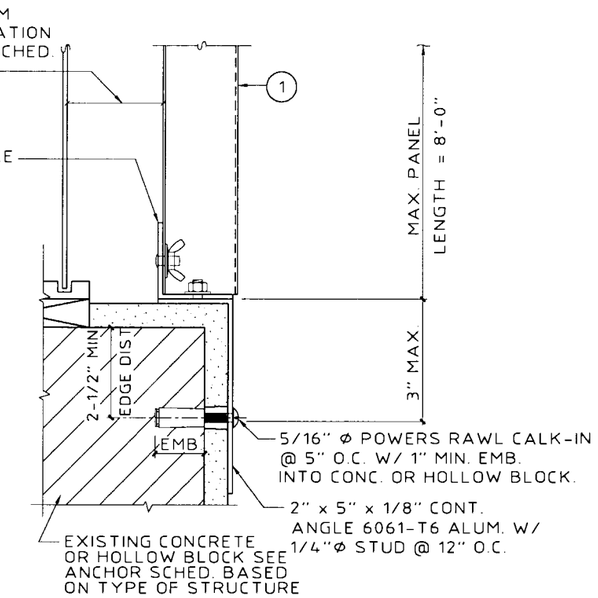

NOTES THIS DETAIL MAY BE USED AT TOP OR BOTTOM OF PANEL.

(MAX. DESIGN LOAD ± 72 P.S.F.)

(N) EDGE MOUNT DETAIL
SCALE: 3" = 1'-0"

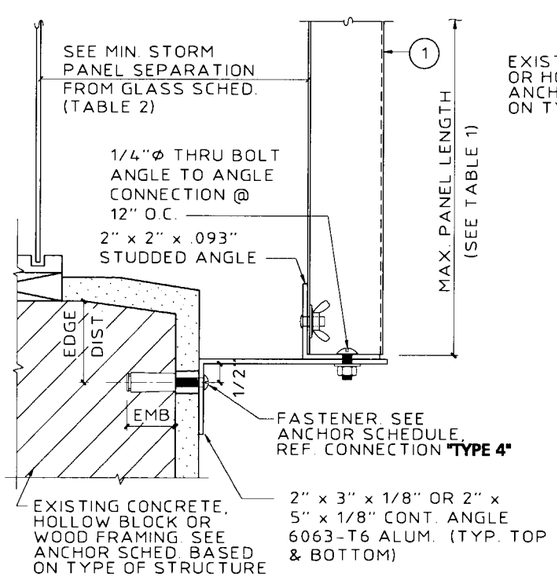

NOTES THIS DETAIL MAY BE USED AT TOP OR BOTTOM OF PANEL.

(O) ANGLE BUILD-OUT
SCALE: 3" = 1'-0"

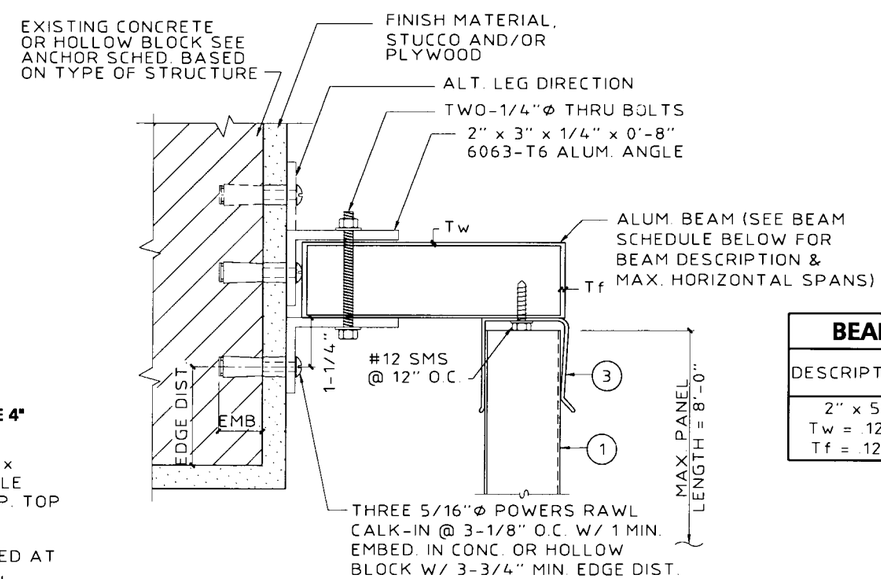

(MAX. DESIGN LOAD ± 72 P.S.F.)

(P) HEADER MOUNT DETAIL
SCALE: 3" = 1'-0"

BEAM SCHEDULE

DESCRIPTION	PANEL LENGTH	BEAM SPAN
2" x 5" Tw = .125" Tf = .125"	5'-0"	9'-5"
	8'-0"	8'-1"

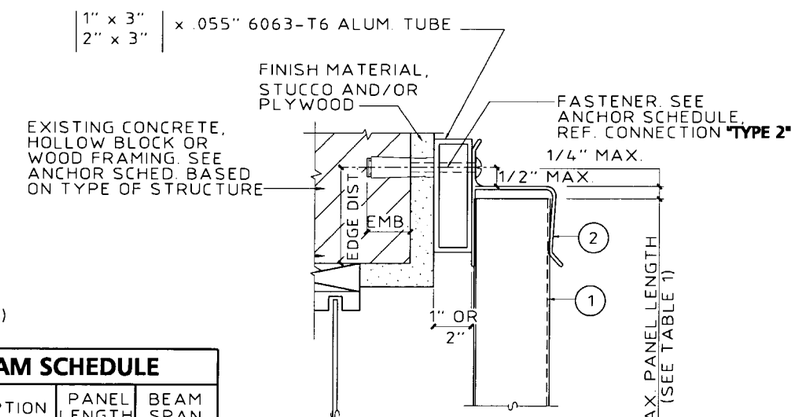

(Q) HEADER MOUNT DETAIL
SCALE: 3" = 1'-0"

Approved as complying with the Florida Building Code
Date 04/25/2002
NOA# 01-0372.02
Miami Dade Product Control Division
By Helmy A Mola

KNEZEVICH & ASSOCIATES, INC.
CONSULTING ENGINEERS • PRODUCT TESTING
1260 N. UNIVERSITY DRIVE, SUITE 180 • FORT LAUDERDALE, FL 33322
TEL: (954) 382-2800 • FAX: (954) 382-2989 • FLORIDA COA #3205
WEBSITE: WWW.KNEZEVICH.COM • E-MAIL: KA@KNEZEVICH.COM
COPYRIGHT © 2001 KNEZEVICH & ASSOCIATES, INC.

20 GAGE GALVANIZED STEEL STORM PANELS

Style View Products, Inc.
d b a
ALUMA CRAFT PRODUCTS
QUALITY PRODUCTS SINCE 1964
3561 N.W. 54TH STREET MIAMI, FLORIDA 33142
TEL: (305) 635-4555
FAX: (305) 635-4557

V.J. KNEZEVICH
PROFESSIONAL ENGINEER
FL License No: PE 0010983
MAR 07 2001

revisions

no	date	by	description
0	03/07/01	VJK	PREV. DRAWING NO. 98-JF72

date 03/07/01
scale AS NOTED
drawn by MC
design by VJK
checked by VJK
drawing no. 01-252
sheet 4 of 9

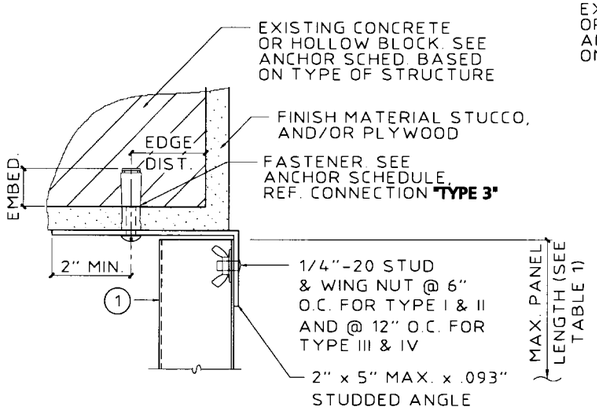

R TRAP MOUNT DETAIL
SCALE: 3" = 1'-0"

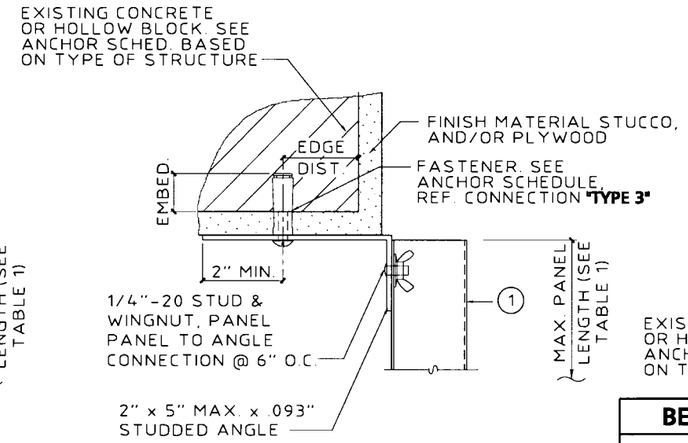

S ALT. TRAP MOUNT DETAIL
SCALE: 3" = 1'-0"

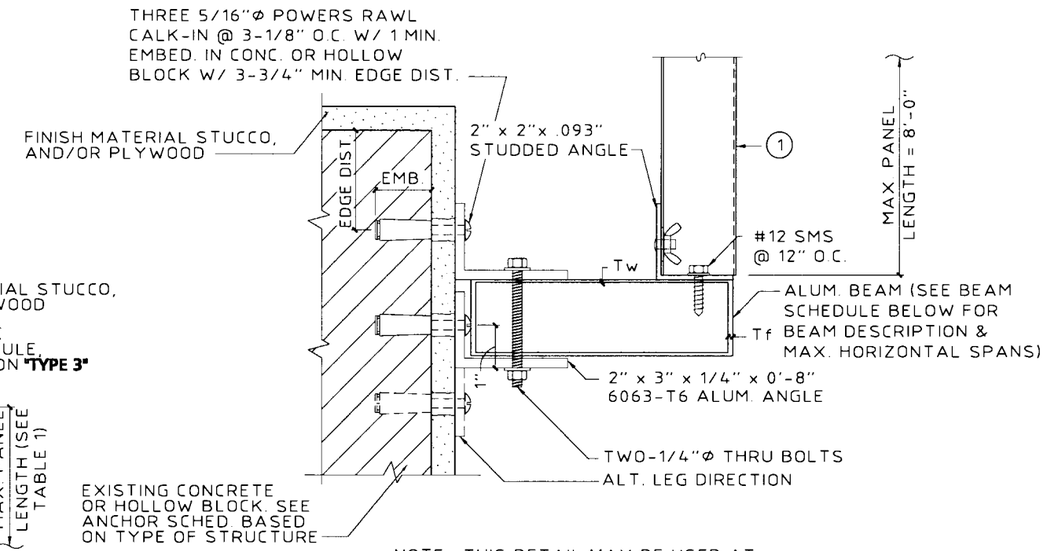

NOTE: THIS DETAIL MAY BE USED AT TOP OR BOTTOM OF PANEL.

(MAX. DESIGN LOAD ± 72 P.S.F.)

BEAM SCHEDULE

DESCRIPTION	PANEL LENGTH	BEAM SPAN
2" x 5" Tw = .125" Tf = .125"	5'-0"	9'-5"
	8'-0"	8'-1"

T STORM PANEL SUPPORT BEAM
SCALE: 3" = 1'-0"

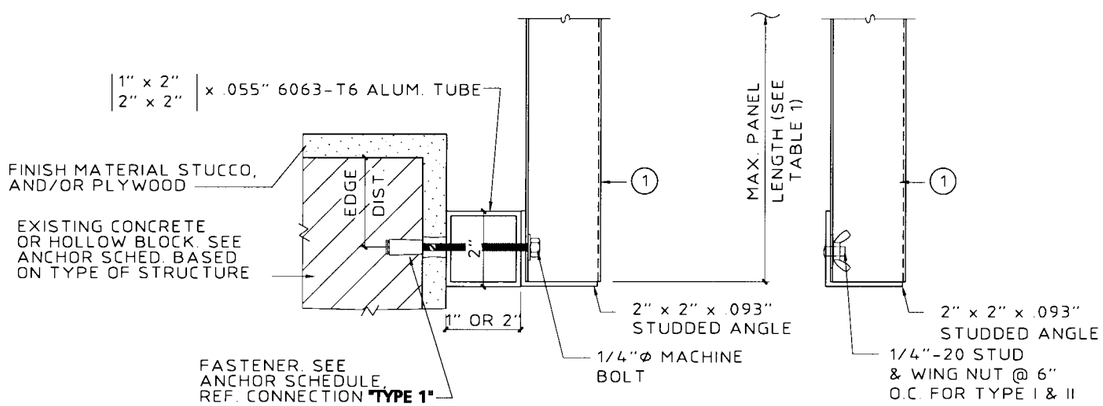

NOTE: THIS DETAIL MAY BE USED AT TOP OR BOTTOM OF PANEL.

U 2" x 2" ALUM. TUBE BUILD-OUT
SCALE: 3" = 1'-0"

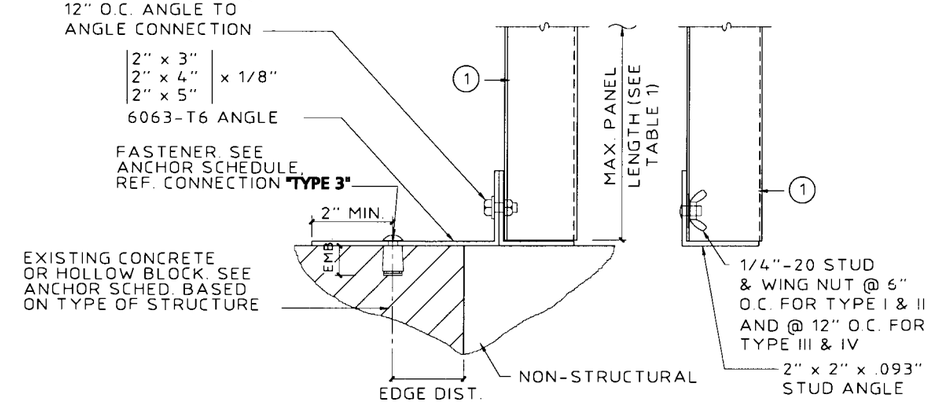

NOTE: THIS DETAIL MAY BE USED AT TOP OR BOTTOM OF PANEL.

V STORM PANEL BUILD-OUT
SCALE: 3" = 1'-0"

Approved as complying with the Florida Buiding Code
Date 04/25/2002
NOA# 02-0312.02
Miami Dade Product Control Division
By Helmy A. Moh

KNEZEVICH & ASSOCIATES, INC.
CONSULTING ENGINEERS • PRODUCT TESTING
1260 N. UNIVERSITY DRIVE, SUITE 180 • FORT LAUDERDALE, FL 33322
TEL: (954) 382-2800 • FAX: (954) 382-2989 • FLORIDA COA #3205
WEBSITE: WWW.KNEZEVICH.COM • E-MAIL: KA@KNEZEVICH.COM
COPYRIGHT © 2001 KNEZEVICH & ASSOCIATES, INC

20 GAGE GALVANIZED STEEL STORM PANELS

Style View Products, Inc.
d b a
ALUMA CRAFT PRODUCTS
QUALITY PRODUCTS SINCE 1964
3561 N.W. 54TH STREET TEL: (305) 635-4555
MIAMI, FLORIDA 33142 FAX: (305) 635-4557

V.J. KNEZEVICH
PROFESSIONAL ENGINEER
FL License No: PE 0010983

MAR 07 2001

revisions			
no	date	by	description
0	03/07/01	VJK	PREV DRAWING NO. 98-172

date 03/07/01
scale AS NOTED
drawn by MC
design by VJK
checked by VJK
drawing no. 01-252
sheet 5 of 9

TABLE 1 - STORM PANEL SCHEDULE

NEGATIVE DESIGN LOAD W (P.S.F.)	TYPE I	TYPE II	TYPE III	TYPE IV
	"U" & "H" HEADERS WITH STUD SILLS @ 6" O.C. OR "F" TRACK WITH BOLTS @ 6" O.C. *	FOR STUDDED ANGLE MOUNTS, "F" TRACK MOUNTS W/ STUDS @ 6" O.C. & DIRECT MOUNTS W/ ANCHORS @ 6" O.C. (TOP & BOTTOM) *	"U" & "H" HEADERS WITH STUD SILLS @ 12" O.C. OR "F" TRACK WITH BOLTS @ 12" O.C. * *	FOR STUDDED ANGLE MOUNTS, "F" TRACK MOUNTS W/ STUDS @ 12" O.C. & DIRECT MOUNTS W/ ANCHORS @ 12" O.C. MAX. (TOP & BOTTOM) * *
	L MAX. (FT-IN)	L MAX. (FT-IN)	L MAX. (FT-IN)	L MAX. (FT-IN)
30.0	8 - 8	12 - 0	8 - 8	12 - 0
40.0	8 - 8	11 - 10	8 - 8	11 - 6
50.0	8 - 8	11 - 1	8 - 8	10 - 3
60.0	8 - 8	10 - 2	8 - 8	9 - 4
70.0	8 - 8	9 - 5	8 - 8	8 - 8
80.0	8 - 6	8 - 9	8 - 1	8 - 1
90.0	8 - 0	8 - 3	7 - 2	7 - 8
100.0	7 - 4	7 - 10	6 - 6	7 - 3
110.0	6 - 8	7 - 6	5 - 10	6 - 11
120.0	6 - 2	7 - 2	5 - 5	6 - 7
130.0	5 - 7	6 - 10	5 - 0	6 - 4
140.0	5 - 3	6 - 7	4 - 7	6 - 1
150.0	4 - 10	6 - 5	4 - 3	5 - 11
160.0	4 - 7	6 - 2	4 - 0	5 - 9
170.0	4 - 4	5 - 10	3 - 9	5 - 7
180.0	4 - 0	5 - 6	3 - 7	5 - 5
190.0	3 - 10	5 - 3	3 - 5	5 - 3
200.0	3 - 8	4 - 11	3 - 3	4 - 11
210.0	3 - 6	4 - 9	3 - 1	4 - 9
220.0	3 - 4	4 - 6	2 - 11	4 - 6
230.0	3 - 2	4 - 4	2 - 9	4 - 4

TABLE 2 - SEPARATION FROM GLASS SCHEDULE

POSITIVE DESIGN LOAD (W) (P.S.F.)	ACTUAL SHUTTER SPAN (L) (FT-IN)	MINIMUM SEPARATION FOR INSTALLATIONS 30' OR LESS ABOVE GRADE (INCHES)	MINIMUM SEPARATION FOR INSTALLATIONS GREATER THAN 30' ABOVE GRADE (INCHES)
30.0	5 - 0	2-5/8	1-1/8
	7 - 4	2-5/8	1-3/8
	11 - 3 1/2	2-7/8	2-1/4
	12 - 0	3-1/4	2-5/8
40.0	5 - 0	2-5/8	1-1/8
	7 - 4	2-5/8	1-3/8
	11 - 3 1/2	2-7/8	2-5/8
	11 - 10	3-1/4	3
50.0	5 - 0	2-3/4	1-1/8
	7 - 4	2-3/4	1-1/2
	11 - 2	3	3
60.0	5 - 0	2-5/8	1-1/4
	7 - 4	2-5/8	1-1/2
	10 - 8	3	3
70.0	5 - 0	2-5/8	1-1/4
	7 - 4	2-5/8	1-5/8
	10 - 3	3	3
80.0	5 - 0	2-5/8	1-1/8
	7 - 4	2-5/8	1-5/8
	9 - 11	3	3
90.0	4 - 0	2-5/8	1-1/8
	7 - 4	2-5/8	1-3/4
	9 - 7	3	3
100.0	4 - 0	2-5/8	1-1/8
	7 - 4	2-5/8	1-7/8
	9 - 1	3	3
110.0	4 - 0	2-5/8	1-1/8
	7 - 4	2-5/8	1-1/2
	8 - 8	3	3
120.0	4 - 0	2-5/8	1-1/8
	7 - 4	2-5/8	1-1/2
	8 - 4	2-7/8	2-5/8

TABLE 1 AND 2 NOTES:

1. ENTER TABLE 1 WITH NEGATIVE DESIGN LOAD TO DETERMINE MAX. ALLOWABLE STORM PANEL SPAN.
2. FOR DESIGN LOADS BETWEEN TABULATED VALUES, USE NEXT HIGHER LOAD OR LINEAR INTERPOLATION MAY BE USED TO DETERMINE MAX. ALLOWABLE STORM PANEL SPANS.
3. ENTER TABLE 2 WITH POSITIVE DESIGN LOAD TO DETERMINE MIN. STORM PANEL SEPARATION FROM GLASS.
4. * = FOR TYPE I & II - BOLTS REQUIRED @ MIDSPAN TO HOLD PANEL SEAMS TOGETHER.
   * * = FOR TYPE III & IV - NO BOLTS REQUIRED TO HOLD PANEL SEAMS TOGETHER.

Approved as complying with the Florida Building Code
Date 04/25/2002
NOA# 02-0312.02
Miami Dade Product Control Division
By Helmy A. Mekar

KNEZEVICH & ASSOCIATES, INC.
CONSULTING ENGINEERS • PRODUCT TESTING
1260 N. UNIVERSITY DRIVE, SUITE 180 • FORT LAUDERDALE, FL 33322
TEL: (954) 382-2800 • FAX: (954) 382-2989 • FLORIDA COA #3205
WEBSITE: WWW.KNEZEVICH.COM • E-MAIL: KA@KNEZEVICH.COM
COPYRIGHT © 2001 KNEZEVICH & ASSOCIATES, INC.

20 GAGE GALVANIZED STEEL STORM PANELS

Style View Products, Inc.
d b a
ALUMA CRAFT PRODUCTS
QUALITY PRODUCTS SINCE 1964
3561 N.W. 54TH STREET TEL: (305) 635-4555
MIAMI, FLORIDA 33142 FAX: (305) 635-4557

V.J. KNEZEVICH
PROFESSIONAL ENGINEER
FL License No: PE 0010983
MAR 07 2001

revisions

no	date	by	description
0	03/07/01	VJK	PREV DRAWING NO 98172

date 03/07/01
scale AS NOTED
drawn by MC
design by VJK
checked by VJK
drawing no. 01-252
sheet 6 of 9

ANCHOR SCHEDULE

FASTENER SPACING (INCHES) REQUIRED FOR VARIOUS DESIGN LOADS AND SPANS

EXISTING STRUCTURE	ANCHOR TYPE	LOAD (W) PSF MAX. (SEE NOTE 1)	MIN. 3/4" EDGE DISTANCE														
			SPANS UP TO 5'-0" (SEE NOTE 1)					SPANS UP TO 8'-6" (SEE NOTE 1)					SPANS UP TO 12'-0" (SEE NOTE 1)				
			CONNECTION TYPE					CONNECTION TYPE					CONNECTION TYPE				
			1	2	3	4	5	1	2	3	4	5	1	2	3	4	5
WOOD	1/4"Ø WOOD LAG SCREW W/ 1-3/4" THREAD PENETRATION (SHEAR PARALLEL TO GRAIN)	48.0	12	12	12	12	12	12	12	9	12	12	12	6	6	12	12
		62.0	12	12	12	12	12	12	7	7	12	12	12	5	6	12	11
		72.0	12	12	10	12	12	12	5	6	12	12	12	5	6	12	11
		92.0	12	9	8	12	12	12	5	6	12	11	12	5	6	12	11
		200.0	12	5	6	12	11	12	5	6	12	11	12	5	6	12	11
	1/4"Ø WOOD LAG SCREW W/ 1-3/4" THREAD PENETRATION (SHEAR PERPENDICULAR TO GRAIN)	48.0	12	12	12	12	12	12	12	7	12	12	12	6	5	12	12
		62.0	12	12	9	12	12	12	7	5	12	12	12	5	4	12	11
		72.0	12	12	8	12	12	12	5	4	12	12	12	5	4	12	11
		92.0	12	9	6	12	12	12	5	4	12	11	12	5	4	12	11
		200.0	12	5	4	12	11	12	5	4	12	11	12	5	4	12	11
	* * 1/4"Ø ELCO MALE/ FEMALE "PANELMATE" W/ 1-7/8 MIN. EMBEDMENT & 1/4-20 MACHINE SCREW WITH NUT	48.0	12	12	12	12	12	12	12	12	12	12	12	7	9	12	12
		62.0	12	12	12	12	12	12	8	9	12	12	12	6	8	12	12
		72.0	12	12	12	12	12	12	6	8	12	12	12	6	8	12	12
		92.0	12	10	11	12	12	12	6	8	12	12	12	6	8	12	12
		200.0	12	6	8	12	12	12	6	8	12	12	12	6	8	12	12
	* 7/16"Ø BRASS WOOD BUSHING W/ 5/8" EMBED. AND 3/4" MIN. EDGE DISTANCE	48.0	12	12	12	12	12	12	5	7	12	12	10	3	5	10	8
		62.0	12	12	9	12	12	11	3	5	11	11	9		4	9	5
		72.0	12	7	8	12	12	10		4	10	6	9		4	9	5
		92.0	12	4	6	12	12	9		4	9	5	9		4	9	5
		200.0	9		4	9	5	9		4	9	5	9		4	9	5

ANCHOR NOTES:

1. **SPANS & LOADS SHOWN HERE ARE FOR DETERMINING ANCHOR SPACING ONLY. ALLOWABLE SHUTTER SPANS FOR SPECIFIC LOADS MUST BE LIMITED TO THOSE SHOWN IN TABLE 1, SHEET 6.**
2. ENTER TABLE BASED ON THE EXISTING STRUCTURE MATERIAL, ANCHOR TYPE AND EDGE DISTANCE. SELECT DESIGN LOAD GREATER THAN OR EQUAL TO NEGATIVE DESIGN LOAD ON SHUTTER AND SELECT SPAN GREATER THAN OR EQUAL TO SHUTTER SPAN.
3. EXISTING STRUCTURE MAY BE CONCRETE, HOLLOW BLOCK OR WOOD FRAMING. REFERENCE ANCHOR SCHEDULE FOR PROPER ANCHOR TYPE BASED ON TYPE OF EXISTING STRUCTURE AND APPROPRIATE CONNECTION TYPE. SEE CONNECTION DETAILS FOR IDENTIFICATION OF CONNECTION TYPE.
4. ANCHORS SHALL BE INSTALLED IN ACCORDANCE WITH MANUFACTURERS' RECOMMENDATIONS.
5. MINIMUM EMBEDMENT AND EDGE DISTANCE EXCLUDES WALL FINISH OR STUCCO.
6. WHERE EXISTING STRUCTURE IS WOOD FRAMING, WOOD FRAMING CONDITIONS VARY. FIELD VERIFY THAT FASTENERS ARE INTO ADEQUATE WOOD FRAMING MEMBERS, NOT PLYWOOD.
7. WHERE LAG SCREWS FASTEN TO NARROW FACE OF STUD FRAMING, FASTENER SHALL BE LOCATED IN CENTER OF NOMINAL 2"x4" (MIN.) WOOD STUD. 3/4" EDGE DISTANCE IS ACCEPTABLE FOR WOOD FRAMING. WOOD STUD SHALL BE "SOUTHERN PINE" G=0.55 OR GREATER DENSITY. LAG SCREWS SHALL HAVE PHILLIPS PAN HEAD OR HEX HEAD.
8. MACHINE SCREWS SHALL HAVE MINIMUM OF 1/2" ENGAGEMENT OF THREADS IN BASE ANCHOR AND MAY HAVE EITHER A PAN HEAD, TRUSS HEAD, OR WAFER HEAD (SIDEWALK BOLT), U.O.N.
9. DESIGNATES ANCHOR CONDITIONS WHICH ARE NOT ACCEPTABLE USES.

* DESIGNATES ANCHOR WHICH ARE REMOVABLE BY REMOVING WASHERED WINGNUT, NUT OR MACHINE SCREW.

Approved as complying with the Florida Building Code
Date 04/25/2002
NOA# 02-0312.02
Miami Dade Product Control Division
By

KNEZEVICH & ASSOCIATES, INC.
CONSULTING ENGINEERS • PRODUCT TESTING
1260 N. UNIVERSITY DRIVE, SUITE 180 • FORT LAUDERDALE, FL 33322
TEL: (954) 382-2800 • FAX: (954) 382-2989 • FLORIDA COA #3205
WEBSITE: WWW.KNEZEVICH.COM • E-MAIL: KA@KNEZEVICH.COM
COPYRIGHT © 2001 KNEZEVICH & ASSOCIATES, INC.

20 GAGE GALVANIZED STEEL STORM PANELS

Style View Products, Inc. d b a ALUMA CRAFT PRODUCTS
QUALITY PRODUCTS SINCE 1964
3561 N.W. 54TH STREET TEL: (305) 635-4555
MIAMI, FLORIDA 33142 FAX: (305) 635-4557

V.J. KNEZEVICH
PROFESSIONAL ENGINEER
FL License No: PE 0010983

MAR 07 2001

revisions			
no	date	by	description
0	03/07/01	VJK	PREV. DRAWING NO. 98-172

date 03/07/01
scale AS NOTED
drawn by MC
design by VJK
checked by VJK
drawing no. 01-252
sheet 7 of 9

ANCHOR SCHEDULE

FASTENER SPACING (INCHES) REQUIRED FOR VARIOUS DESIGN LOADS AND SPANS

EXISTING STRUCTURE	ANCHOR TYPE	LOAD (W) P.S.F. MAX. (SEE NOTE 1)	MIN. 2" EDGE DISTANCE															MIN. 3" EDGE DISTANCE														
			SPANS UP TO 5'-0" (SEE NOTE 1)					SPANS UP TO 8'-6" (SEE NOTE 1)					SPANS UP TO 12'-0" (SEE NOTE 1)					SPANS UP TO 5'-0" (SEE NOTE 1)					SPANS UP TO 8'-6" (SEE NOTE 1)					SPANS UP TO 12'-0" (SEE NOTE 1)				
			CONNECTION TYPE					CONNECTION TYPE					CONNECTION TYPE					CONNECTION TYPE					CONNECTION TYPE					CONNECTION TYPE				
			1	2	3	4	5	1	2	3	4	5	1	2	3	4	5	1	2	3	4	5	1	2	3	4	5	1	2	3	4	5
CONCRETE	1/4"Φ ITW TAPCON W/ 1-1/4" MIN. EMBEDMENT (MIN. 3,100 P.S.I. CONCRETE)	48.0	12	12	12	12	12	12	6	7	12	12	12	3	5	12	9	12	12	12	12	12	12	8	12	12	12	12	4	8	12	11
		62.0	12	12	10	12	12	12	4	6	12	12	11	3	5	11	6	12	12	12	12	12	12	5	9	12	12	12	3	7	12	7
		72.0	12	9	9	12	12	11	3	5	11	7	11	3	5	11	6	12	11	12	12	12	12	4	8	12	9	12	3	7	12	7
		92.0	12	5	7	12	12	11	3	5	11	6	11	3	5	11	6	12	6	10	12	12	12	3	7	12	7	12	3	7	12	7
		200.0	11	3	5	11	6	11	3	5	11	6	11	3	5	11	6	12	3	7	12	7	12	3	7	12	7	12	3	7	12	7
	* * 1/4"Φ ELCO MALE/ FEMALE "PANELMATE" W/ 1-1/4 MIN. EMBEDMENT & 1/4-20 MACHINE SCREW WITH NUT (MIN. 3,000 P.S.I. CONCRETE)	48.0	12	12	12	12	12	12	5	7	12	12	11	3	5	11	8	12	12	12	12	12	12	6	8	12	12	11	3	6	11	8
		62.0	12	12	9	12	12	12	3	5	12	12	10		4	10	5	12	12	11	12	12	12	3	6	12	12	10		5	10	5
		72.0	12	8	8	12	12	10		4	10	6	10		4	10	5	12	8	9	12	12	10		5	10	6	10		5	10	5
		92.0	12	4	6	12	12	10		4	10	5	10		4	10	5	12	4	7	12	12	10		5	10	5	10		5	10	5
		200.0	10		4	10	5	10		4	10	5	10		4	10	5	10		5	10	5	10		5	10	5	10		5	10	5
	* 1/4"Φ POWERS RAWL CALK-IN W/ 7/8" EMBEDMENT & 1/4-20 STAINLESS STEEL MACHINE SCREW (MIN. 3,000 P.S.I. CONCRETE)	48.0	12	12	12	12	12	12	12	10	12	12	12	6	7	12	12	12	12	12	12	12	12	12	12	12	12	12	8	12	12	12
		62.0	12	12	12	12	12	12	7	8	12	12	12	5	7	12	11	12	12	12	12	12	12	9	12	12	12	12	7	11	12	12
		72.0	12	12	12	12	12	12	5	7	12	12	12	5	7	12	11	12	12	12	12	12	12	7	12	12	12	12	7	11	12	12
		92.0	12	9	9	12	12	12	5	7	12	11	12	5	7	12	11	12	12	12	12	12	12	7	11	12	12	12	7	11	12	12
		200.0	12	5	7	12	11	12	5	7	12	11	12	5	7	12	11	12	7	11	12	12	12	7	11	12	12	12	7	11	12	12
	1/4"Φ POWERS RAWL ZAMAC NAIL-IN W/ 1-1/8" MIN. EMBEDMENT (MIN. 3,000 P.S.I. CONCRETE)	48.0	12	12	11	12	12	12	5	6	12	12	10		4	10	7	12	12	12	12	12	12	6	10	12	12	12	3	7	12	9
		62.0	12	11	9	12	12	11	3	5	11	11	9		4	9	5	12	12	12	12	12	12	4	8	12	12	11	3	6	11	6
		72.0	12	7	7	12	12	9		4	9	5	9		4	9	5	12	9	11	12	12	12	3	6	12	7	11	3	6	11	6
		92.0	12	4	6	12	12	9		4	9	5	9		4	9	5	12	5	9	12	12	11	3	6	11	6	11	3	6	11	6
		200.0	9		4	9	5	9		4	9	5	9		4	9	5	11	3	6	11	6	11	3	6	11	6	11	3	6	11	6
	1/4"Φ ITW RED HEAD DYNABOLT SLEEVE ANCHOR W/1-1/8" MIN. EMBED. (MIN. 2,100 P.S.I. CONCRETE)	48.0	12	12	12	12	12	12	7	8	12	12	12	4	6	12	11	12	12	12	12	12	12	9	12	12	12	12	5	9	12	12
		62.0	12	12	11	12	12	12	4	6	12	12	12	3	5	12	7	12	12	12	12	12	12	6	10	12	12	12	4	8	12	9
		72.0	12	10	9	12	12	12	3	5	12	8	12	3	5	12	7	12	12	12	12	12	12	4	9	12	10	12	4	8	12	9
		92.0	12	6	7	12	12	12	3	5	12	7	12	3	5	12	7	12	7	12	12	12	12	4	8	12	9	12	4	8	12	9
		200.0	12	3	5	12	7	12	3	5	12	7	12	3	5	12	7	12	4	8	12	9	12	4	8	12	9	12	4	8	12	9
	1/4"Φ POWERS RAWL DROP-IN & 1/4-20 SIDEWALK BOLT (3/4"Φ HEAD) W/ 1-1/4" MIN. EMBEDMENT (MIN. 2,000 P.S.I. CONCRETE)	48.0	12	12	12	12	12	12	11	10	12	12	12	6	7	12	12	12	12	12	12	12	12	12	12	12	12	12	7	12	12	12
		62.0	12	12	12	12	12	12	7	8	12	12	12	5	6	12	10	12	12	12	12	12	12	8	12	12	12	12	6	11	12	12
		72.0	12	12	12	12	12	12	5	7	12	12	12	5	6	12	10	12	12	12	12	12	12	6	11	12	12	12	6	11	12	12
		92.0	12	8	9	12	12	12	5	6	12	10	12	5	6	12	10	12	11	12	12	12	12	6	11	12	12	12	6	11	12	12
		200.0	12	5	6	12	10	12	5	6	12	10	12	5	6	12	10	12	6	11	12	12	12	6	11	12	12	12	6	11	12	12

ANCHOR NOTES:

1. **SPANS & LOADS SHOWN HERE ARE FOR DETERMINING ANCHOR SPACING ONLY. ALLOWABLE SHUTTER SPANS FOR SPECIFIC LOADS MUST BE LIMITED TO THOSE SHOWN IN TABLE 1, SHEET 6.**
2. ENTER TABLE BASED ON THE EXISTING STRUCTURE MATERIAL, ANCHOR TYPE AND EDGE DISTANCE. SELECT DESIGN LOAD GREATER THAN OR EQUAL TO NEGATIVE DESIGN LOAD ON SHUTTER AND SELECT SPAN GREATER THAN OR EQUAL TO SHUTTER SPAN.
3. EXISTING STRUCTURE MAY BE CONCRETE, HOLLOW BLOCK OR WOOD FRAMING. REFERENCE ANCHOR SCHEDULE FOR PROPER ANCHOR TYPE BASED ON TYPE OF EXISTING STRUCTURE AND APPROPRIATE CONNECTION TYPE. SEE CONNECTION DETAILS FOR IDENTIFICATION OF CONNECTION TYPE.
4. ANCHORS SHALL BE INSTALLED IN ACCORDANCE WITH MANUFACTURERS' RECOMMENDATIONS.
5. MINIMUM EMBEDMENT AND EDGE DISTANCE EXCLUDES WALL FINISH OR STUCCO.
6. WHERE EXISTING STRUCTURE IS WOOD FRAMING, WOOD FRAMING CONDITIONS VARY. FIELD VERIFY THAT FASTENERS ARE INTO ADEQUATE WOOD FRAMING MEMBERS, NOT PLYWOOD.
7. WHERE LAG SCREWS FASTEN TO NARROW FACE OF STUD FRAMING, FASTENER SHALL BE LOCATED IN CENTER OF NOMINAL 2"x4" (MIN.) WOOD STUD. 3/4" EDGE DISTANCE IS ACCEPTABLE FOR WOOD FRAMING. WOOD STUD SHALL BE "SOUTHERN PINE" G=0.55 OR GREATER DENSITY. LAG SCREWS SHALL HAVE PHILLIPS PAN HEAD OR HEX HEAD.
8. MACHINE SCREWS SHALL HAVE MINIMUM OF 1/2" ENGAGEMENT OF THREADS IN BASE ANCHOR AND MAY HAVE EITHER A PAN HEAD, TRUSS HEAD, OR WAFER HEAD (SIDEWALK BOLT), U.O.N.
9. DESIGNATES ANCHOR CONDITIONS WHICH ARE NOT ACCEPTABLE USES.

* DESIGNATES ANCHOR WHICH ARE REMOVABLE BY REMOVING WASHERED WINGNUT, NUT OR MACHINE SCREW.

Approved as complying with the Florida Building Code
Date 04/25/2002
NOA# 02-0312.02
Miami Dade Product Control Division
By Helmy A. Mekkawy

KNEZEVICH & ASSOCIATES, INC.
CONSULTING ENGINEERS • PRODUCT TESTING
1260 N. UNIVERSITY DRIVE, SUITE 180 • FORT LAUDERDALE, FL 33322
TEL: (954) 382-2800 • FAX: (954) 382-2989 • FLORIDA COA #3205
WEBSITE: WWW.KNEZEVICH.COM • E-MAIL: KA@KNEZEVICH.COM

COPYRIGHT © 2001 KNEZEVICH & ASSOCIATES, INC.

20 GAGE GALVANIZED STEEL STORM PANELS

Style View Products, Inc. d b a ALUMA CRAFT PRODUCTS
QUALITY PRODUCTS SINCE 1964
3561 N.W. 54TH STREET TEL: (305) 635-4555
MIAMI, FLORIDA 33142 FAX: (305) 635-4557

V.J. KNEZEVICH
PROFESSIONAL ENGINEER
FL License No: PE 0010983

MAR 07 2001

revisions			
no	date	by	description
0	03/07/01	VJK	PREV. DRAWING NO. 98-102

date 03/07/01
scale AS NOTED
drawn by MC
design by VJK
checked by VJK
drawing no. 01-252
sheet 8 of 9

ANCHOR SCHEDULE

FASTENER SPACING (INCHES) REQUIRED FOR VARIOUS DESIGN LOADS AND SPANS

EXISTING STRUCTURE	ANCHOR TYPE	LOAD (W) P.S.F. MAX. (SEE NOTE 1)	MIN. 2" EDGE DISTANCE															MIN. 3" EDGE DISTANCE														
			SPANS UP TO 5'-0" (SEE NOTE 1)					SPANS UP TO 8'-6" (SEE NOTE 1)					SPANS UP TO 12'-0" (SEE NOTE 1)					SPANS UP TO 5'-0" (SEE NOTE 1)					SPANS UP TO 8'-6" (SEE NOTE 1)					SPANS UP TO 12'-0" (SEE NOTE 1)				
			CONNECTION TYPE					CONNECTION TYPE					CONNECTION TYPE					CONNECTION TYPE					CONNECTION TYPE					CONNECTION TYPE				
			1	2	3	4	5	1	2	3	4	5	1	2	3	4	5	1	2	3	4	5	1	2	3	4	5	1	2	3	4	5
HOLLOW CONCRETE BLOCK	1/4"Φ ITW TAPCON W/ 1-1/4" MIN. EMBEDMENT	48.0	12	12	8	12	12	9	3	4	9	9	6		3	6	5	12	12	12	12	12	12	4	7	12	12	8		5	8	6
		62.0	12	7	6	12	12	7		3	7	7	6		3	6	3	12	9	9	12	12	9		5	9	9	7		4	7	4
		72.0	10	4	5	10	10	6		3	6	3	6		3	6	3	12	6	8	12	12	8		4	8	4	7		4	7	4
		92.0	8		4	8	8	6		3	6	3	6		3	6	3	10	3	6	10	10	7		4	7	4	7		4	7	4
		200.0	6		3	6	3	6		3	6	3	6		3	6	3	7		4	7	4	7		4	7	4	7		4	7	4
	* * 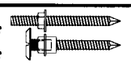 1/4"Φ ELCO MALE/ FEMALE "PANELMATE" W/ 1-1/4 MIN. EMBEDMENT & 1/4-20 MACHINE SCREW WITH NUT	48.0	12	12	12	12	12	12	5	7	12	12	11	3	5	11	8	12	12	12	12	12	12	6	8	12	12	11	3	6	11	8
		62.0	12	12	9	12	12	12	3	5	12	12	10		4	10	5	12	12	11	12	12	12	3	6	12	12	10		5	10	5
		72.0	12	8	8	12	12	10		4	10	6	10		4	10	5	12	8	9	12	12	10		5	10	6	10		5	10	5
		92.0	12	4	6	12	12	10		4	10	5	10		4	10	5	12	4	7	12	12	10		5	10	5	10		5	10	5
		200.0	10		4	10	5	10		4	10	5	10		4	10	5	10		5	10	5	10		5	10	5	10		5	10	5
	* 1/4"Φ POWERS RAWL CALK-IN W/ 7/8" EMBEDMENT & 1/4-20 STAINLESS STEEL MACHINE SCREW	48.0	12	12	10	12	12	12	5	6	12	12	9		4	9	7	12	12	12	12	12	12	6	9	12	12	12	3	6	12	9
		62.0	12	10	8	12	12	10	3	4	10	10	8		4	8	4	12	12	12	12	12	12	3	7	12	12	11		6	11	6
		72.0	12	7	7	12	12	9		4	9	5	8		4	8	4	12	8	11	12	12	11	3	6	11	6	11		6	11	6
		92.0	12	4	5	12	12	8		4	8	4	8		4	8	4	12	5	8	12	12	11		6	11	6	11		6	11	6
		200.0	8		4	8	4	8		4	8	4	8		4	8	4	11		6	11	6	11		6	11	6	11		6	11	6
	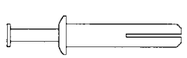 1/4"Φ POWERS RAWL ZAMAC NAIL-IN W/ 1-1/8" MIN. EMBEDMENT	48.0	12	12	8	12	12	9	3	5	9	9	6		3	6	4	12	12	12	12	12	11	4	7	11	11	8		5	8	6
		62.0	12	7	6	12	12	7		3	7	7	5		3	5	3	12	9	9	12	12	8		5	8	8	7		4	7	4
		72.0	10	4	5	10	10	6		3	6	3	5		3	5	3	12	5	8	12	12	7		4	7	4	7		4	7	4
		92.0	8		4	8	8	5		3	5	3	5		3	5	3	10	3	6	10	10	7		4	7	4	7		4	7	4
		200.0	5		3	5	3	5		3	5	3	5		3	5	3	7		4	7	4	7		4	7	4	7		4	7	4
	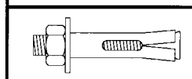 1/4"Φ ITW RED HEAD DYNABOLT SLEEVE ANCHOR W/1-1/8" MIN. EMBED.	48.0	12	12	8	12	12	8	3	5	8	8	6		3	6	4	12	12	12	12	12	10	4	7	10	10	7		5	7	5
		62.0	11	6	6	11	11	6		3	6	6	5		3	5	3	12	8	9	12	12	8		5	8	8	7		4	7	3
		72.0	9	4	5	9	9	5		3	5	3	5		3	5	3	12	5	8	12	12	7		4	7	4	7		4	7	3
		92.0	7		4	7	7	5		3	5	3	5		3	5	3	9	3	6	9	9	7		4	7	3	7		4	7	3
		200.0	5		3	5	3	5		3	5	3	5		3	5	3	7		4	7	3	7		4	7	3	7		4	7	3
	* 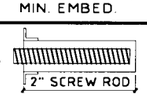 1/4-20 ITW EPCON EPOXY ANCHOR W/ S.S. MACHINE SCREW W/ 2" MIN. EMBED.	48.0	12	12	12	12	12	12	11	12	12	12	12	6	11	12	12	12	12	12	12	12	12	11	12	12	12	12	6	11	12	12
		62.0	12	12	12	12	12	12	6	12	12	12	12	5	10	12	10	12	12	12	12	12	12	6	12	12	12	12	5	10	12	10
		72.0	12	12	12	12	12	12	5	10	12	12	12	5	10	12	10	12	12	12	12	12	12	5	10	12	12	12	5	10	12	10
		92.0	12	8	12	12	12	12	5	10	12	10	12	5	10	12	10	12	8	12	12	12	12	5	10	12	10	12	5	10	12	10
		200.0	12	5	10	12	10	12	5	10	12	10	12	5	10	12	10	12	5	10	12	10	12	5	10	12	10	12	5	10	12	10

ANCHOR NOTES:

1. **SPANS & LOADS SHOWN HERE ARE FOR DETERMINING ANCHOR SPACING ONLY. ALLOWABLE SHUTTER SPANS FOR SPECIFIC LOADS MUST BE LIMITED TO THOSE SHOWN IN TABLE 1, SHEET 6.**
2. ENTER TABLE BASED ON THE EXISTING STRUCTURE MATERIAL, ANCHOR TYPE AND EDGE DISTANCE. SELECT DESIGN LOAD GREATER THAN OR EQUAL TO NEGATIVE DESIGN LOAD ON SHUTTER AND SELECT SPAN GREATER THAN OR EQUAL TO SHUTTER SPAN.
3. EXISTING STRUCTURE MAY BE CONCRETE, HOLLOW BLOCK OR WOOD FRAMING. REFERENCE ANCHOR SCHEDULE FOR PROPER ANCHOR TYPE BASED ON TYPE OF EXISTING STRUCTURE AND APPROPRIATE CONNECTION TYPE. SEE CONNECTION DETAILS FOR IDENTIFICATION OF CONNECTION TYPE.
4. ANCHORS SHALL BE INSTALLED IN ACCORDANCE WITH MANUFACTURERS' RECOMMENDATIONS.
5. MINIMUM EMBEDMENT AND EDGE DISTANCE EXCLUDES WALL FINISH OR STUCCO.
6. WHERE EXISTING STRUCTURE IS WOOD FRAMING, WOOD FRAMING CONDITIONS VARY. FIELD VERIFY THAT FASTENERS ARE INTO ADEQUATE WOOD FRAMING MEMBERS, NOT PLYWOOD.
7. WHERE LAG SCREWS FASTEN TO NARROW FACE OF STUD FRAMING, FASTENER SHALL BE LOCATED IN CENTER OF NOMINAL 2"x4" (MIN.) WOOD STUD. 3/4" EDGE DISTANCE IS ACCEPTABLE FOR WOOD FRAMING. WOOD STUD SHALL BE "SOUTHERN PINE" G=0.55 OR GREATER DENSITY. LAG SCREWS SHALL HAVE PHILLIPS PAN HEAD OR HEX HEAD.
8. MACHINE SCREWS SHALL HAVE MINIMUM OF 1/2" ENGAGEMENT OF THREADS IN BASE ANCHOR AND MAY HAVE EITHER A PAN HEAD, TRUSS HEAD, OR WAFER HEAD (SIDEWALK BOLT), U.O.N.
9. DESIGNATES ANCHOR CONDITIONS WHICH ARE NOT ACCEPTABLE USES.

* DESIGNATES ANCHOR WHICH ARE REMOVABLE BY REMOVING WASHERED WINGNUT, NUT OR MACHINE SCREW.

Approved as complying with the Florida Building Code
Date 04/25/2002
NOA# 02-0312.02
Miami Dade Product Control Division
By [signature]

KNEZEVICH & ASSOCIATES, INC.
CONSULTING ENGINEERS • PRODUCT TESTING
1260 N. UNIVERSITY DRIVE, SUITE 180 • FORT LAUDERDALE, FL 33322
TEL: (954) 382-2800 • FAX: (954) 382-2989 • FLORIDA COA #3205
WEBSITE: WWW.KNEZEVICH.COM • E-MAIL: KA@KNEZEVICH.COM

COPYRIGHT © 2001 KNEZEVICH & ASSOCIATES, INC

20 GAGE GALVANIZED STEEL STORM PANELS
Style Vieu Products, Inc.
d b a
ALUMA CRAFT PRODUCTS
QUALITY PRODUCTS SINCE 1964
3561 N.W. 67TH STREET TEL: (305) 635-4555
MIAMI, FLORIDA 33142 FAX: (305) 635-4557

V.J. KNEZEVICH
PROFESSIONAL ENGINEER
FL License No: PE 0010983
MAR 07 2001

no	date	by	description
0	03/07/01	VJK	PREV. DRAWING NO 98-172

revisions

date 03/07/01
scale AS NOTED
drawn by MC
design by VJK
checked by VJK
drawing no 01-252
sheet 9 of 9