MIAMI-DADE

BUILDING CODE COMPLIANCE OFFICE (BCCO)
PRODUCT CONTROL DIVISION

MIAMI-DADE COUNTY, FLORIDA
METRO-DADE FLAGLER BUILDING
140 WEST FLAGLER STREET, SUITE 1603
MIAMI, FLORIDA 33130-1563
(305) 375-2901 FAX (305) 375-2908

NOTICE OF ACCEPTANCE (NOA)

MetalTech, Inc.
7635 West 2nd Court
Hialeah, FL 33014

SCOPE:

This NOA is being issued under the applicable rules and regulations governing the use of construction materials. The documentation submitted has been reviewed by Miami-Dade County Product Control Division and accepted by the Board of Rules and Appeals (BORA) to be used in Miami Dade County and other areas where allowed by the Authority Having Jurisdiction (AHJ).

This NOA shall not be valid after the expiration date stated below. The Miami-Dade County Product Control Division (In Miami Dade County) and/or the AHJ (in areas other than Miami Dade County) reserve the right to have this product or material tested for quality assurance purposes. If this product or material fails to perform in the accepted manner, the manufacturer will incur the expense of such testing and the AHJ may immediately revoke, modify, or suspend the use of such product or material within their jurisdiction. BORA reserves the right to revoke this acceptance, if it is determined by Miami-Dade County Product Control Division that this product or material fails to meet the requirements of the applicable building code.

This product is approved as described herein, and has been designed to comply with the High Velocity Hurricane Zone of the Florida Building Code.

DESCRIPTION: Maximum Impact Slimline Accordion Shutter

APPROVAL DOCUMENT: Drawing No. 00-807, titled "Slim Line Accordion Shutter", sheets 1 through 6, prepared, signed sealed by V.J. Knezevich, P.E., dated 6/10/99, bearing the Miami-Dade County Product Control Approval stamp with the Notice of Acceptance number and approval date by the Miami-Dade County Product Control Division.

MISSILE IMPACT RATING: Large and Small Missile Impact

LABELING: Each unit shall bear a permanent label with the manufacturer's name or logo, city, state and following statement: "Miami-Dade County Product Control Approved", unless otherwise noted herein.

RENEWAL of this NOA shall be considered after a renewal application has been filed and there has been no change in the applicable building code negatively affecting the performance of this product.

TERMINATION of this NOA will occur after the expiration date or if there has been a revision or change in the materials, use, and/or manufacture of the product or process. Misuse of this NOA as an endorsement of any product, for sales, advertising or any other purposes shall automatically terminate this NOA. Failure to comply with any section of this NOA shall be cause for termination and removal of NOA.

ADVERTISEMENT: The NOA number preceded by the words Miami-Dade County, Florida, and followed by the expiration date may be displayed in advertising literature. If any portion of the NOA is displayed, then it shall be done in its entirety.

INSPECTION: A copy of this entire NOA shall be provided to the user by the manufacturer or its distributors and shall be available for inspection at the job site at the request of the Building Official.

This NOA **revises NOA # 00-0118.10** and, consists of this page 1 as well as approval document mentioned above. The submitted documentation was reviewed by **Raul Rodriguez.**

PRODUCT CONTROL ACCEPTED

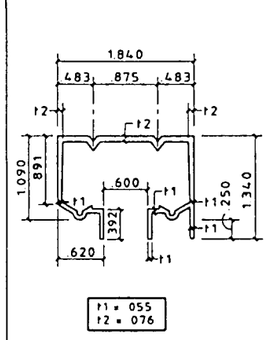

1 HEADER-CLG. MOUNTED

SCALE: HALF SIZE

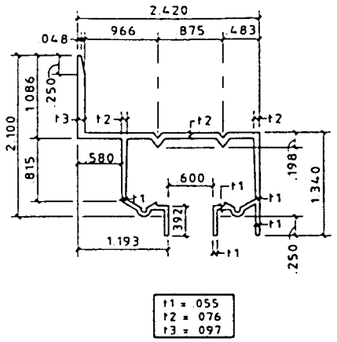

2 HEADER WALL MOUNTED

SCALE: HALF SIZE

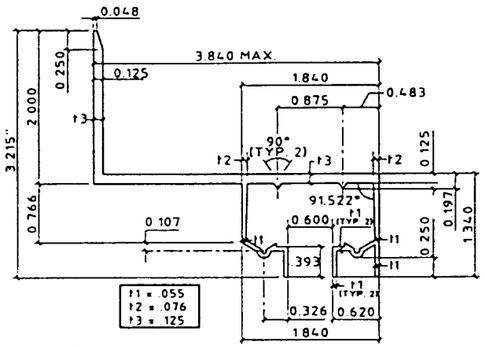

2a BUILD-OUT WALL HEADER

SCALE: HALF SIZE

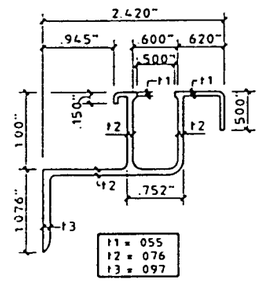

3 SILL-WALL MOUNTED

SCALE: HALF SIZE

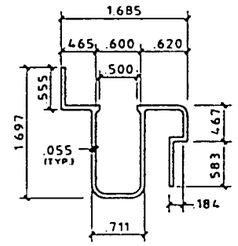

4 ADJ. SILL-TOP

SCALE: HALF SIZE

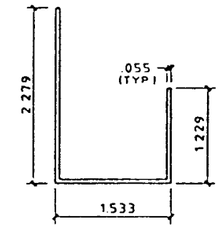

5 ADJ. SILL-BOT.

SCALE: HALF SIZE

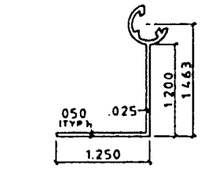

6a 90° END SLAT

SCALE: HALF SIZE

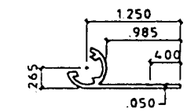

7 FLAT END SLAT

SCALE: HALF SIZE

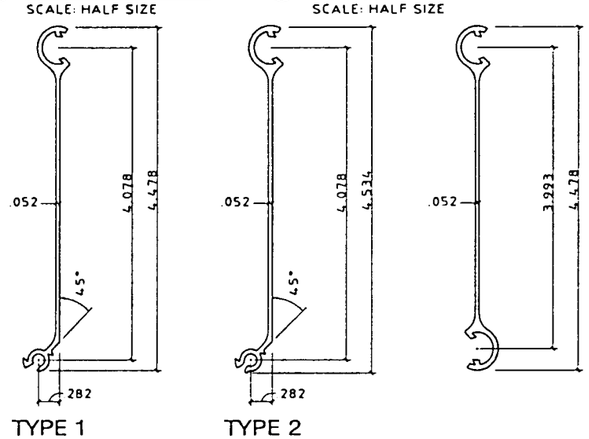

TYPE 1 TYPE 2

EITHER TYPE 1 OR TYPE 2 SLAT IS ACCEPTABLE.
THESE SLATS ARE INTERCHANGEABLE

8 TYP. SLATS

SCALE: HALF SIZE

8a ADAPTER SLAT

SCALE: HALF SIZE

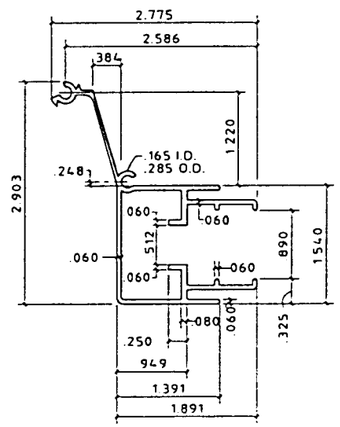

9 CENTER MATE 1

SCALE: HALF SIZE

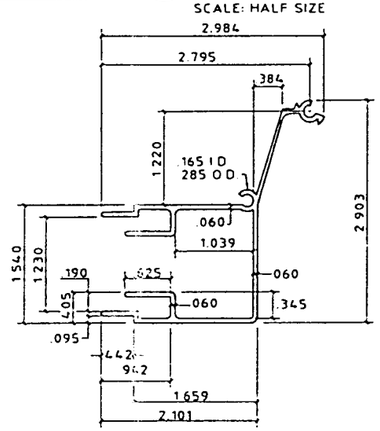

10 CENTER MATE 2

SCALE: HALF SIZE

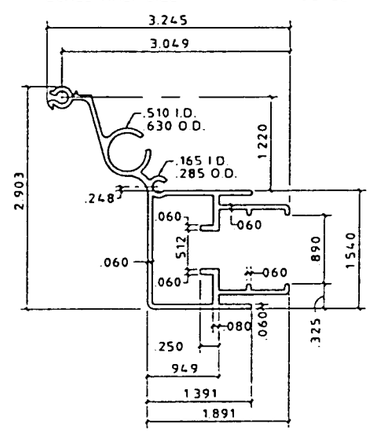

9a CENTER MATE 1 W/ LOCKING ROD

SCALE: HALF SIZE

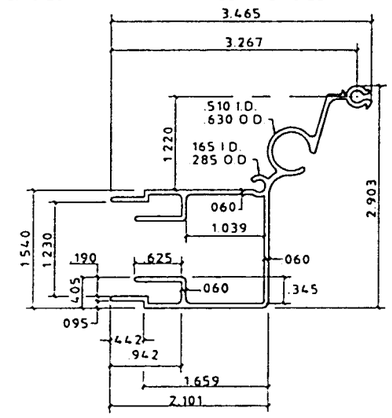

10a CENTER MATE 2 W/ LOCKING ROD

SCALE: HALF SIZE

GENERAL NOTES:

1. THIS ACCORDION SHUTTER SYSTEM IS DESIGNED IN ACCORDANCE WITH THE SOUTH FLORIDA BUILDING CODE, 1994 EDITION.
2. POSITIVE AND NEGATIVE DESIGN PRESSURE CALCULATIONS SHALL BE PERFORMED FOR SPECIFIC JOBS IN ACCORDANCE WITH ASCE 7-88 "MINIMUM DESIGN LOADS FOR BUILDINGS AND OTHER STRUCTURES". TABLES SHALL BE REFERENCED AT APPROPRIATE DESIGN LOADS.
3. ALUMINUM EXTRUSIONS SHALL BE 6063-T6 ALUMINUM ALLOY, U.O.N.
4. EACH SHUTTER ASSEMBLY SHALL BE PERMANENTLY LABELED AT THE BOTTOM END OF THE LOCKING CENTERMATE AS FOLLOWS:

   METALTECH, INC.
   HIALEAH, FLORIDA
   MIAMI-DADE COUNTY PRODUCT
   CONTROL APPROVED
5. ALL BOLTS AND WASHERS SHALL BE 2024-T4 ALUMINUM ALLOY, STAINLESS STEEL, OR GALVANIZED STEEL WITH A MIN. Fy = 33 KSI. POP RIVETS SHALL BE 3/16"Φ 5052 ALUM. ALLOY
6. ALL SHUTTERS SHALL HAVE A LOCKING MECHANISM AT CENTER OR SIDE CLOSURE WITHIN 18" OF CENTER (VERT.). LOCKING MECHANISM SHALL BE LOCKED TO PROVIDE HURRICANE PROTECTION.
7. THE DETAILS AND SPECIFICATIONS SHOWN HEREIN REPRESENT THE PRODUCTS TESTED FOR IMPACT, CYCLIC AND UNIFORM STATIC AIR PRESSURE IN CONFORMANCE W/ MIAMI-DADE COUNTY PROTOCOLS PA 201, 202, AND 203.
8. DESIGN IS BASED ON CONSTRUCTION TESTING CORPORATION (CTC) TEST REPORT No. 96-024 AND 96-037.
9. TOP DETAILS MAY ALSO BE USED AS SILLS.
10. FLOOR TRACKS MAY BE REMOVABLE AT NON-STACKING LOCATIONS. USE REMOVABLE ANCHORS SUCH AS CALK-IN ANCHORS.
11. THE PERMIT HOLDER SHALL VERIFY THE ADEQUACY OF THE EXISTING STRUCTURE TO SUSTAIN THE NEW SUPERIMPOSED LOADS AND TO VERIFY ALL DIMENSIONS AT THE JOB SITE BEFORE COMMENCING WITH THE WORK.
12. ANCHORS SHALL BE INSTALLED IN ACCORDANCE WITH MANUFACTURER'S RECOMMENDATIONS. EMBEDMENT LENGTHS SHALL BE AS NOTED AND DO NOT INCLUDE STUCCO OR OTHER FINISHES.

11 ANGLE

SCALE: HALF SIZE

13 INSERT

SCALE: HALF SIZE

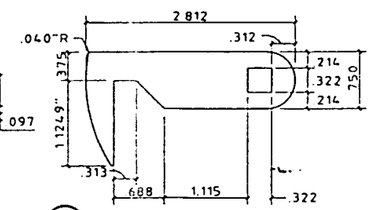

14 LOCKING ARM

SCALE: HALF SIZE
1/8" THICK STAINLESS STEEL

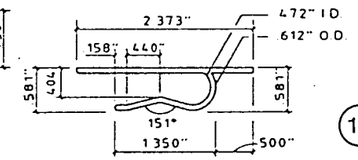

15 LOCKING CLIP

SCALE: HALF SIZE

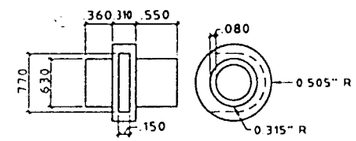

17 LOCKING ARM ALIGNMENT BUSHING (NYLON)

SCALE: HALF SIZE

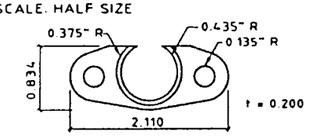

18 INSIDE HANDLE SHIM (NYLON)

SCALE: HALF SIZE

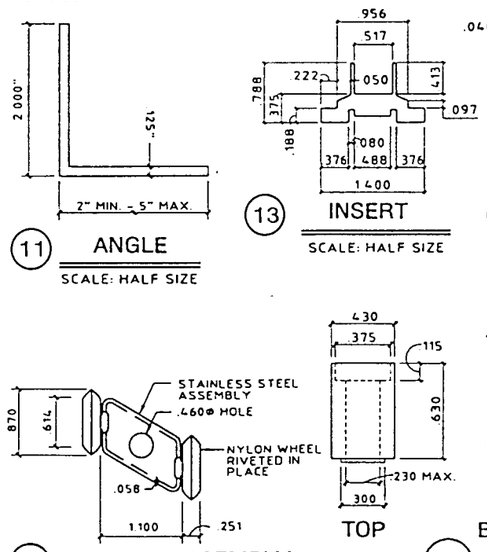

12 ROLLER ASSEMBLY

SCALE: HALF SIZE

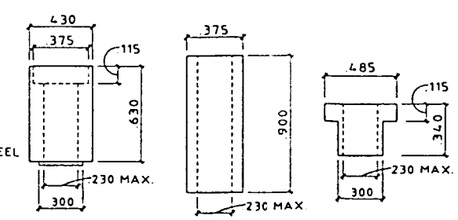

12a BUSHINGS

SCALE: FULL SIZE

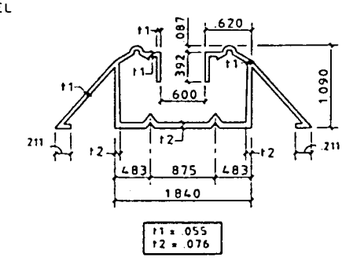

16 WALKOVER SILL FLOOR MOUNTED

SCALE: HALF SIZE

APPROVED AS COMPLYING WITH THE SOUTH FLORIDA BUILDING CODE
DATE January 26, 2000
BY Helmy H. Shaker
PRODUCT CONTROL DIVISION
BUILDING CODE COMPLIANCE OFFICE
ACCEPTANCE NO. 00-0118.10

PRODUCT REVISED as complying with the Florida Building Code
Acceptance No. 00-0312.04
Expiration Date January 11, 2003
By Miami Dade Product Control Division

KNEZEVICH & ASSOCIATES, INC.
CONSULTING ENGINEERS • PRODUCT TESTING
1260 N. UNIVERSITY DRIVE, SUITE 180 • FORT LAUDERDALE, FL 33322
TEL: (954) 382-2600 • FAX: (954) 382-2989
WEBSITE: WWW.KNEZEVICH.COM • E-MAIL: KA@KNEZEVICH.COM

COPYRIGHT © 2000 KNEZEVICH & ASSOCIATES, INC.

HT100 LICENSED BY HI-TECH SHUTTER GROUP, INC.

SLIM LINE ACCORDION SHUTTER

METALTECH, INC.
7635 W. SECOND CT. HIALEAH, FL 33014
7635 WEST 2nd COURT
HIALEAH, FL 33014
(305) 823-2323
EST. 1987

revisions

no.	date	by	description
1	08/08/94		NEW TEST DATA ADDED
2	10/10/96		COUNTY COMMENTS
3	11/26/97	JWK	REVISE FASTENERS
4	01/14/98	JWK	FASTENER NOTES
5	04/30/98	JWK	SLAT 2 REV 2.4 DESC
6	06/10/99	JWK	CENTER MATES/FASTENERS

HTSG I.D. #01120096168D

V.J. KNEZEVICH
PROFESSIONAL ENGINEER
FL License No: PE 0010983
JAN 12 2000

date 07/23/96	
scale AS NOTED	drawn by MC
design by VJK	checked by VJK

drawing no. 00-807

sheet 1 of 6

00-0118

01/12/00 09:22

TABLE 1

MAXIMUM ALLOWABLE SPAN SCHEDULE

NEG. DESIGN LOAD (PSF)	TYPE A ALL MOUNTING CONDITIONS EXCEPT Ⓒ Ⓔ Ⓕ (FT - IN)	TYPE B DETAIL Ⓕ OR DETAIL Ⓒ W/ SINGLE ANGLE REQUIRED 3-3/4" MAX. B.O. (FT - IN)	TYPE C DETAIL Ⓒ DOUBLE ANGLE REQUIRED 3-3/4" MAX. B.O. (FT - IN)	TYPE D DETAIL Ⓔ 9-3/16" MAX. B.O. (FT - IN)
30.0	13 - 1	12 - 4	13 - 1	12 - 7
38.0	13 - 1	11 - 0	13 - 1	11 - 2
40.0	12 - 11	10 - 8	12 - 5	10 - 11
48.0	12 - 4	9 - 9	10 - 4	10 - 0
52.0	12 - 1	9 - 4	9 - 7	9 - 7
56.0	11 - 11	9 - 0	9 - 0	9 - 3
61.5	11 - 7	8 - 7	8 - 7	8 - 10
63.3	11 - 6	8 - 6	8 - 6	8 - 8
66.8	10 - 11	8 - 3	8 - 3	8 - 5
67.5	10 - 9	8 - 3	8 - 3	8 - 5
71.2	10 - 3	8 - 0	8 - 0	8 - 2
75.0	9 - 8	7 - 8	7 - 8	8 - 0
81.4	8 - 11	7 - 0	7 - 0	7 - 4
86.8	8 - 5	6 - 7	6 - 7	6 - 10
91.4	8 - 0	6 - 3	6 - 3	6 - 6
100.0	7 - 3	5 - 9	5 - 9	6 - 0
110.0	6 - 7	5 - 2	5 - 2	5 - 5
120.0	6 - 1	4 - 9	4 - 9	5 - 0
130.0	5 - 7	4 - 5	4 - 5	4 - 7
140.0	5 - 2	4 - 1	4 - 1	4 - 3
150.0	4 - 10	3 - 10	3 - 10	4 - 0
160.0	4 - 6	3 - 7	3 - 7	3 - 9
170.0	4 - 3	3 - 4	3 - 4	3 - 6
180.0	4 - 0	3 - 2	3 - 2	3 - 4
190.0	3 - 10	3 - 0	3 - 0	3 - 1
200.0	3 - 7	2 - 10	2 - 10	3 - 0
210.0	3 - 5	2 - 8	2 - 8	2 - 10

NOTES:

1. REFERENCE APPROPRIATE COLUMN IN TABLE 1 BASED ON MOUNTING CONDITION IN FIELD.
2. FOR DESIGN LOADS BETWEEN TABULATED VALUES, USE NEXT HIGHER LOAD OR LINEAR INTERPOLATION MAY BE USED TO DETERMINE ALLOWABLE SPANS.
3. ENTER TABLE 1 WITH NEGATIVE DESIGN LOAD TO DETERMINE MAX. SHUTTER SPAN.
4. ENTER TABLE 2 WITH POSITIVE DESIGN LOAD TO DETERMINE MIN. SHUTTER SEPARATION FROM GLASS.

TABLE 2

MINIMUM SHUTTER SEPARATION FROM GLASS (IN)

POSITIVE DESIGN LOAD (W) (PSF)	ACTUAL SPAN (FT - IN)	MIN SEPARATION FROM GLASS FOR INSTALLATIONS LESS THAN 30' ABOVE GRADE (INCHES)	MIN. SEPARATION FROM GLASS FOR INSTALLATIONS GREATER THAN 30' ABOVE GRADE (INCHES)
30.0	5 - 0	2-7/8	1-1/2
	7 - 0	2-7/8	1-5/8
	8 - 0	2-7/8	1-5/8
	11 - 0	3	2-1/8
	13 - 1	3-3/4	2-3/4
40.0	5 - 0	2-7/8	1-1/2
	7 - 0	2-7/8	1-5/8
	8 - 0	2-7/8	1-5/8
	11 - 0	3	2-1/4
	12 - 11	3-3/4	3
50.0	5 - 0	2-7/8	1-1/2
	7 - 0	2-7/8	1-5/8
	8 - 0	2-7/8	1-3/4
	11 - 0	3	2-1/2
	12 - 2	3-3/4	3
60.0	5 - 0	2-7/8	1-1/2
	7 - 0	2-7/8	1-5/8
	8 - 0	2-7/8	1-3/4
	11 - 0	3	1-3/4
	11 - 8	3-3/4	3
70.0	5 - 0	2-7/8	1-1/2
	7 - 0	2-7/8	1-5/8
	8 - 0	2-7/8	1-7/8
	9 - 6	3	2-1/4
	10 - 4	3	2-5/8
80.0	5 - 0	2-7/8	1-1/2
	7 - 0	2-7/8	1-3/4
	8 - 0	2-7/8	1-7/8
	11 - 0	3-1/8	3-1/8
	12 - 1	4	4
90.0	5 - 0	2-7/8	1-1/2
	7 - 0	2-7/8	1-3/4
	8 - 0	2-7/8	2
	11 - 0	3-3/8	3-3/8
	11 - 6	3-7/8	4
100.0	5 - 0	2-7/8	1-1/2
	7 - 0	2-7/8	1-3/4
	8 - 0	2-7/8	2
	9 - 0	3	2-3/4
	10 - 3	3	3

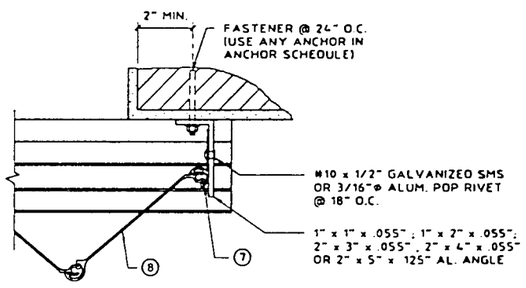

Ⓛ ALT. CLOSURE DETAIL

SCALE: 3" = 1'-0"

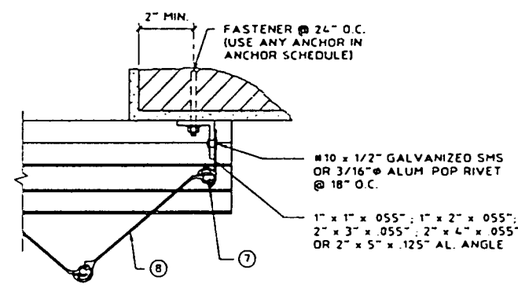

Ⓜ ALT. CLOSURE DETAIL

SCALE: 3" = 1'-0"

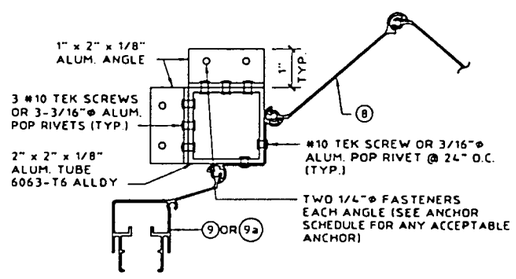

NOTE:
EITHER CONDITION MAY BE TYPICAL FOR EITHER SIDE

Ⓝ CORNER CLOSURE DETAIL

SCALE: 3" = 1'-0"

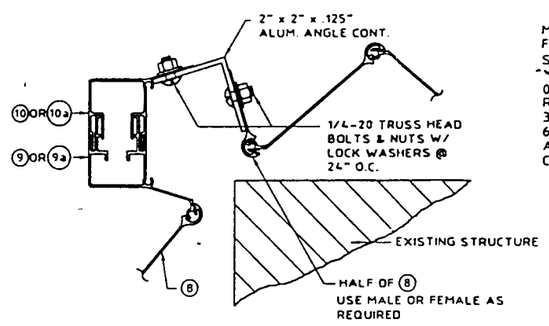

Ⓟ ALT. CORNER CLOSURE DETAIL

SCALE: 3" = 1'-0"

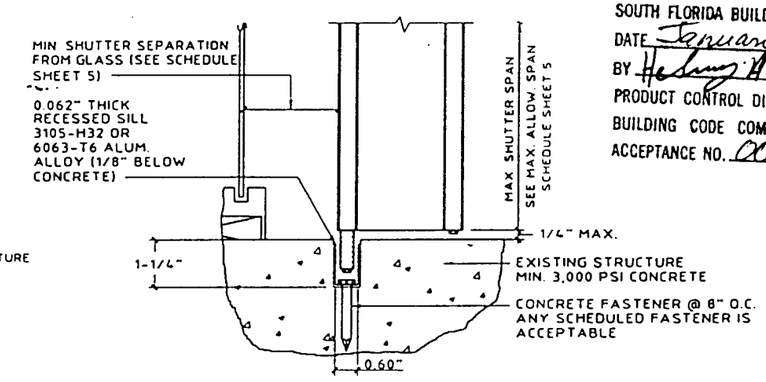

Q ALTERNATE FLOOR MOUNT DETAIL

SCALE : 3"= 1'- 0"

PRODUCT REVISED
as complying with the Florida Buiding Code
Acceptance No. 02-0312.04
Expiration Date January 27, 2003
By _____
Miami Dade Product Control Division

APPROVED AS COMPLYING WITH THE SOUTH FLORIDA BUILDING CODE
DATE January 26, 2000
BY _____
PRODUCT CONTROL DIVISION
BUILDING CODE COMPLIANCE OFFICE
ACCEPTANCE NO. 00-0118.10

KNEZEVICH & ASSOCIATES, INC.
CONSULTING ENGINEERS • PRODUCT TESTING
1280 N. UNIVERSITY DRIVE, SUITE 180 • FORT LAUDERDALE, FL 33322
TEL: (954) 382-2800 • FAX: (954) 382-2889
WEBSITE: WWW.KNEZEVICH.COM • E-MAIL: KA@KNEZEVICH.COM

COPYRIGHT © 2000 KNEZEVICH & ASSOCIATES, INC.

HTI100 LICENSED BY HI-TECH SHUTTER GROUP, INC.

SLIM LINE ACCORDION SHUTTER

METALTECH, INC.
7635 WEST 2nd COURT
HIALEAH, FL 33014
(305) 823-2323
EST. 1957

revisions

no	date	by	description
1	08/08/96		NEW TEST DATA ADDED
2	10/30/96		COUNTY COMMENTS
3	11/26/97	JWK	REVISE FASTENERS
4	05/14/98	JWK	FASTENER NOTES
5	01/30/99	JWK	SLAT 2/REV 2,4 DESC
6	06/10/99	JWK	CENTER MATES/FASTENERS

HTSG I.D. #01120098168D

V.J. KNEZEVICH
PROFESSIONAL ENGINEER
FL License No: PE 0010983

JAN 12 2000

date 07/23/96	
scale AS NOTED	drawn by MC
design by VJK	checked by VJK

drawing no. 00-807

sheet 5 of 6

01/12/00 09:31

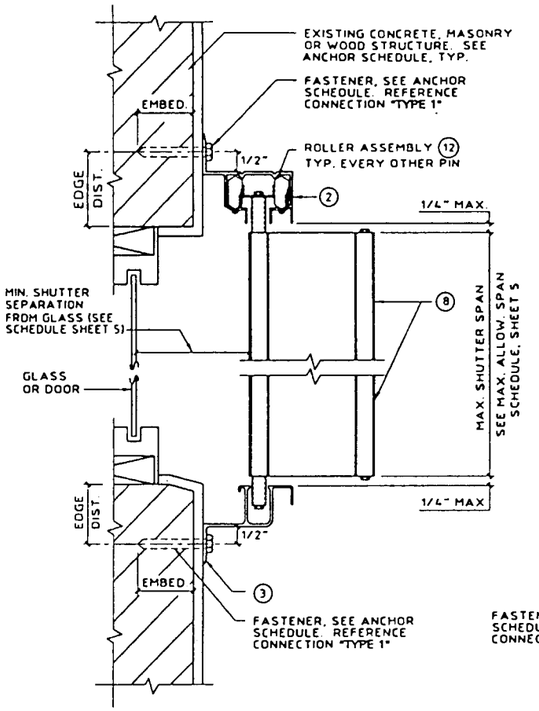

(A) WALL MOUNT SECTION

SCALE : 3"= 1'- 0"

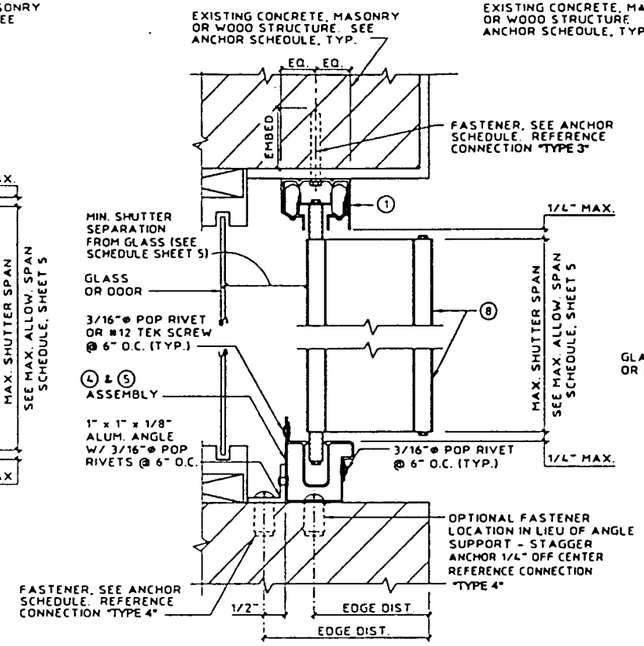

(B) CEILING/INSIDE MOUNT SECTION

SCALE : 3"= 1'- 0"

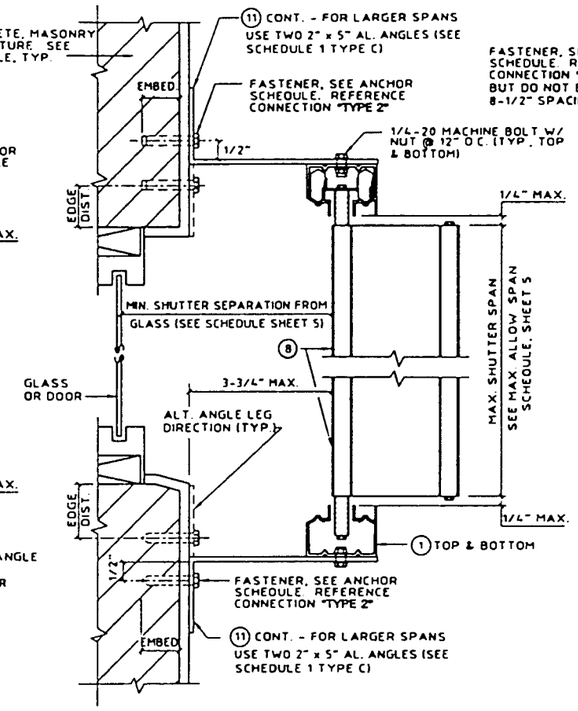

(C) BUILD-OUT MOUNT SECTION

SCALE : 3"= 1'- 0"

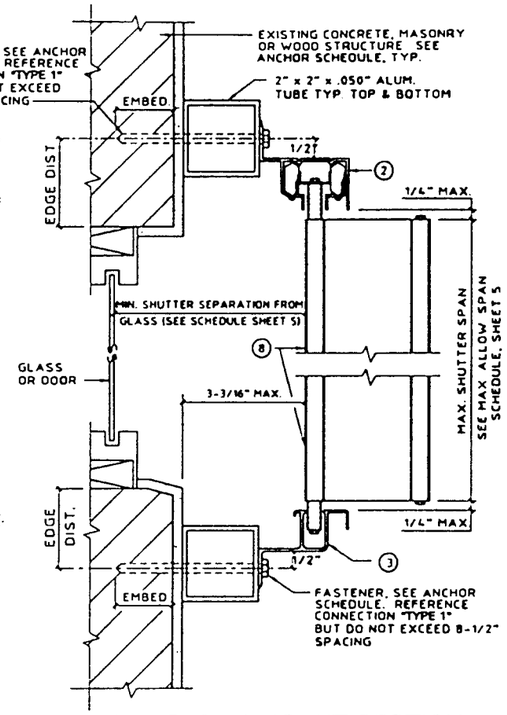

(D) BUILD-OUT MOUNT SECTION

SCALE : 3" = 1'-0"

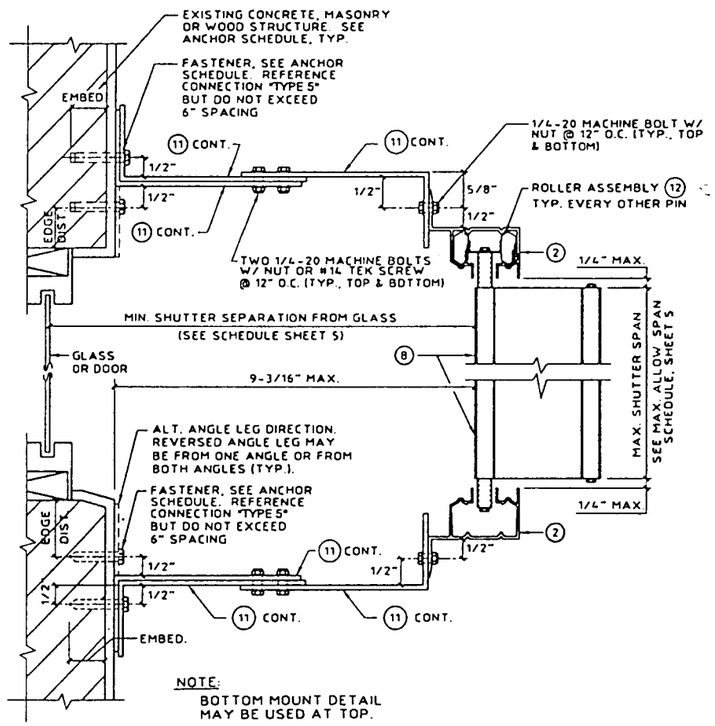

(E) BUILD-OUT MOUNT SECTION

SCALE : 3"= 1'- 0"

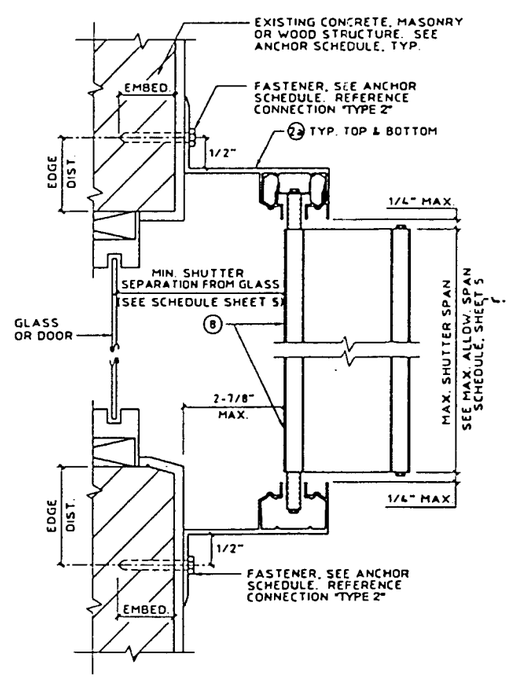

(F) BUILD-OUT MOUNT SECTION

SCALE : 3"= 1'- 0"

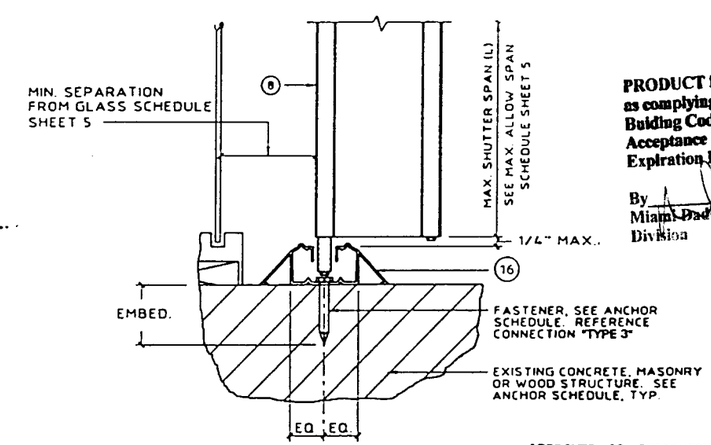

(G) FLOOR MOUNT SECTION

SCALE : 3"= 1'- 0"

PRODUCT REVISED
as complying with the Florida Building Code
Acceptance No. 02-0312.04
Expiration Date January 27, 2003
By
Miami-Dade Product Control Division

APPROVED AS COMPLYING WITH THE SOUTH FLORIDA BUILDING CODE
DATE January 26, 2000
BY
PRODUCT CONTROL DIVISION
BUILDING CODE COMPLIANCE OFFICE
ACCEPTANCE NO. 00-0118.10

KNEZEVICH & ASSOCIATES, INC.
CONSULTING ENGINEERS • PRODUCT TESTING
1280 N. UNIVERSITY DRIVE, SUITE 180 • FORT LAUDERDALE, FL 33322
TEL: (954) 382-2800 • FAX: (954) 382-2899
WEBSITE: WWW.KNEZEVICH.COM • E-MAIL: KA@KNEZEVICH.COM

COPYRIGHT © 2000 KNEZEVICH & ASSOCIATES, INC.

HT1100 LICENSED BY HI-TECH SHUTTER GROUP, INC.

SLIM LINE ACCORDION SHUTTER

METALTECH, INC.
7635 WEST 2nd COURT
HIALEAH, FL. 33014
(305) 823-2323
EST. 1957

revisions

no	date	by	description
1	08/08/96		NEW TEST DATA ADDED
2	10/30/96		COUNTY COMMENTS
3	11/26/97	JWK	REVISE FASTENERS
4	03/16/98	JWK	FASTENER NOTES
5	04/30/98	JWK	SLAT 2/REV.2.4 DESC.
6	06/10/99	JWK	CENTER NATES/FASTENERS

HTSG I.D. #011200961680

V.J. KNEZEVICH
PROFESSIONAL ENGINEER
FL License No: PE 0010983

JAN 12 2000

date 07/23/96	
scale AS NOTED	drawn by MC
design by VJK	checked by VJK
drawing no. 00-807	
sheet 3 of 6	

01/12/00 09:30

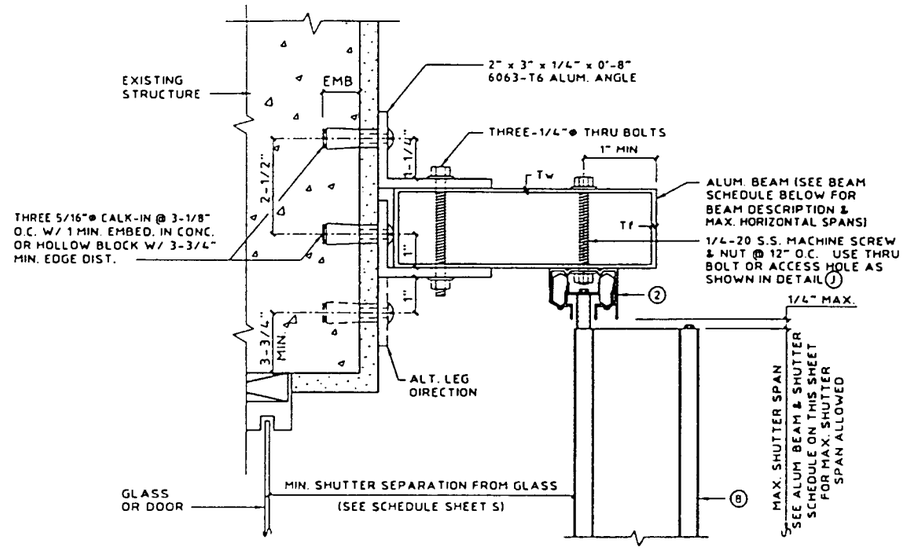

(MAX. DESIGN LOAD ± 72 PSF)

(H) TOP SUPPORT BEAM DETAIL

SCALE : 3"= 1'- 0"

ALUM. BEAM & SHUTTER SCHEDULE		
DESCRIPTION	SHUTTER SPAN	BEAM SPAN
2" x 5" Tw = .125" Tf = .125"	5'-0"	9'-5"
	8'-0"	8'-1"
	10'-0"	7'-6"
2" x 8" Tw = .072" Tf = .224"	5'-0"	14'-0"
	8'-0"	12'-0"
	10'-0"	11'-1"
2" x 9" Tw = .072" Tf = .224"	5'-0"	15'-5"
	8'-0"	13'-2"
	10'-0"	12'-3"

NOTE: 1. USE BEAM SCHEDULE FOR DETAILS (H) AND (J).
2. SHUTTER SPAN TO BE LIMITED TO THOSE SHOWN IN TABLE, SHEET 5.
3. BEAM SPAN SHALL BE CONSIDERED AS THE DISTANCE FROM ℄ OF SUPPORT TO ℄ OF SUPPORT.

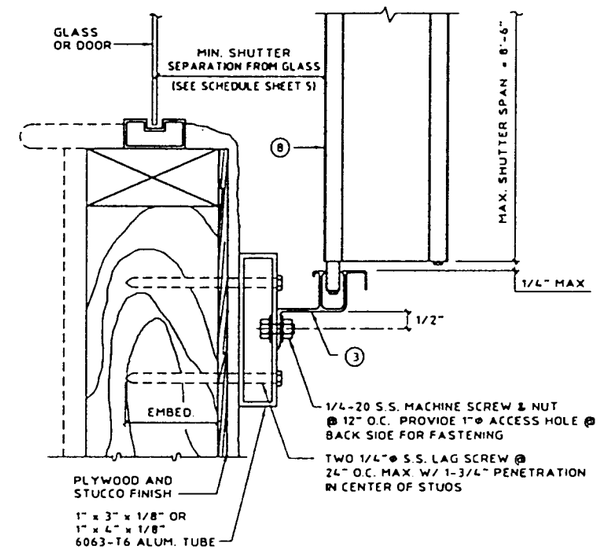

PRODUCT REVISED
as complying with the Florida Building Code
Acceptance No. 02-0312.04
Expiration Date January 27, 2003
By
Miami Dade Product Control Division

(MAX. DESIGN LOAD = ± 72 P.S.F.)

(I) WALL MOUNT SECTION - USING ALUM. TUBE

SCALE : 3"= 1'- 0"

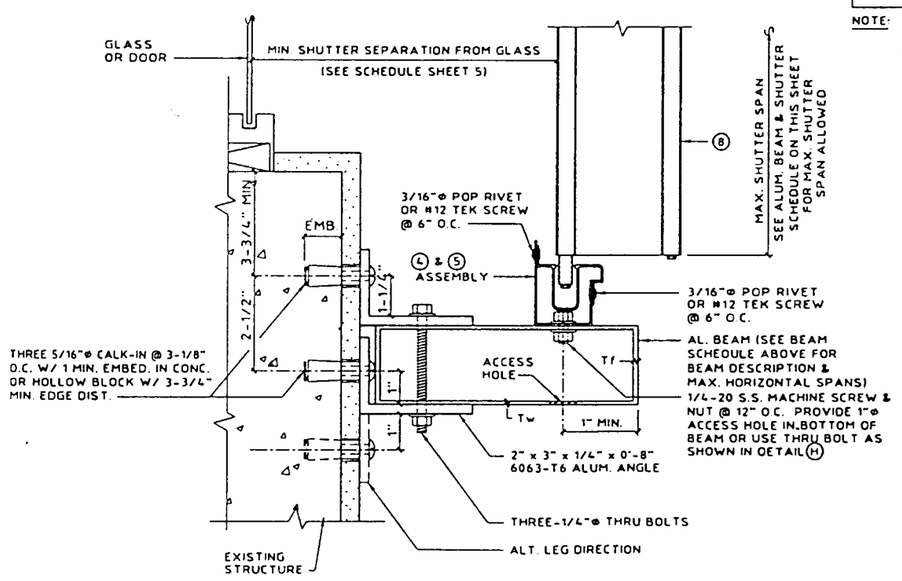

(MAX. DESIGN LOAD ± 72 PSF)

(J) BOTTOM SUPPORT BEAM DETAIL

SCALE : 3"= 1'- 0"

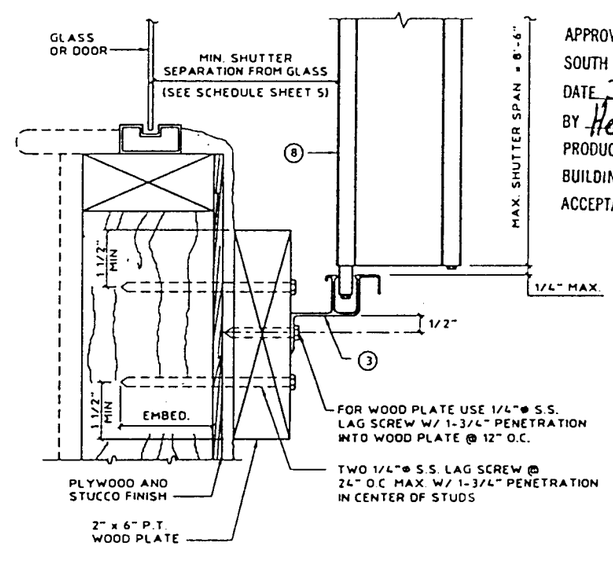

APPROVED AS COMPLYING WITH THE SOUTH FLORIDA BUILDING CODE
DATE January 26, 2000
BY Henry A. Mahar
PRODUCT CONTROL DIVISION
BUILDING CODE COMPLIANCE OFFICE
ACCEPTANCE NO. 00-0118.10

(MAX. DESIGN LOAD = ± 72 P.S.F.)

(K) WALL MOUNT SECTION - USING 2" x 6" WOOD PLATE

SCALE : 3"= 1'- 0"

KNEZEVICH & ASSOCIATES, INC.
CONSULTING ENGINEERS • PRODUCT TESTING
1260 N. UNIVERSITY DRIVE, SUITE 160 • FORT LAUDERDALE, FL 33322
TEL: (954) 382-2600 • FAX: (954) 382-2699
WEBSITE: WWW.KNEZEVICH.COM • E-MAIL: KA@KNEZEVICH.COM

COPYRIGHT © 2000 KNEZEVICH & ASSOCIATES, INC.

HT100 LICENSED BY HI-TECH SHUTTER GROUP, INC.

SLIM LINE ACCORDION SHUTTER

METALTECH, INC.
7835 W. SECOND CT. HIALEAH, FL. 33014
7835 WEST 2nd COURT
HIALEAH, FL. 33014
(305) 823-2323
EST. 1957

revisions

no.	date	by	description
1	08/08/94		NEW TEST DATA ADDED
2	10/10/96		COUNTY COMMENTS
3	11/26/97	JWK	REVISE FASTENERS
4	01/14/98	JWK	FASTENER NOTES
5	01/30/98	JWK	SLAT 2/REV 2,4 DESC
6	06/10/99	JWK	CENTER MATES/FASTENERS

HTSG I.D. #011200961680

V.J. KNEZEVICH
PROFESSIONAL ENGINEER
FL License No: PE 0010983

JAN 12 2000

date 07/23/96	
scale AS NOTED	drawn by MC
design by VJK	checked by VJK

drawing no. 00-807

sheet 4 of 6

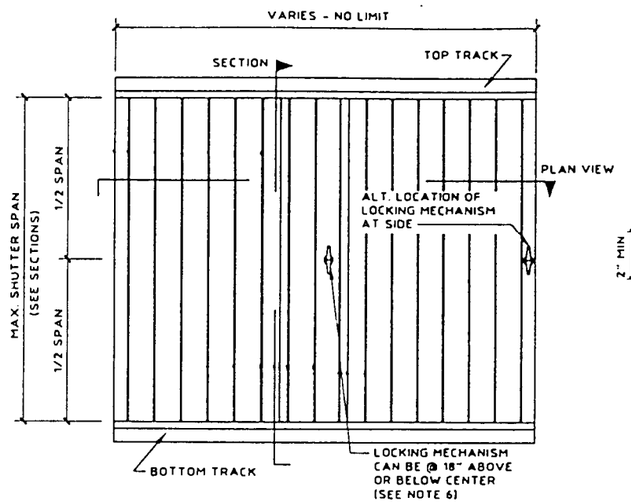

TYPICAL ELEVATION

N.T.S.

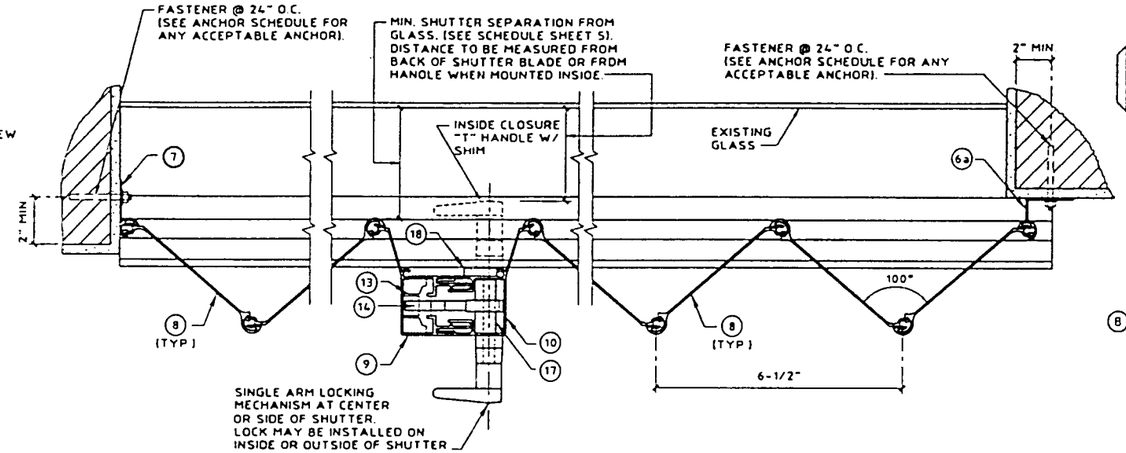

TYPICAL PLAN VIEW

SCALE: 3" = 1'-0"

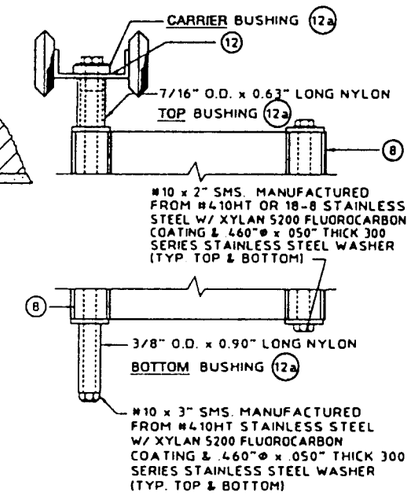

SCREW BUSHING & ROLLER/ BUSHING ASSEMBLY

SCALE: HALF SIZE

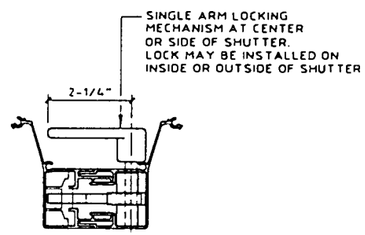

SINGLE ARM LOCK

OPTIONAL CLOSER HANDLE

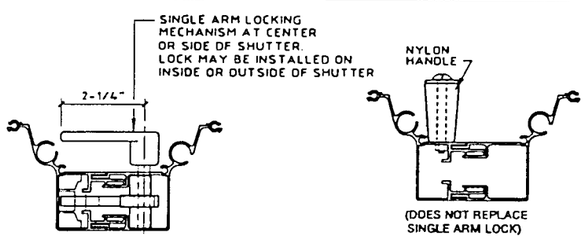

SINGLE ARM LOCK

OPTIONAL CLOSER HANDLE

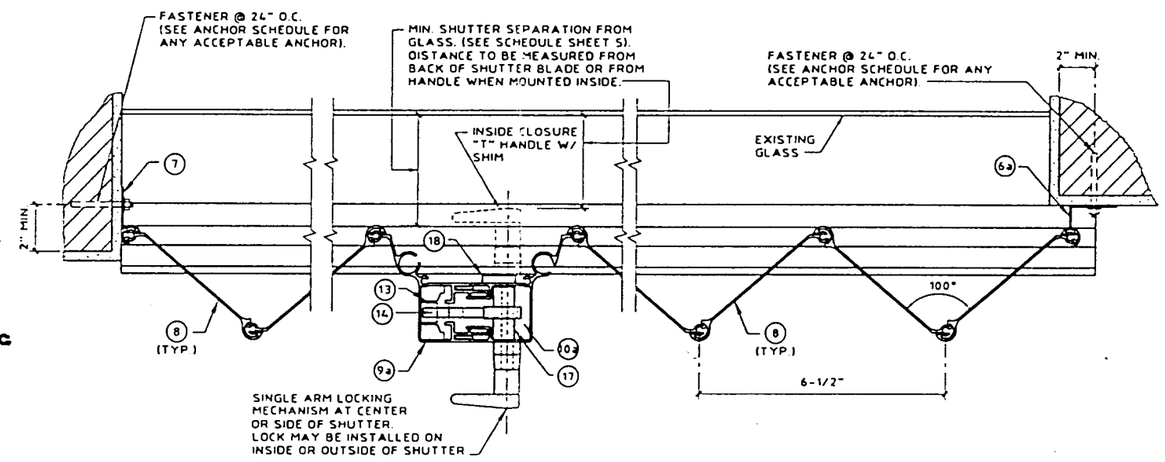

OPTIONAL PLAN VIEW

SCALE: 3" = 1'-0"

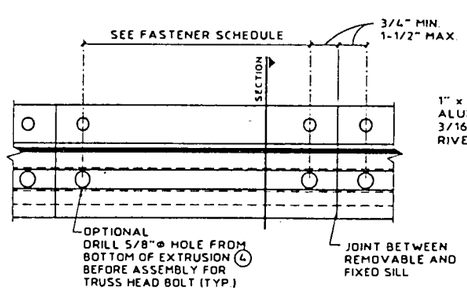

PLAN VIEW

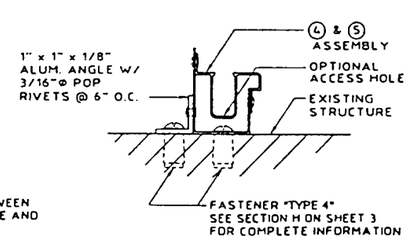

SECTION

REMOVABLE FLOOR TRACK DETAIL

SCALE : 3"= 1'- 0"

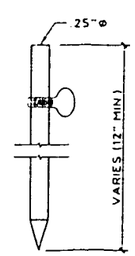

USED WITH PIECES (9a) AND (10a)

LOCKING PIN

SCALE: 3" = 1'-0"

PRODUCT REVISED
as complying with the Florida Building Code
Acceptance No 02-0312.04
Expiration Date January 27, 2003
By
Miami Dade Product Control Division

APPROVED AS COMPLYING WITH THE SOUTH FLORIDA BUILDING CODE
DATE January 26, 2000
BY
PRODUCT CONTROL DIVISION
BUILDING CODE COMPLIANCE OFFICE
ACCEPTANCE NO. 00-0118.10

KNEZEVICH & ASSOCIATES, INC.
CONSULTING ENGINEERS • PRODUCT TESTING
1280 N. UNIVERSITY DRIVE, SUITE 180 • FORT LAUDERDALE, FL 33322
TEL: (954) 382-2800 • FAX: (954) 382-2969
WEBSITE: WWW.KNEZEVICH.COM • E-MAIL: KA@KNEZEVICH.COM

COPYRIGHT © 2000 KNEZEVICH & ASSOCIATES, INC.

HT-100 LICENSED BY HI-TECH SHUTTER GROUP, INC.

SLIM LINE ACCORDION SHUTTER

METALIECH, INC.
7635 W. SECOND CT. HIALEAH, FL 33014
7635 WEST 2nd COURT
HIALEAH, FL 33014
(305) 823-2323
EST. 1987

revisions

no	date	by	description
1	08/08/96		NEW TEST DATA ADDED
2	10/20/96		COUNTY COMMENTS
3	11/26/97	JVK	REVISE FASTENERS
4	01/26/98	JVK	FASTENER NOTES
5	06/30/98	JVK	SLAT 2/REV 2, DESC
6	08/10/99	JVK	CENTER MATES/FASTENERS

HTSG I.D. #01120096168D

V.J. KNEZEVICH
PROFESSIONAL ENGINEER
FL License No: PE 0070983

JAN 12 2000

date 07/23/96	
scale AS NOTED	drawn by MC
design by VJK	checked by VJK

drawing no. 00-807

sheet 2 of 6

01/12/00 09:29

ANCHOR SCHEDULE

FASTENER MAXIMUM SPACING (INCHES) REQUIRED FOR VARIOUS DESIGN LOADS AND SPANS

MIN. 2" EDGE DISTANCE

EXISTING STRUCTURE	ANCHOR TYPE	LOAD (W) PSF MAX. (SEE NOTE 1)	SPANS UP TO 5'-8" (SEE NOTE 1) CONNECTION TYPE					SPANS UP TO 8'-0" (SEE NOTE 1) CONNECTION TYPE					SPANS UP TO 9'-0" (SEE NOTE 1) CONNECTION TYPE					SPANS UP TO 13'-1" (SEE NOTE 1) CONNECTION TYPE				
			1	2	3	4	5	1	2	3	4	5	1	2	3	4	5	1	2	3	4	5
CONCRETE	1/4"ø ITW TAPCON W/ 1-1/4" MIN. EMBEDMENT (MIN. 3,100 P.S.I. CONCRETE)	48.0	12	12	12	7	9	12	12	10	5	7	12	12	9	4	6	6	12	6	3	4
		62.0	12	12	11	5	7	12	12	8	3	5	9	12	7	3	4	4	11	5		3
		72.0	12	12	10	4	6	8	12	7	3	4	5	12	6	3	4	4	11	5		3
		92.0	11	12	7	3	5	4	11	5		3	4	11	5		3	4	11	5		3
		210.0	4	11	5		3	4	11	5		3	4	11	5		3	4	11	5		3
	* 1/4"ø ELCO MALE/FEMALE "PANELMATE" W/ 1-1/4 MIN. EMBEDMENT & 1/4-20 MACHINE SCREW WITH NUT (MIN. 3,000 P.S.I. CONCRETE)	48.0	12	12	11	5	7	12	12	8	3	5	12	12	7	3	5	5	10	4		3
		62.0	12	12	8	4	6	11	12	6	3	4	7	11	5		3	3	8	4		
		72.0	12	12	7	3	5	6	11	5		3	4	9	4		3	3	8	4		
		92.0	9	12	5		4	3	8	4			3	8	4			3	8	4		
		210.0	3	8	4			3	8	4			3	8	4			3	8	4		
	* 1/4"ø POWERS CALK-IN W/ 7/8" EMBEDMENT & 1/4-20 STAINLESS STEEL MACHINE SCREW (MIN. 3,000 P.S.I. CONCRETE)	48.0	12	12	12	9	12	12	12	11	6	11	12	12	10	6	10	10	12	7	4	7
		62.0	12	12	12	7	12	12	12	9	5	9	12	12	8	4	8	7	12	6	3	6
		72.0	12	12	11	6	11	12	12	7	4	7	9	12	7	4	6	7	12	6	3	6
		92.0	12	12	8	5	8	7	12	6	3	6	7	12	6	3	6	7	12	6	3	6
		210.0	7	12	6	3	6	7	12	6	3	6	7	12	6	3	6	7	12	6	3	6
	1/4"ø POWERS ZAMAC NAIL-IN W/ 1-1/8" MIN. EMBEDMENT (MIN. 3,000 P.S.I. CONCRETE)	48.0	12	12	12	5	8	12	12	9	4	5	12	12	8	3	5	5	10	5		3
		62.0	12	12	10	4	6	12	12	7	3	4	7	11	6		3	3	9	4		3
		72.0	12	12	8	3	5	6	11	6		3	4	10	5		3	3	9	4		3
		92.0	9	12	6	3	4	3	9	4		3	3	9	4		3	3	9	4		3
		210.0	3	9	4		3	3	9	4		3	3	9	4		3	3	9	4		3
HOLLOW CONCRETE BLOCK	1/4"ø ITW TAPCON W/ 1-1/4" MIN. EMBEDMENT	48.0	12	12	9	4	5	11	11	6		3	10	10	5		3	3	6	3		
		62.0	12	12	6	3	4	8	8	4			4	7	4				5	3		
		72.0	10	10	6		3	4	7	4			3	6	3				5	3		
		92.0	6	8	4				5	3				5	3				5	3		
		210.0		5	3				5	3				5	3				5	3		
	* 1/4"ø ELCO MALE/FEMALE "PANELMATE" W/ 1-1/4 MIN. EMBEDMENT & 1/4-20 MACHINE SCREW WITH NUT	48.0	12	12	11	5	7	12	12	8	3	5	12	12	7	3	5	5	10	4		3
		62.0	12	12	8	4	6	11	12	6	3	4	7	11	5		3	3	8	4		
		72.0	12	12	7	3	5	6	11	5		3	4	9	4		3	3	8	4		
		92.0	9	12	5		4	3	8	4			3	8	4			3	8	4		
		210.0	3	8	4			3	8	4			3	8	4			3	8	4		
	* 1/4"ø POWERS CALK-IN W/ 7/8" EMBEDMENT & 1/4-20 STAINLESS STEEL MACHINE SCREW	48.0	12	12	9	4	6	12	12	6	3	4	12	12	6	3	4	4	8	4		3
		62.0	12	12	7	3	5	10	11	5		3	6	10	4		3	3	7	3		
		72.0	12	12	6	3	4	5	9	4		3	4	8	4			3	7	3		
		92.0	8	10	5		3	3	7	3			3	7	3			3	7	3		
		210.0	3	7	3			3	7	3			3	7	3			3	7	3		
	1/4"ø POWERS ZAMAC NAIL-IN W/ 1-1/8" MIN. EMBEDMENT	48.0	12	12	9	4	5	10	10	6		3	9	9	6		3	3	6	4		
		62.0	11	11	7	3	4	7	8	5			4	7	4				5	3		
		72.0	10	10	6		3	4	7	4				6	4				5	3		
		92.0	6	8	4				5	3				5	3				5	3		
		210.0		5	3				5	3				5	3				5	3		

MIN. 3" EDGE DISTANCE

EXISTING STRUCTURE	ANCHOR TYPE	LOAD (W) PSF MAX. (SEE NOTE 1)	SPANS UP TO 5'-8" (SEE NOTE 1) CONNECTION TYPE					SPANS UP TO 8'-0" (SEE NOTE 1) CONNECTION TYPE					SPANS UP TO 9'-0" (SEE NOTE 1) CONNECTION TYPE					SPANS UP TO 13'-1" (SEE NOTE 1) CONNECTION TYPE				
			1	2	3	4	5	1	2	3	4	5	1	2	3	4	5	1	2	3	4	5
CONCRETE	1/4"ø ITW TAPCON W/ 1-1/4" MIN. EMBEDMENT (MIN. 3,100 P.S.I. CONCRETE)	48.0	12	12	12	8	11	12	12	12	5	7	12	12	11	5	7	7	12	8	3	4
		62.0	12	12	12	6	8	12	12	10	4	6	10	12	9	4	5	4	12	7	3	4
		72.0	12	12	12	5	7	9	12	8	3	5	6	12	7	3	4	4	12	7	3	4
		92.0	12	12	9	4	5	4	12	7	3	4	4	12	7	3	4	4	12	7	3	4
		210.0	4	12	7	3	4	4	12	7	3	4	4	12	7	3	4	4	12	7	3	4
	* 1/4"ø ELCO MALE/FEMALE "PANELMATE" W/ 1-1/4 MIN. EMBEDMENT & 1/4-20 MACHINE SCREW WITH NUT (MIN. 3,000 P.S.I. CONCRETE)	48.0	12	12	12	6	8	12	12	9	4	5	12	12	8	3	5	5	10	5		3
		62.0	12	12	10	4	6	12	12	7	3	4	7	11	6		4	3	9	4		3
		72.0	12	12	8	4	5	6	11	6		3	4	10	5		3	3	9	4		3
		92.0	9	12	6	3	4	3	9	4		3	3	9	4		3	3	9	4		3
		210.0	3	9	4		3	3	9	4		3	3	9	4		3	3	9	4		3
	* 1/4"ø POWERS CALK-IN W/ 7/8" EMBEDMENT & 1/4-20 STAINLESS STEEL MACHINE SCREW (MIN. 3,000 P.S.I. CONCRETE)	48.0	12	12	12	12	12	12	12	12	9	12	12	12	12	8	12	12	12	11	6	8
		62.0	12	12	12	10	12	12	12	12	7	11	12	12	12	6	10	9	12	10	5	7
		72.0	12	12	12	9	12	12	12	12	6	9	12	12	11	5	8	9	12	10	5	7
		92.0	12	12	12	7	10	9	12	10	5	7	9	12	10	5	7	9	12	10	5	7
		210.0	9	12	10	5	7	9	12	10	5	7	9	12	10	5	7	9	12	10	5	7
	1/4"ø POWERS ZAMAC NAIL-IN W/ 1-1/8" MIN. EMBEDMENT (MIN. 3,000 P.S.I. CONCRETE)	48.0	12	12	12	7	9	12	12	11	4	6	12	12	10	4	5	5	11	6	3	3
		62.0	12	12	12	5	7	12	12	8	3	5	8	12	7	3	4	3	10	5		3
		72.0	12	12	10	4	6	7	12	7	3	4	5	11	6		3	3	10	5		3
		92.0	10	12	8	3	4	3	10	5		3	3	10	5		3	3	10	5		3
		210.0	3	10	5		3	3	10	5		3	3	10	5		3	3	10	5		3
HOLLOW CONCRETE BLOCK	1/4"ø ITW TAPCON W/ 1-1/4" MIN. EMBEDMENT	48.0	12	12	11	4	6	12	12	7	3	4	11	11	6		3	3	7	4		
		62.0	12	12	8	3	4	9	9	6		3	5	8	5				6	4		
		72.0	12	12	7	3	4	4	8	5			3	7	4				6	4		
		92.0	7	9	5		3		6	4				6	4				6	4		
		210.0		6	4				6	4				6	4				6	4		
	* 1/4"ø ELCO MALE/FEMALE "PANELMATE" W/ 1-1/4 MIN. EMBEDMENT & 1/4-20 MACHINE SCREW WITH NUT	48.0	12	12	12	6	8	12	12	9	4	5	12	12	8	3	5	5	10	5		3
		62.0	12	12	10	4	6	12	12	7	3	4	7	11	6		4	3	9	4		3
		72.0	12	12	8	4	5	6	11	6		3	4	10	5		3	3	9	4		3
		92.0	9	12	6	3	4	3	9	4		3	3	9	4		3	3	9	4		3
		210.0	3	9	4		3	3	9	4		3	3	9	4		3	3	9	4		3
	* 1/4"ø POWERS CALK-IN W/ 7/8" EMBEDMENT & 1/4-20 STAINLESS STEEL MACHINE SCREW	48.0	12	12	12	6	8	12	12	10	4	6	12	12	9	4	5	5	11	6		3
		62.0	12	12	11	5	6	12	12	8	3	4	7	12	7	3	4	3	9	5		3
		72.0	12	12	10	4	5	7	12	7	3	4	5	10	6		3	3	9	5		3
		92.0	10	12	7	3	4	3	9	5		3	3	9	5		3	3	9	5		3
		210.0	3	9	5		3	3	9	5		3	3	9	5		3	3	9	5		3
	1/4"ø POWERS ZAMAC NAIL-IN W/ 1-1/8" MIN. EMBEDMENT	48.0	12	12	11	4	5	12	12	8	3	4	10	10	7		3	3	7	4		
		62.0	12	12	8	3	4	8	9	6		3	5	8	5				6	4		
		72.0	11	11	7	3	3	4	8	5			3	7	4				6	4		
		92.0	6	9	6		3		6	4				6	4				6	4		
		210.0		6	4				6	4				6	4				6	4		

ANCHOR SCHEDULE

FASTENER MAXIMUM SPACING (INCHES) REQUIRED FOR VARIOUS DESIGN LOADS AND SPANS

MIN. 3/4" EDGE DISTANCE

EXISTING STRUCTURE	ANCHOR TYPE	LOAD (W) PSF MAX. (SEE NOTE 1)	SPANS UP TO 5'-8" (SEE NOTE 1) CONNECTION TYPE					SPANS UP TO 8'-0" (SEE NOTE 1) CONNECTION TYPE					SPANS UP TO 9'-0" (SEE NOTE 1) CONNECTION TYPE					SPANS UP TO 13'-1" (SEE NOTE 1) CONNECTION TYPE				
			1	2	3	4	5	1	2	3	4	5	1	2	3	4	5	1	2	3	4	5
WOOD	1/4"ø WOOD LAG W/ 1-3/4" MIN. THREAD PENETRATION SHEAR PARALLEL OR PERP. TO WOOD GRAIN	48.0	12	12	11	7	12	12	12	8	5	11	12	12	7	4	10	10	12	4	3	7
		62.0	12	12	8	5	12	12	12	6	4	8	12	12	5	3	7	7	12	4		6
		72.0	12	12	7	5	10	12	12	5	3	7	9	12	4	3	6	7	12	4		6
		92.0	12	12	5	3	8	7	12	4		6	7	12	4		6	7	12	4		6
		210.0	7	12	4		6	7	12	4		6	7	12	4		6	7	12	4		6

ANCHOR NOTES:

1. SPANS AND LOADS SHOWN HERE ARE FOR DETERMINING ANCHOR SPACING ONLY. ALLOWABLE STORM SHUTTER SPANS FOR SPECIFIC LOADS MUST BE LIMITED TO THOSE SHOWN IN TABLE 1, SHEET 5.
2. ENTER ANCHOR SCHEDULE BASED ON THE EXISTING STRUCTURE MATERIAL, ANCHOR TYPE AND EDGE DISTANCE. SELECT DESIGN LOAD GREATER THAN OR EQUAL TO NEGATIVE DESIGN LOAD ON SHUTTER AND SELECT SPAN GREATER THAN OR EQUAL TO SHUTTER SPAN.
3. EXISTING STRUCTURE MAY BE CONCRETE, HOLLOW BLOCK OR WOOD FRAMING. REFERENCE ANCHOR SCHEDULE FOR PROPER ANCHOR TYPE BASED ON TYPE OF EXISTING STRUCTURE AND APPROPRIATE CONNECTION TYPE. SEE MOUNTING SECTION DETAILS FOR IDENTIFICATION OF CONNECTION TYPE.
4. ANCHORS SHALL BE INSTALLED IN ACCORDANCE WITH MANUFACTURERS' RECOMMENDATIONS.
5. MINIMUM EMBEDMENT AND EDGE DISTANCE EXCLUDES WALL FINISH OR STUCCO.
6. WHERE EXISTING STRUCTURE IS WOOD FRAMING, WOOD FRAMING CONDITIONS VARY. FIELD VERIFY THAT FASTENERS ARE INTO ADEQUATE WOOD FRAMING MEMBERS, NOT PLYWOOD. FASTENING TO PLYWOOD IS ACCEPTABLE ONLY FOR SIDE CLOSURE PIECES.
7. WHERE LAG SCREWS FASTEN TO NARROW FACE OF STUD FRAMING, FASTENER SHALL BE LOCATED IN CENTER OF NOMINAL 2" x 4" (MIN.) WOOD STUD. 3/4" EDGE DISTANCE IS ACCEPTABLE FOR WOOD FRAMING. WOOD STUD SHALL BE "SOUTHERN PINE" G=0.55 OR GREATER DENSITY. LAG SCREWS SHALL HAVE PHILLIPS PAN HEAD OR HEX HEAD.
8. MACHINE SCREWS SHALL HAVE MINIMUM OF 1/2" ENGAGEMENT OF THREADS IN BASE ANCHOR AND MAY HAVE EITHER A PAN HEAD, TRUSS HEAD, OR WAFER HEAD (SIDEWALK BOLT), U.O.N.
9. [hatched box] DESIGNATES ANCHOR CONDITIONS WHICH ARE NOT ACCEPTABLE USES.
10. * DESIGNATES ANCHORS WHICH ARE REMOVABLE BY REMOVING MACHINE SCREW, NUT OR WASHERED WINGNUT.
11. FOR BUILD-OUT MOUNT SECTION (D) ANCHOR SPACING SHALL NOT EXCEED 8-1/2" O.C.
12. FOR BUILD-OUT MOUNT SECTION (E) ANCHOR SPACING SHALL NOT EXCEED 6" O.C.

PRODUCT REVISED as complying with the Florida Buiding Code Acceptance No 02-0212.04 Expiration Date January 27, 2003 By Miami Dade Product Control Division

APPROVED AS COMPLYING WITH THE SOUTH FLORIDA BUILDING CODE DATE January 26, 2000 BY [signature] PRODUCT CONTROL DIVISION BUILDING CODE COMPLIANCE OFFICE ACCEPTANCE NO. 00-0118.10

KNEZEVICH & ASSOCIATES, INC.
CONSULTING ENGINEERS • PRODUCT TESTING
1280 N. UNIVERSITY DRIVE, SUITE 180 • FORT LAUDERDALE, FL 33322
TEL: (954) 382-2800 • FAX: (954) 382-2988
WEBSITE: WWW.KNEZEVICH.COM • E-MAIL: KA@KNEZEVICH.COM

COPYRIGHT © 2000 KNEZEVICH & ASSOCIATES, INC.
HT100 LICENSED BY HI-TECH SHUTTER GROUP, INC.

SLIM LINE ACCORDION SHUTTER

METALTECH, INC. 7635 W. SECOND CT. HIALEAH, FL 33014
7635 WEST 2nd COURT HIALEAH, FL 33014 (305) 823-2323
EST. 1987

revisions			
no	date	by	description
1	08/08/96		NEW TEST DATA ADDED
2	10/10/96		COUNTY COMMENTS
3	11/26/97	JWK	REVISE FASTENERS
4	01/14/98	JWK	FASTENER NOTES
5	04/30/98	JWK	SLAT 2/REV 2,4 DESC.
6	06/10/99	VJK	CENTER MATES/FASTENERS

HTSG I.D. #01120096168D

V.J. KNEZEVICH PROFESSIONAL ENGINEER PL License No: PE 0010983

JAN 12 2000

date 07/23/96
scale AS NOTED
drawn by MC
design by VJK
checked by VJK
drawing no. 00-807
sheet 6 of 6