MIAMI-DADE

BUILDING CODE COMPLIANCE OFFICE (BCCO)
PRODUCT CONTROL DIVISION

MIAMI-DADE COUNTY, FLORIDA
METRO-DADE FLAGLER BUILDING
140 WEST FLAGLER STREET, SUITE 1603
MIAMI, FLORIDA 33130-1563
(305) 375-2901 FAX (305) 375-2908

NOTICE OF ACCEPTANCE (NOA)

Besam Automated Entrance Systems, Inc.
84 Twin Rivers Drive
Hightstown, NJ 08520-5213

SCOPE:
This NOA is being issued under the applicable rules and regulations governing the use of construction materials. The documentation submitted has been reviewed by Miami-Dade County Product Control Division and accepted by the Board of Rules and Appeals (BORA) to be used in Miami Dade County and other areas where allowed by the Authority Having Jurisdiction (AHJ).

This NOA shall not be valid after the expiration date stated below. The Miami-Dade County Product Control Division (In Miami Dade County) and/or the AHJ (in areas other than Miami Dade County) reserve the right to have this product or material tested for quality assurance purposes. If this product or material fails to perform in the accepted manner, the manufacturer will incur the expense of such testing and the AHJ may immediately revoke, modify, or suspend the use of such product or material within their jurisdiction. BORA reserves the right to revoke this acceptance, if it is determined by Miami-Dade County Product Control Division that this product or material fails to meet the requirements of the applicable building code.

This product is approved as described herein, and has been designed to comply with the High Velocity Hurricane Zone of the Florida Building Code.

DESCRIPTION: Series "Power-Glide AMD-2 Windbreaker LT" Aluminum Automatic Bi-Parting Sliding Door System with Fixed Sidelite or with Full Breakout Sidelite

APPROVAL DOCUMENT: Drawing No. **WBLT19711** for Doors with Fixed Sidelite, Sheets 1 through 6 of 6, Drawing No. **WBLT29711** for Doors with Full Breakout Sidelite, Sheets 1 through 6 of 6, both prepared by manufacturer, dated 3/04/02 with rev. B on 3/02, bearing the Miami-Dade County Product Control Revision stamp with the Notice of Acceptance number and expiration date by the Miami-Dade County Product Control Division.

MISSILE IMPACT RATING: None

LABELING: Each unit shall bear a permanent label with the manufacturer's name or logo, city, state and following statement: "Miami-Dade County Product Control Approved", unless otherwise noted herein.

RENEWAL of this NOA shall be considered after a renewal application has been filed and there has been no change in the applicable building code negatively affecting the performance of this product.

TERMINATION of this NOA will occur after the expiration date or if there has been a revision or change in the materials, use, and/or manufacture of the product or process. Misuse of this NOA as an endorsement of any product, for sales, advertising or any other purposes shall automatically terminate this NOA. Failure to comply with any section of this NOA shall be cause for termination and removal of NOA.

ADVERTISEMENT: The NOA number preceded by the words Miami-Dade County, Florida, and followed by the expiration date may be displayed in advertising literature. If any portion of the NOA is displayed, then it shall be done in its entirety.

INSPECTION: A copy of this entire NOA shall be provided to the user by the manufacturer or its distributors and shall be available for inspection at the job site at the request of the Building Official.
This NOA **revises NOA # 01-0221.04** and, consists of this page 1 as well as approval document mentioned above.
The submitted documentation was reviewed by **Manuel Perez, P.E.**

PRODUCT CONTROL ACCEPTED

Besam Automated Entrance Systems, Inc.

NOTICE OF ACCEPTANCE: EVIDENCE SUBMITTED

(For File ONLY. Not part of NOA)

A. DRAWINGS

1. Manufacturer's die drawings and sections.
2. Drawing No. **WBLT19711** for Doors with Fixed Sidelite, Sheets 1 through 6 of 6, Drawing No. **WBLT29711** for Doors with Full Breakout Sidelite, Sheets 1 through 6 of 6, both prepared by manufacturer, dated 3/04/02 with rev. B on 3/02.

B. TESTS

(Tested under approval # 97-0903.08)

1. Test reports on 1) Air Infiltration Test, per SFBC, PA 202-94
   2) Uniform Static Air Pressure Test, Loading per SFBC, PA 20294
   3) Forced Entry Test, per SFBC 3603.2 (b) and PA 202-94

   along with installation diagram of an aluminum automatic sliding glass doors system, of O-SX-SX-O and SO-SX-SX-SO configurations, prepared by American Test Lab of South Florida, Test Report No. **ATL-0623.01-97**, dated 7/11/97, revised on 5/11/98, signed and sealed by William R. Mehner, P.E.

C. CALCULATIONS

(Submitted under approval # 97-0903.08)

1. Anchor Calculations, prepared by Robt. E. Fisher – Wm. M. Meyers, P.E. Consulting Engineers, dated 8/15/97, 02/16/98 and 04/24/98, signed and sealed by William M. Meyers, P.E.

D. MATERIAL CERTIFICATIONS

1. None.

E. STATEMENTS

1. None.

F. OTHER

1. Notice of Acceptance No. **01-0221.04**, issued to Besam Automated Entrance Systems, Inc. for their Series "Power-Glide AMD-2 Windbreaker LT" Aluminum Automatic Bi-Parting Sliding Door System with Fixed Sidelite or with Full Breakout Sidelite, approved on 5/10/01 and expiring on 6/11/06.

Manuel Perez, P.E.
Product Control Examiner
NOA No 02-0313.06
Expiration Date: June 11, 2006
Approval Date: October 31, 2002

besam®
AUTOMATIC DOOR SYSTEMS
81 TWIN RIVERS DRIVE
HIGHTSTOWN, NJ 08520-5212
TELEPHONE: 609-443-5800.
TELEFAX: 609-443-3440.

POWER-GLIDE AMD-2

WINDBREAKER LT. DOOR SYSTEM
FIXED SIDELITE BI-PARTING SLIDING DOOR.

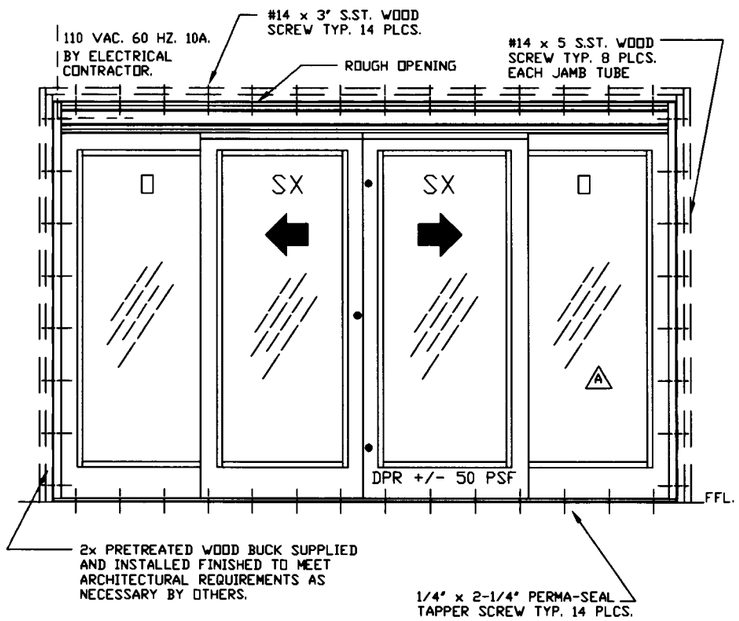

EXTERIOR ELEVATION (N.T.S.)

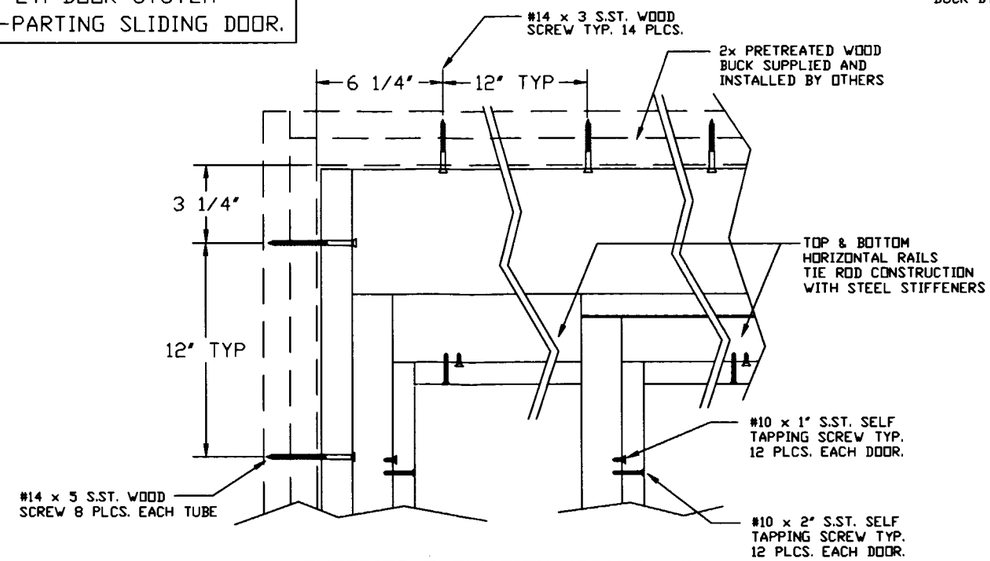

EXTERIOR ELEVATION (SCALE 1:4)

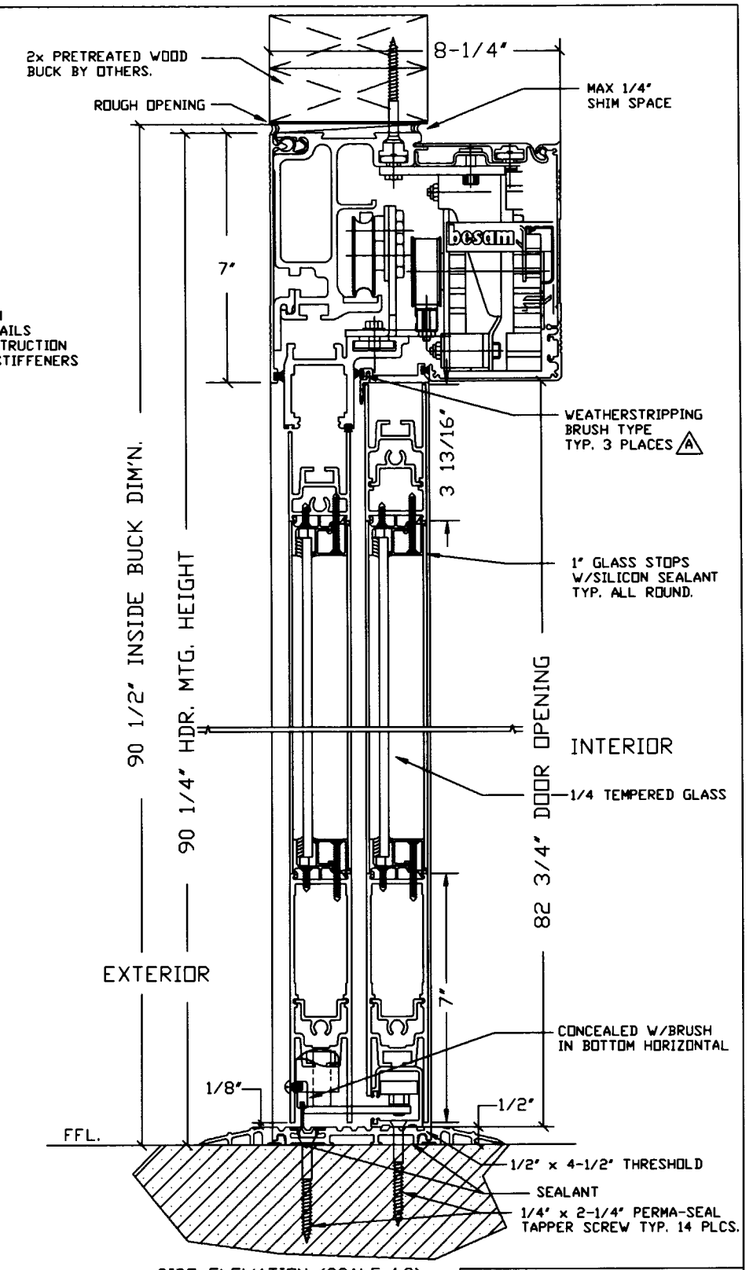

SIDE ELEVATION (SCALE 1:2)

B

NOTE: REFERENCE ORIGINAL NOPA #97-0903.08 E.1.B & E.1.C
SCREWS & METHOD OF ATTATCHMENT

SILL: SINGLE ROW OF FOURTEEN (14) #14x3" FH SS WS, WITH 1-1/2" MIN. PENETRATION INTO 2x WOOD BUCK, STAGGERED THRU SILL TRACK & GUIDE SLIDE TRACK
OR SINGLE ROW OF FOURTEEN (14) 1/4"x2-1/4" RAWL PERMA-SEAL TAPPER, WITH A 1-1/2" MIN. PENETRATION INTO MASONRY, STAGGERED THRU SILL TRACK,
OR SINGLE ROW OF FOURTEEN (14) 1/4"-20 SS SELF TAPPING SCREWS OR CARBON STEEL TEK SCREWS, INTO A 12 GA. MIN STEEL STUDS, STAGGERED THRU SILL TRACK & GUIDE SLIDE TRACK, ALL LOCATED AT 6-1/4" FROM EACH CORNER WITH REMAINING SPACED AT 12" O.C. MAX.

HEAD: SINGLE ROW OF FOURTEEN (14) #14x3" FH SS WS, WITH 1-1/2" MIN. PENETRATION INTO 2x WOOD BUCK, THRU HEADER TUBE AND STEEL STIFFENER
OR SINGLE ROW OF FOURTEEN (14) 1/4"x3" RAWL PERMA-SEAL TAPPER, WITH A 1-1/2" MIN. PENETRATION INTO MASONRY, THRU HEADER TUBE AND STEEL STIFFENER
OR SINGLE ROW OF FOURTEEN (14) 1/4"-20 SS SELF TAPPING SCREWS OR CARBON STEEL TEK SCREWS, INTO A 12 GA. MIN STEEL STUDS, THRU HEADER TUBE AND STEEL STIFFENER, ALL LOCATED AT 6-1/4" FROM EACH CORNER WITH REMAINING SPACED AT 12" O.C. MAX.

JAMBS: SINGLE ROW OF EIGHT (8) #14x5" FH SS WS, WITH 1-1/2" MIN. PENETRATION INTO 2x WOOD BUCK, THRU JAMB TUBE
OR SINGLE ROW OF EIGHT (8) 1/4"x5" RAWL PERMA-SEAL TAPPER, WITH A 1-1/2" MIN. PENETRATION INTO MASONRY, THRU JAMB TUBE
OR SINGLE ROW OF EIGHT (8) 1/4"-20 SS SELF TAPPING SCREWS OR CARBON STEEL TEK SCREWS, INTO A 12 GA. MIN STEEL STUDS, THRU JAMB TUBE, ALL LOCATED AT 3 1/4" FROM EACH CORNER WITH REMAINING SPACED AT 12" O.C. MAX

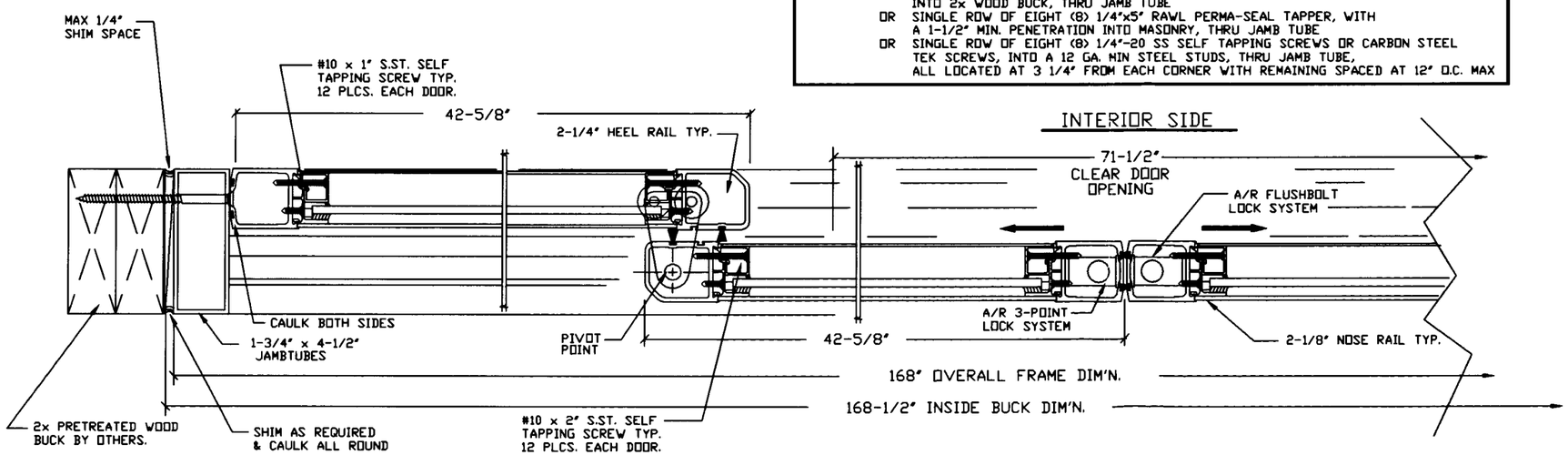

INTERIOR SIDE

EXTERIOR SIDE

PLAN VIEW (SCALE 1:2)

PRODUCT REVISED
as complying with the Florida Building Code
Acceptance No 02-0313.06
Expiration Date JUNE 11, 2006
By Samuel Lerz
Miami Dade Product Control Division

DWG. # WBLT19711(REV. B. 03/02)
WINDBREAKER LT. DOOR SYSTEM
DPR +/- 50 PSF
SHT. 1 OF 6 REV. B.
03-04-02

besam®
AUTOMATIC DOOR SYSTEMS
81 TWIN RIVERS DRIVE
HIGHTSTOWN, NJ 08520-5212
TELEPHONE: 609-443-5800.
TELEFAX: 609-443-3440.

POWER-GLIDE AMD-2

WINDBREAKER LT. DOOR SYSTEM
FIXED SIDELITE BI-PARTING SLIDING DOOR.

TYPICAL WET GLAZING CROSS SECTION

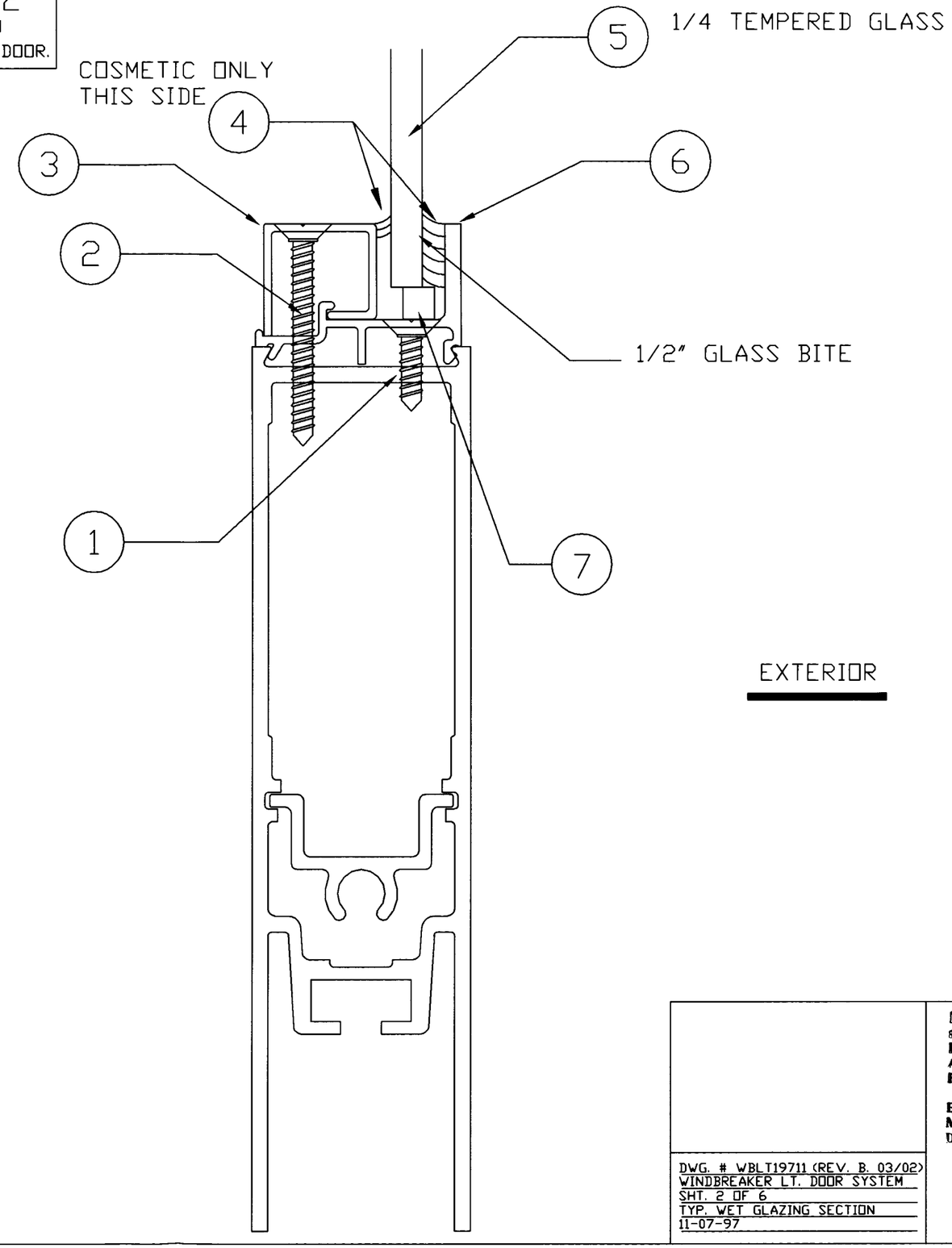

ITEM #	DESCRIPTION	REMARKS
7	RUBBER GLASS SETTING BLOCK.	1/4x1/4x2"
6	GLASS GUTTER EXTR.	DIE# 33211
5	1/4" TEMPERED GLASS.	
4	WET GLAZE G.P. SILICON	
3	GLASS STOP EXTR.	DIE# 33212
2	#10x2" FH SCREW SELF TAPPING.	ST. STEEL.
1	#10x1" FH SCREW SELF TAPPING.	ST. STEEL

DWG. # WBLT19711 (REV. B. 03/02)
WINDBREAKER LT. DOOR SYSTEM
SHT. 2 OF 6
TYP. WET GLAZING SECTION
11-07-97

PRODUCT REVISED
as complying with the Florida Building Code
Acceptance No. 02-0313.06
Expiration Date JUNE 11, 2006
By Miami-Dade Product Control Division

besam® AUTOMATIC DOOR SYSTEMS
81 TWIN RIVERS DRIVE
HIGHTSTOWN, NJ 08520-5212
TELEPHONE: 609-443-5800.
TELEFAX: 609-443-3440.

POWER-GLIDE AMD-2

WINDBREAKER LT. DOOR SYSTEM
FIXED SIDELITE BI-PARTING SLIDING DOOR.

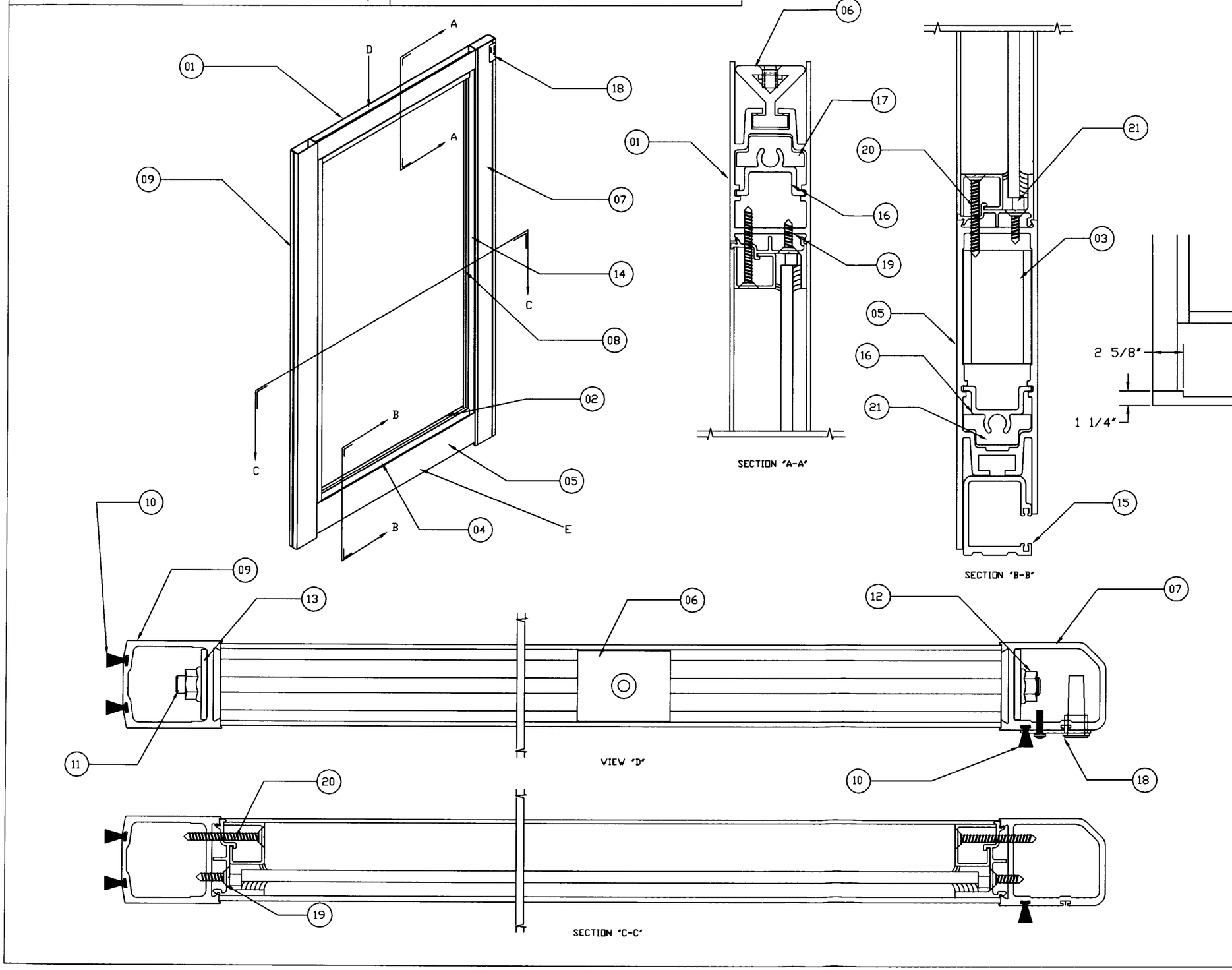

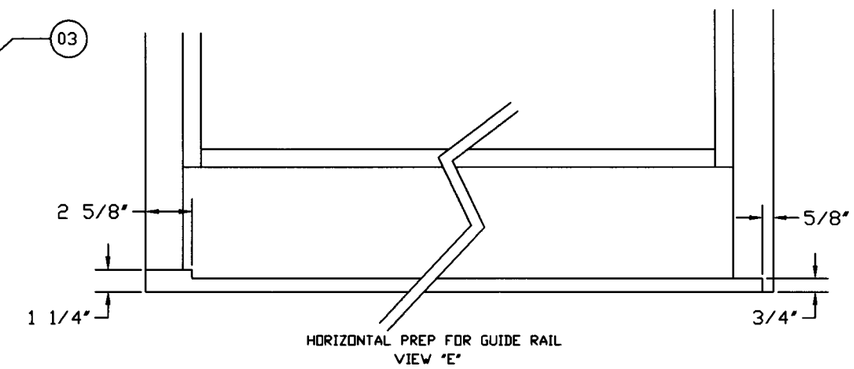

ITEM#	QTY.	DESCRIPTION	DWG.#	REMARKS
21	4	GLASS BLOCK	TPR567	1/4"x1/4"x2"
20	12	STOP SCREW - ST. STL.		#10x2" FHST.
19	12	GUTTER SCREW - ST. STL.		#10x1" FHST.
18	1	BREAK-OUT SWITCH ASSY.	B28250	REF. INSTALL DWG.
17	4	CLIP (DOOR RAIL)	B28290	
16	2	CONTAINMENT EXTR. (TIE ROD)	32664	DIE DWG.
15	1	ROLLER GUIDE SLIDE TRACK	4934XA	DIE DWG.
14	2	GLASS STOP EXTR. (VERT.)	33212	DIE DWG.
13	4	STL. WASHER	A28072	
12	4	3/8 FLANGED NUT		3/8-16TPI.
11	2	TENSION (TIE) ROD 3/8"		3/8-16TPI. STL.
10	3	WEATHERBRUSH PILE		7934-6001-1
09	1	VERTICAL (NOSE) RAIL 2 1/8"	H27064A	DIE DWG.
08	2	GLASS GUTTER EXTR. (VERT.)	33211	DIE DWG.
07	1	VERTICAL (HEEL) RAIL 2 1/4"	27066C	DIE DWG.
06	3	DELTA MTG. CLIP	A28349	
05	1	BOTTOM RAIL 7"	H32711-B	DIE DWG.
04	2	GLASS STOP EXTR. (HORIZ.)	33212	DIE DWG.
03	2	HORIZ. RAIL CLIP	A28283	
02	2	GLASS GUTTER EXTR. (HORIZ.)	33211	DIE DWG.
01	1	TOP RAIL 3 13/16"	H32710	DIE DWG.

DWG. # WBLT19711 (REV. B. 03/02)
WINDBREAKER LT. DOOR SYSTEM
SHT. 3 OF 6
SIDELITE LHS.
11-07-97

PRODUCT REVISED
as complying with the Florida Buiding Code
Acceptance No 02-0313.06
Expiration Date JUNE 11, 2006
By Manuel Perez
Miami Dade Product Control Division

besam®
AUTOMATIC DOOR SYSTEMS
81 TWIN RIVERS DRIVE
HIGHTSTOWN, NJ 08520-5212
TELEPHONE: 609-443-5800.
TELEFAX: 609-443-3440.

POWER-GLIDE AMD-2

WINDBREAKER LT. DOOR SYSTEM
FIXED SIDELITE BI-PARTING SLIDING DOOR.

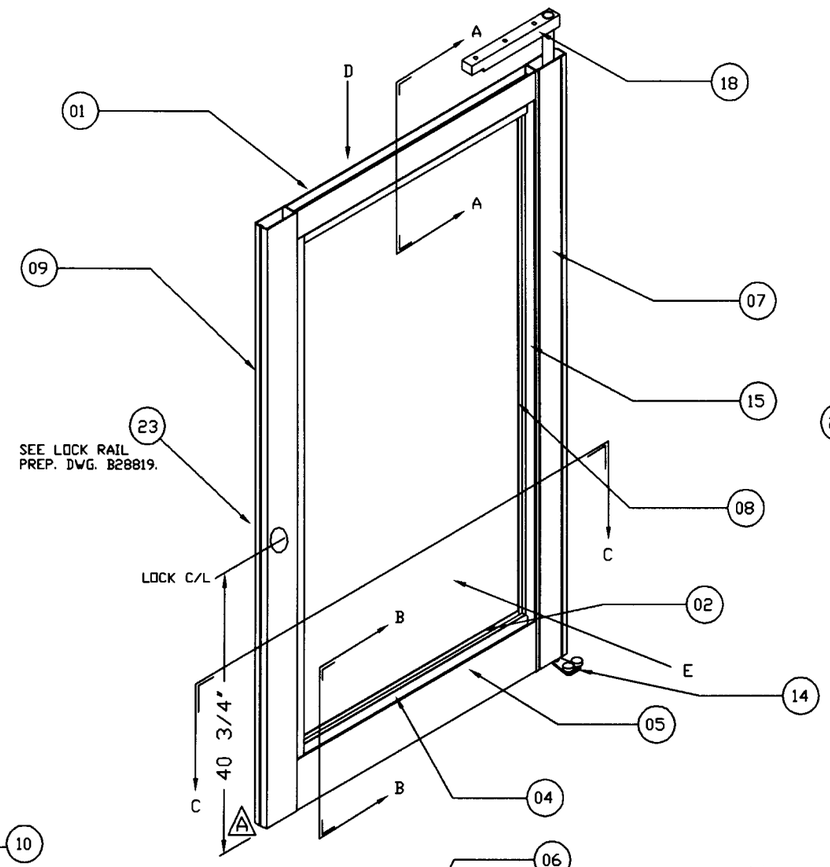

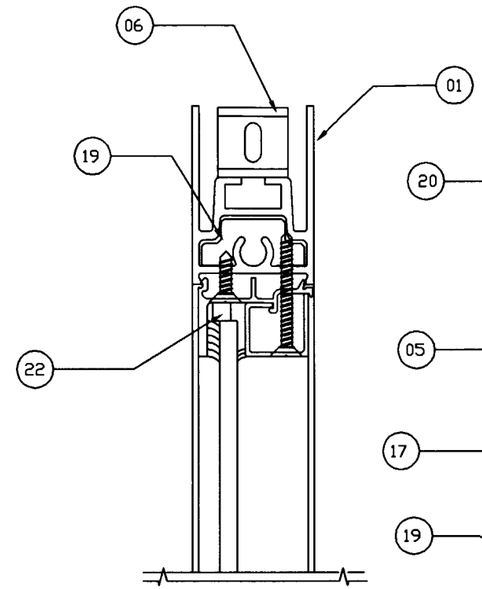

SECTION "A-A"

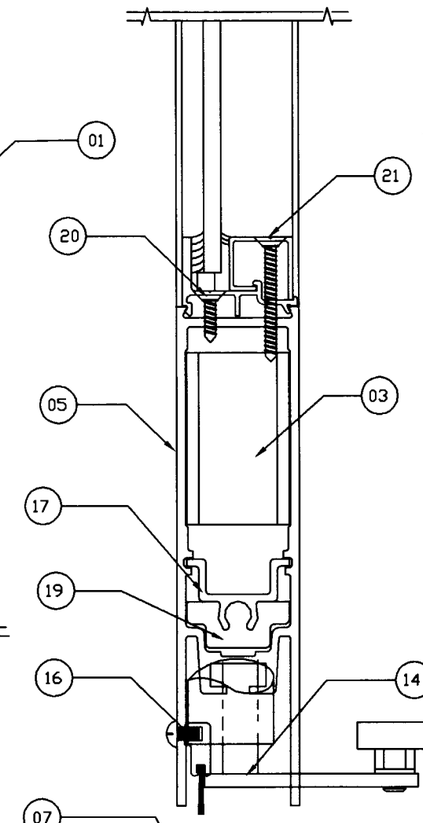

SECTION "B-B"

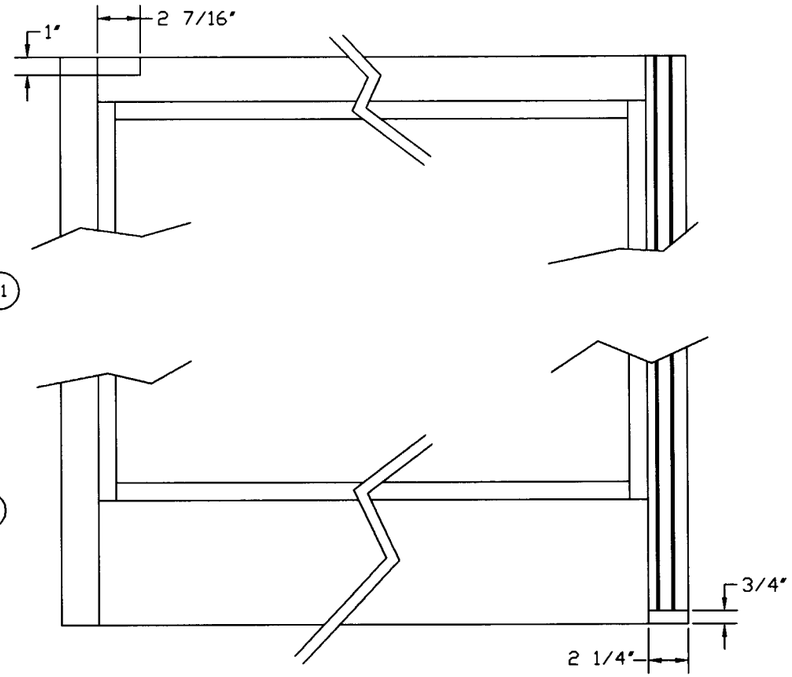

HORIZONTAL PREP FOR GUIDE AND BALLCATCH
VIEW "E"

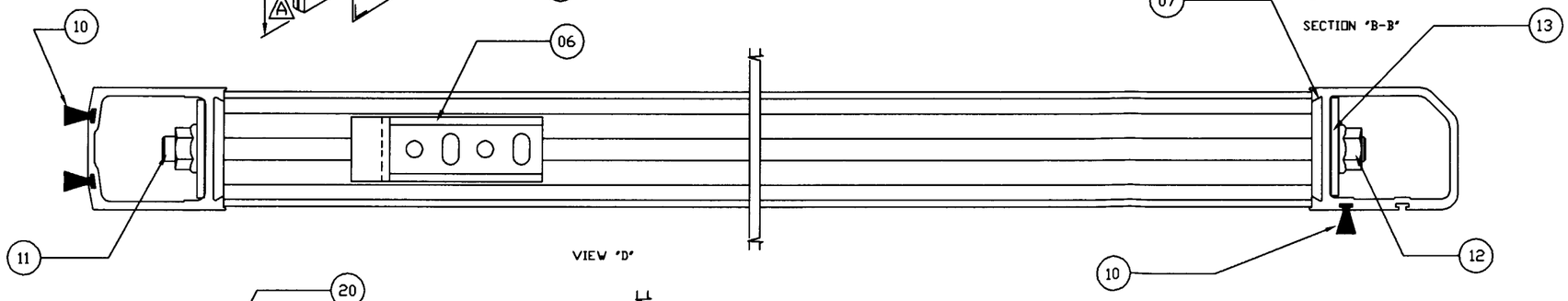

VIEW "D"

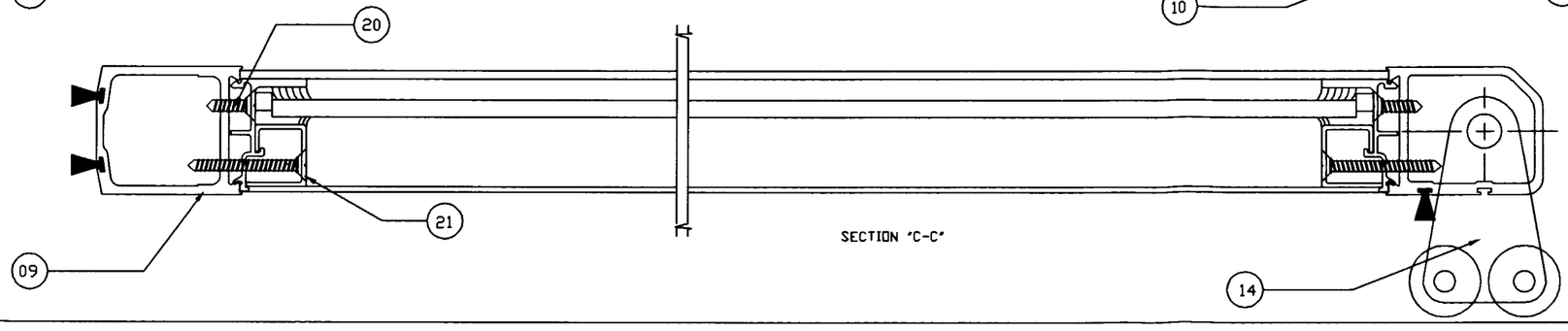

SECTION "C-C"

ITEM#	QTY.	DESCRIPTION	DWG.#	REMARKS
23	1	3-POINT LOCK SYSTEM	A/R	4015/4016 COMBO
22	4	GLASS BLOCK	TPR567	1/4"x1/4"x2"
21	12	STOP SCREW - ST.STL.		#10x2" FHST.
20	12	GUTTER SCREW - ST.STL.		#10x1" FHST.
19	4	CLIP (DOOR RAIL)	B28290	
18	1	PSA (PANIC ARM) ASSY.	A2-831437	
17	1	CONTAINMENT EXTR. (TIE ROD)	32664	DIE DWG.
16	1	DOOR SWEEP KIT	B28375	
15	2	GLASS STOP EXTR. (VERT.)	33212	DIE DWG.
14	1	ROLLER GUIDE ASSY.	A28078	
13	4	STL. WASHER	A28072	
12	4	3/8 FLANGED NUT		3/8-16TPI.
11	2	TENSION (TIE) ROD 3/8"		3/8-16TPI. STL.
10	3	WEATHERBRUSH PILE		7934-6001-1
09	1	VERTICAL (NOSE) RAIL 2 1/8"	H27064A	DIE DWG.
08	2	GLASS GUTTER EXTR. (VERT.)	33211	DIE DWG.
07	1	VERTICAL (HEEL) RAIL 2 1/4"	27066C	DIE DWG.
06	1	BALLCATCH LATCHPLATE	831616	
05	1	BOTTOM RAIL 7"	H32711-B	DIE DWG.
04	2	GLASS STOP EXTR. (HORIZ.)	33212	DIE DWG.
03	2	HORIZ. RAIL CLIP	A28283	
02	2	GLASS GUTTER EXTR. (HORIZ.)	33211	DIE DWG.
01	1	TOP RAIL 2 1/2"	H2979	DIE DWG.

PRODUCT REVISED
as complying with the Florida Building Code
Acceptance No. 02-0313.06
Expiration Date JUNE 11 2006
By Miami Dade Product Control Division

DWG. # WBLT19711(REV. B. 03/02)
WINDBREAKER LT. DOOR SYSTEM
SHT. 4 OF 6 REV. A.
ACTIVE LEAF LHS.
04-30-98

besam®
AUTOMATIC DOOR SYSTEMS
81 TWIN RIVERS DRIVE
HIGHTSTOWN, NJ 08520-5212
TELEPHONE: 609-443-5800.
TELEFAX: 609-443-3440.

POWER-GLIDE AMD-2

WINDBREAKER LT. DOOR SYSTEM
FIXED SIDELITE BI-PARTING SLIDING DOOR.

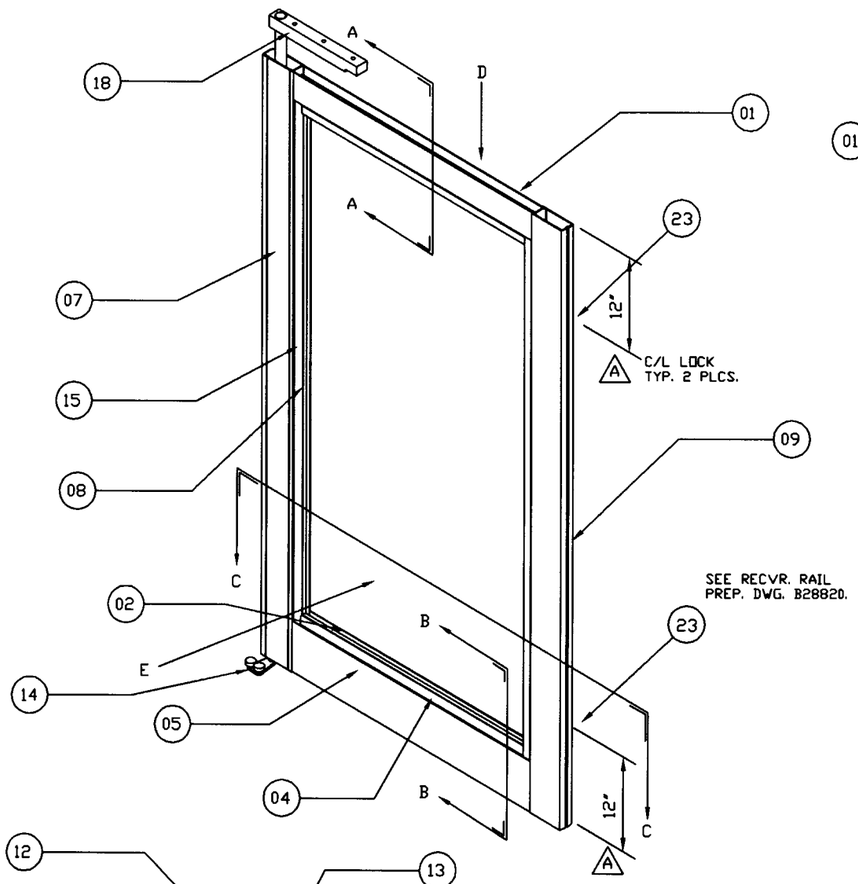

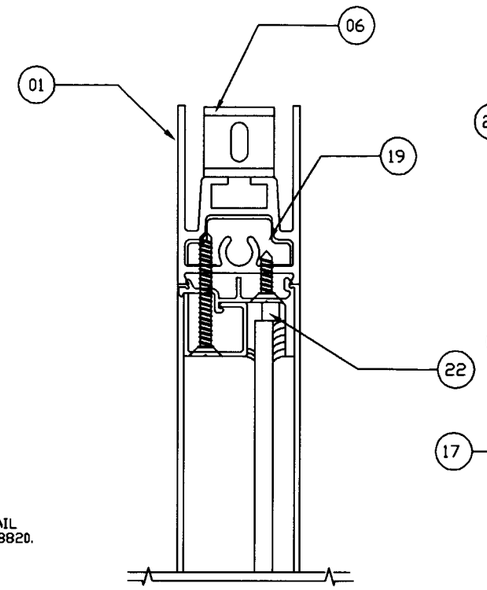

SECTION "A-A"

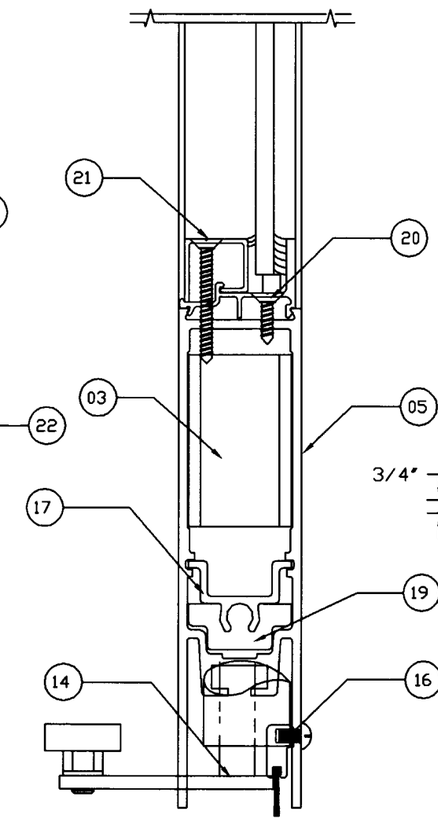

SECTION "B-B"

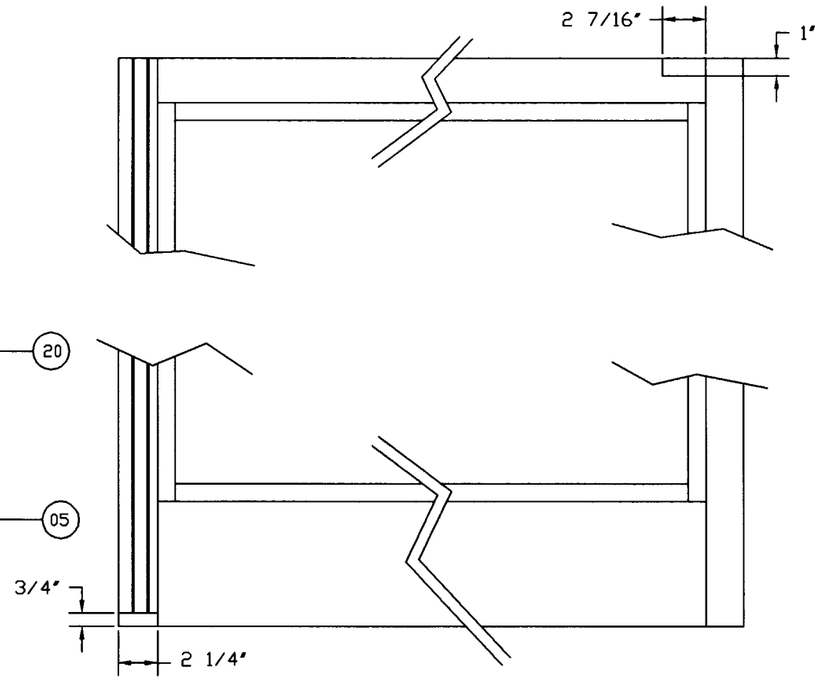

HORIZONTAL PREP FOR GUIDE AND BALLCATCH
VIEW "E"

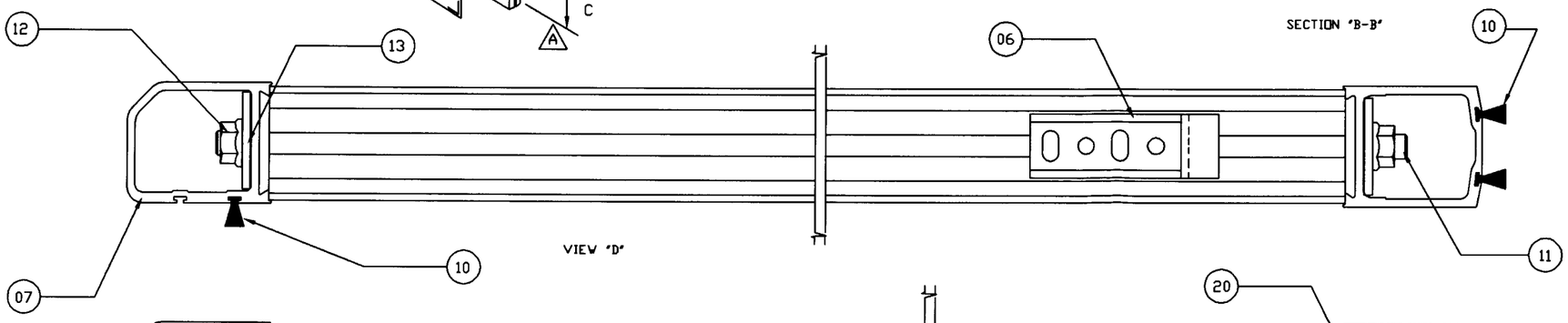

VIEW "D"

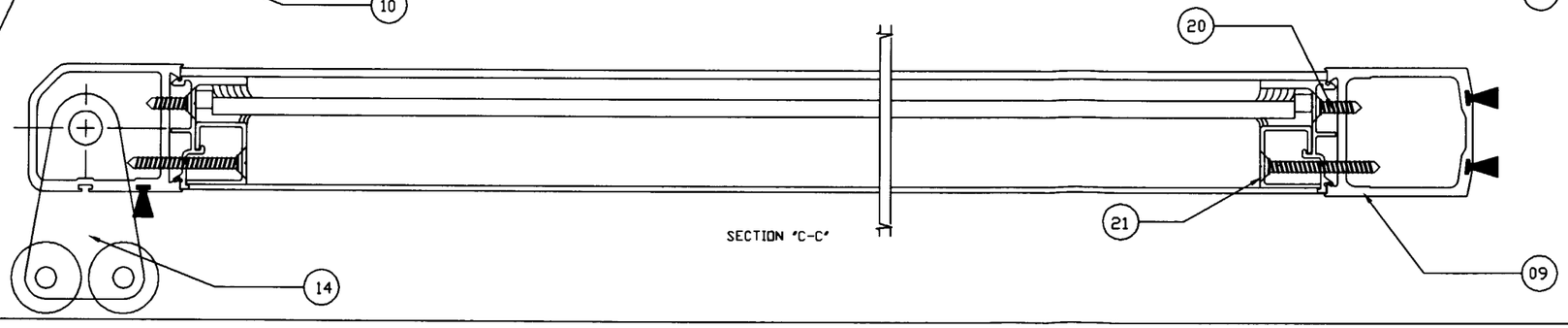

SECTION "C-C"

ITEM#	QTY.	DESCRIPTION	DWG.#	REMARKS
23	2	2-POINT LOCK SYSTEM	A/R	MS1850/1870 COMBO
22	4	GLASS BLOCK	TPR567	1/4"x1/4"x2"
21	12	STOP SCREW - ST.STL.		#10x2" FHST.
20	12	GUTTER SCREW - ST.STL.		#10x1" FHST.
19	4	CLIP (DOOR RAIL)	B28290	
18	1	PSA (PANIC ARM) ASSY.	A2-831437	
17	1	CONTAINMENT EXTR. (TIE ROD)	32664	DIE DWG.
16	1	DOOR SWEEP KIT	B28375	
15	2	GLASS STOP EXTR. (VERT.)	33212	DIE DWG.
14	1	ROLLER GUIDE ASSY.	A28078	
13	4	STL. WASHER	A28072	
12	4	3/8 FLANGED NUT		3/8-16TPI.
11	2	TENSION (TIE) ROD 3/8"		3/8-16TPI. STL.
10	3	WEATHERBRUSH PILE		7934-6001-1
09	1	VERTICAL (NOSE) RAIL 2 1/8"	H27064A	DIE DWG.
08	2	GLASS GUTTER EXTR. (VERT.)	33211	DIE DWG.
07	1	VERTICAL (HEEL) RAIL 2 1/4"	27066C	DIE DWG.
06	1	BALLCATCH LATCHPLATE	831616	
05	1	BOTTOM RAIL 7"	H32711-B	DIE DWG.
04	2	GLASS STOP EXTR. (HORIZ.)	33212	DIE DWG.
03	2	HORIZ. RAIL CLIP	A28283	
02	2	GLASS GUTTER EXTR. (HORIZ.)	33211	DIE DWG.
01	1	TOP RAIL 2 1/2"	H2979	DIE DWG.

DWG. # WBLT19711(REV. B. 03/02)
WINDBREAKER LT. DOOR SYSTEM
SHT. 5 OF 6 REV. A.
ACTIVE LEAF RHS.
04-30-98

PRODUCT REVISED
as complying with the Florida Building Code
Acceptance No. 02-0313.06
Expiration Date JUNE 11, 2006
By Manuel Perez
Miami-Dade Product Control Division

besam®
AUTOMATIC DOOR SYSTEMS
81 TWIN RIVERS DRIVE
HIGHTSTOWN, NJ 08520-5212
TELEPHONE: 609-443-5800.
TELEFAX: 609-443-3440.

POWER-GLIDE AMD-2

WINDBREAKER LT. DOOR SYSTEM
FIXED SIDELITE BI-PARTING SLIDING DOOR.

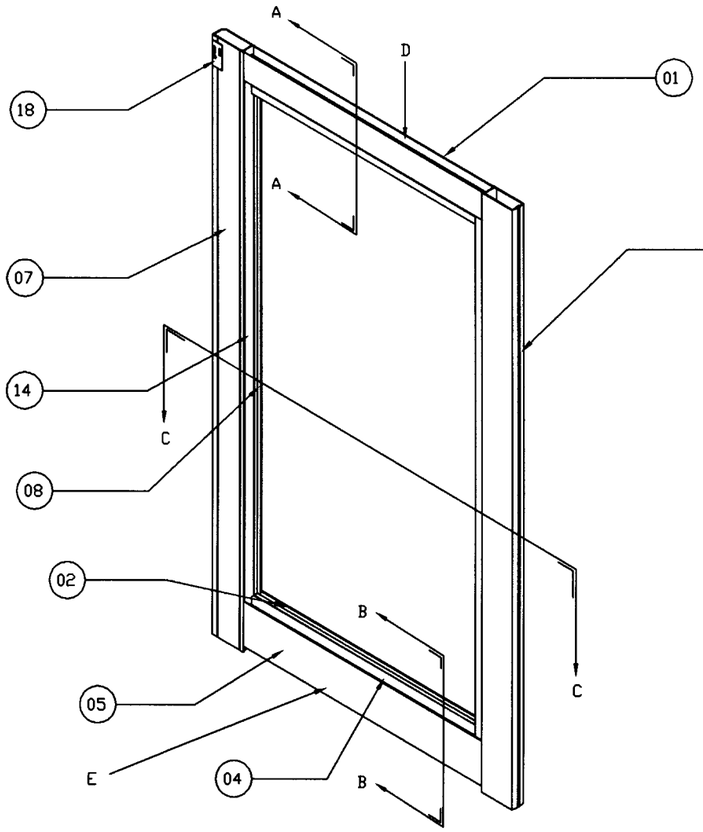

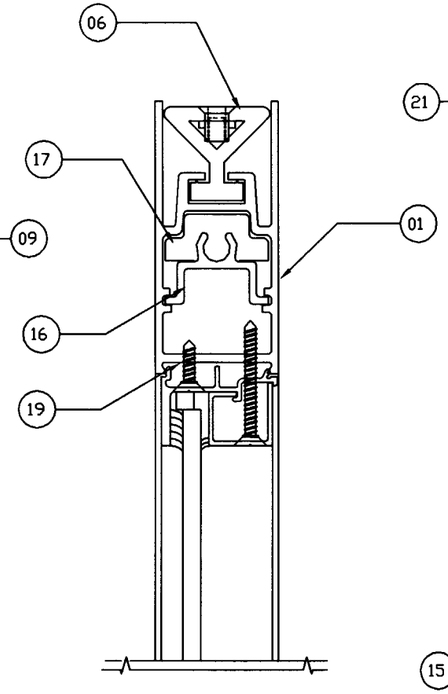

SECTION "A-A"

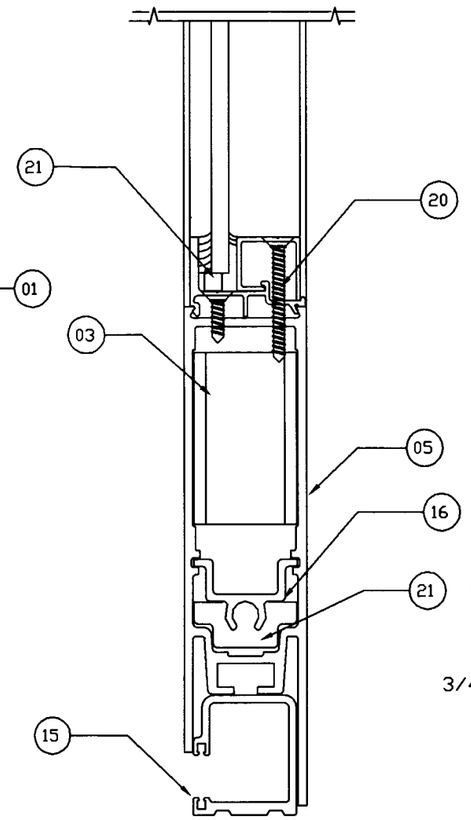

SECTION "B-B"

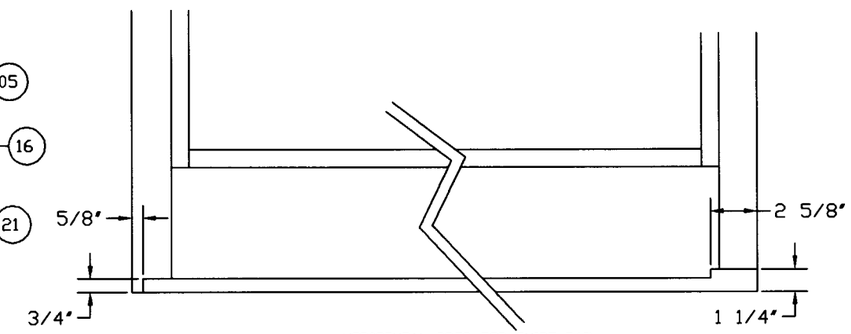

HORIZONTAL PREP FOR GUIDE RAIL
VIEW "E"

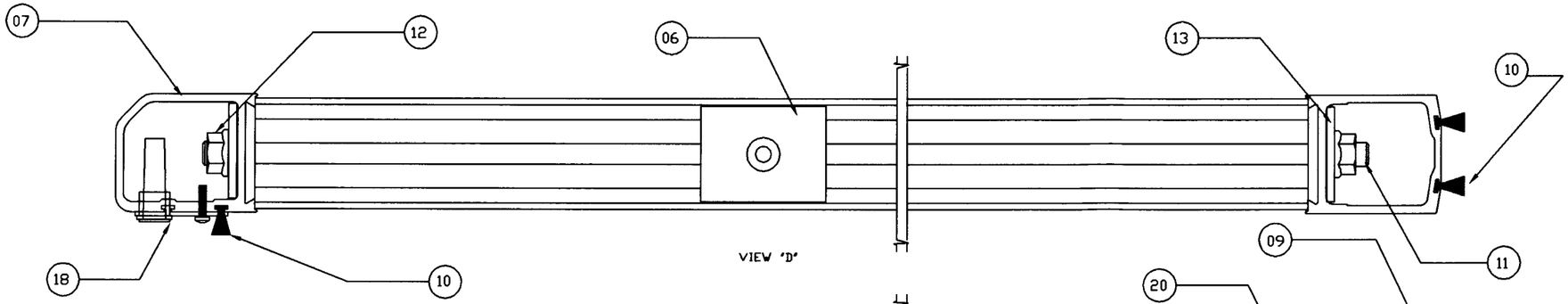

VIEW "D"

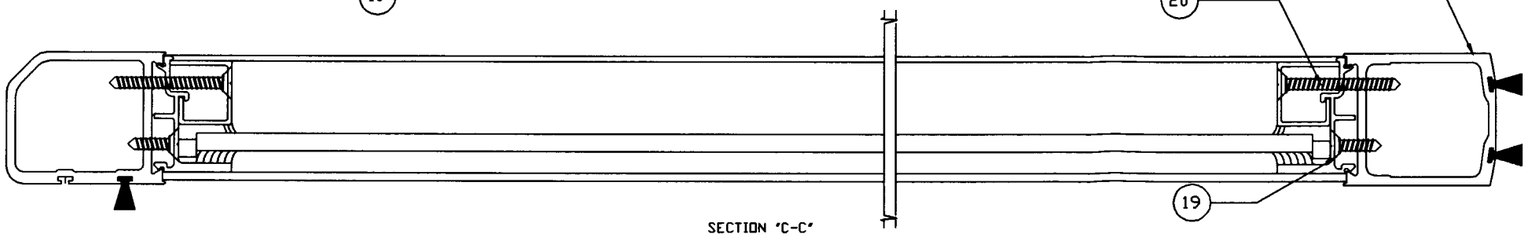

SECTION "C-C"

ITEM#	QTY.	DESCRIPTION	DWG.#	REMARKS
21	4	GLASS BLOCK	TPR567	1/4"x1/4"x2"
20	12	STOP SCREW - ST. STL.		#10x2" FHST.
19	12	GUTTER SCREW - ST. STL.		#10x1" FHST.
18	1	BREAK-OUT SWITCH ASSY.	B28250	REF. INSTALL DWG.
17	4	CLIP (DOOR RAIL)	B28290	
16	2	CONTAINMENT EXTR. (TIE ROD)	32664	DIE DWG.
15	1	ROLLER GUIDE SLIDE TRACK	4934XA	DIE DWG.
14	2	GLASS STOP EXTR. (VERT.)	33212	DIE DWG.
13	4	STL. WASHER	A28072	
12	4	3/8 FLANGED NUT		3/8-16TPI.
11	2	TENSION (TIE) ROD 3/8"		3/8-16TPI. STL.
10	3	WEATHERBRUSH PILE		7934-6001-1
09	1	VERTICAL (NOSE) RAIL 2 1/8"	H27064A	DIE DWG.
08	2	GLASS GUTTER EXTR. (VERT.)	33211	DIE DWG.
07	1	VERTICAL (HEEL) RAIL 2 1/4"	27066C	DIE DWG.
06	3	DELTA MTG. CLIP	A28349	
05	1	BOTTOM RAIL 7"	H32711-B	DIE DWG.
04	2	GLASS STOP EXTR. (HORIZ.)	33212	DIE DWG.
03	2	HORIZ. RAIL CLIP	A28283	
02	2	GLASS GUTTER EXTR. (HORIZ.)	33211	DIE DWG.
01	1	TOP RAIL 3 13/16"	H32710	DIE DWG.

DWG. # WBLT19711 (REV. B. 03/02)
WINDBREAKER LT. DOOR SYSTEM
SHT. 6 OF 6
SIDELITE RHS.
11-07-97

PRODUCT REVISED
as complying with the Florida Buiding Code
Acceptance No. 02-0313.06
Expiration Date JUNE 11, 2006
By Manuel Perez
Miami Dade Product Control Division

besam®
AUTOMATIC DOOR SYSTEMS
81 TWIN RIVERS DRIVE
HIGHTSTOWN, NJ 08520-5212
TELEPHONE: 609-443-5800.
TELEFAX: 609-443-3440.

POWER-GLIDE AMD-2

WINDBREAKER LT. DOOR SYSTEM
FULL BREAKOUT BI-PARTING SLIDING DOOR.

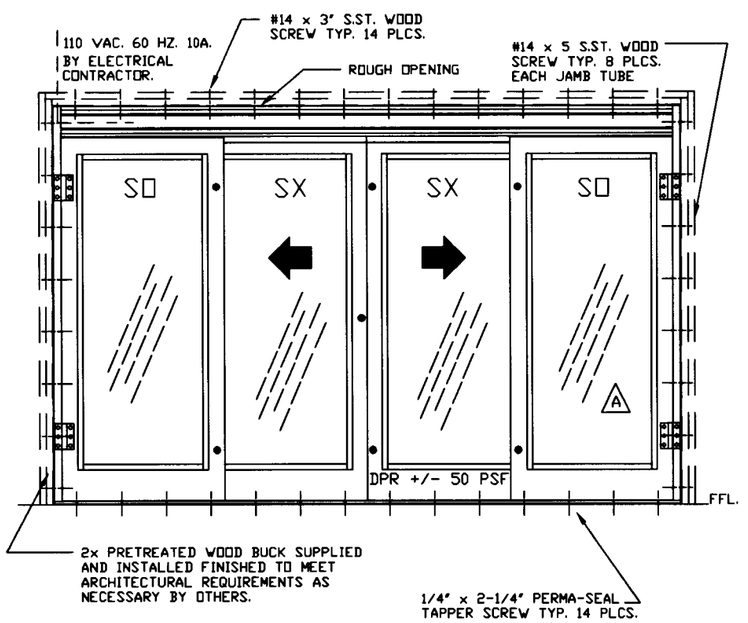

EXTERIOR ELEVATION (N.T.S.)

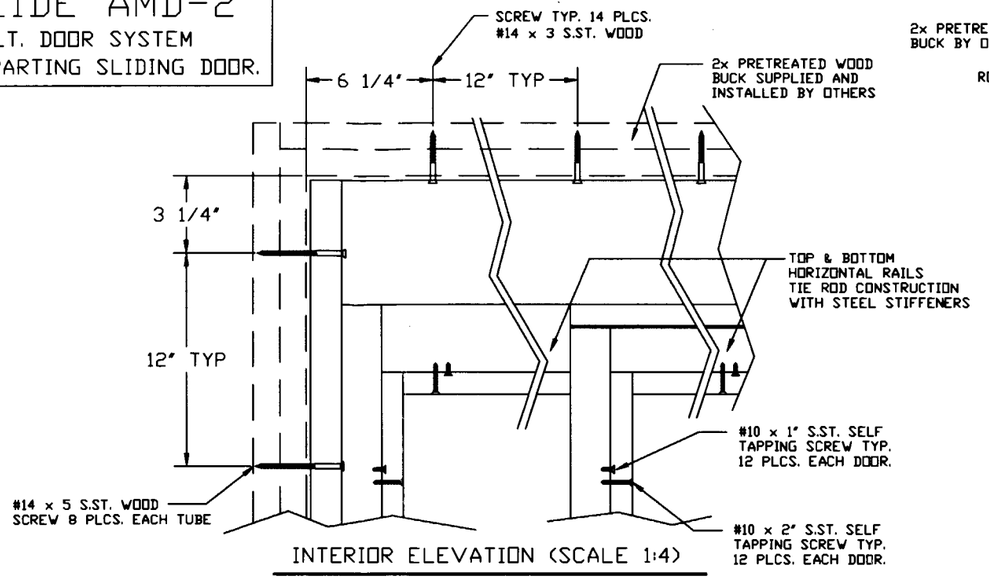

INTERIOR ELEVATION (SCALE 1:4)

B

NOTE: REFERENCE ORIGINAL NOPA 97-0903.08 E.1.B.& E.1.C
SCREWS & METHOD OF ATTATCHMENT
SILL: SINGLE ROW OF FOURTEEN (14) #14x3" FH SS WS, WITH 1-1/2" MIN. PENETRATION INTO 2x WOOD BUCK, STAGGERED THRU SILL TRACK & GUIDE SLIDE TRACK
OR SINGLE ROW OF FOURTEEN (14) 1/4"x2-1/4" RAWL PERMA-SEAL TAPPER, WITH A 1-1/2" MIN. PENETRATION INTO MASONRY, STAGGERED THRU SILL TRACK.
OR SINGLE ROW OF FOURTEEN (14) 1/4"-20 SS SELF TAPPING SCREWS OR CARBON STEEL TEK SCREWS, INTO A 12 GA. MIN STEEL STUDS, STAGGERED THRU SILL TRACK & GUIDE SLIDE TRACK, ALL LOCATED AT 6-1/4" FROM EACH CORNER WITH REMAINING SPACED AT 12" O.C. MAX.
HEAD: SINGLE ROW OF FOURTEEN (14) #14x3" FH SS WS, WITH 1-1/2" MIN. PENETRATION INTO 2x WOOD BUCK, THRU HEADER TUBE AND STEEL STIFFENER
OR SINGLE ROW OF FOURTEEN (14) 1/4"x3" RAWL PERMA-SEAL TAPPER, WITH A 1-1/2" MIN. PENETRATION INTO MASONRY, THRU HEADER TUBE AND STEEL STIFFENER
OR SINGLE ROW OF FOURTEEN (14) 1/4"-20 SS SELF TAPPING SCREWS OR CARBON STEEL TEK SCREWS, INTO A 12 GA. MIN STEEL STUDS, THRU HEADER TUBE AND STEEL STIFFENER, ALL LOCATED AT 6-1/4" FROM EACH CORNER WITH REMAINING SPACED AT 12" O.C. MAX.
JAMBS: SINGLE ROW OF EIGHT (8) #14x5" FH SS WS, WITH 1-1/2" MIN. PENETRATION INTO 2x WOOD BUCK, THRU JAMB TUBE
OR SINGLE ROW OF EIGHT (8) 1/4"x5" RAWL PERMA-SEAL TAPPER, WITH A 1-1/2" MIN. PENETRATION INTO MASONRY, THRU JAMB TUBE
OR SINGLE ROW OF EIGHT (8) 1/4"-20 SS SELF TAPPING SCREWS OR CARBON STEEL TEK SCREWS, INTO A 12 GA. MIN STEEL STUDS, THRU JAMB TUBE, ALL LOCATED AT 3-1/4" FROM EACH CORNER WITH REMAINING SPACED AT 12" O.C. MAX

INTERIOR SIDE

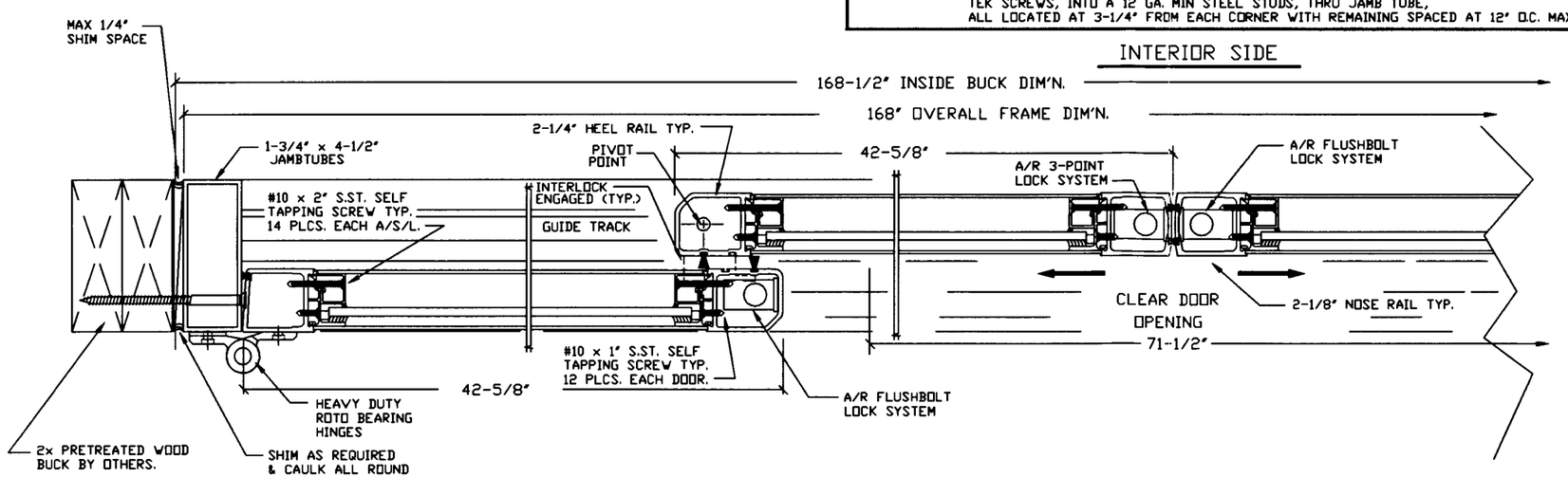

PLAN VIEW (SCALE 1:2)

EXTERIOR SIDE

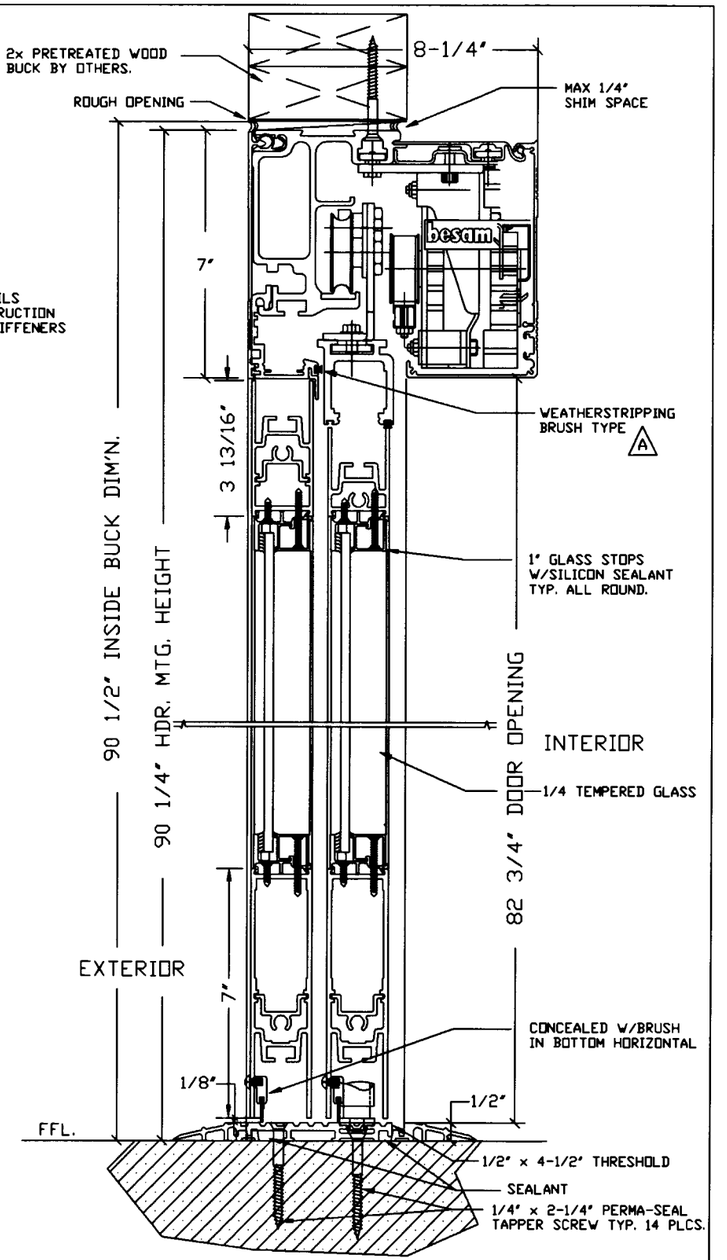

SIDE ELEVATION (SCALE 1:2)

PRODUCT REVISED
as complying with the Florida Building Code
Acceptance No 02-0313.06
Expiration Date JUNE 11, 2006
By Manuel Sirez
Miami Dade Product Control Division

DWG. # WBLT29711 (REV. B. 03/02)
WINDBREAKER LT. DOOR SYSTEM
DPR +/- 50 PSF
SHT. 1 OF 6 REV. B.
03-04-02

besam®
AUTOMATIC DOOR SYSTEMS
81 TWIN RIVERS DRIVE
HIGHTSTOWN, NJ 08520-5212
TELEPHONE: 609-443-5800.
TELEFAX: 609-443-3440.

POWER-GLIDE AMD-2

WINDBREAKER LT. DOOR SYSTEM
FULL BREAKOUT BI-PARTING SLIDING DOOR.

TYPICAL WET GLAZING CROSS SECTION

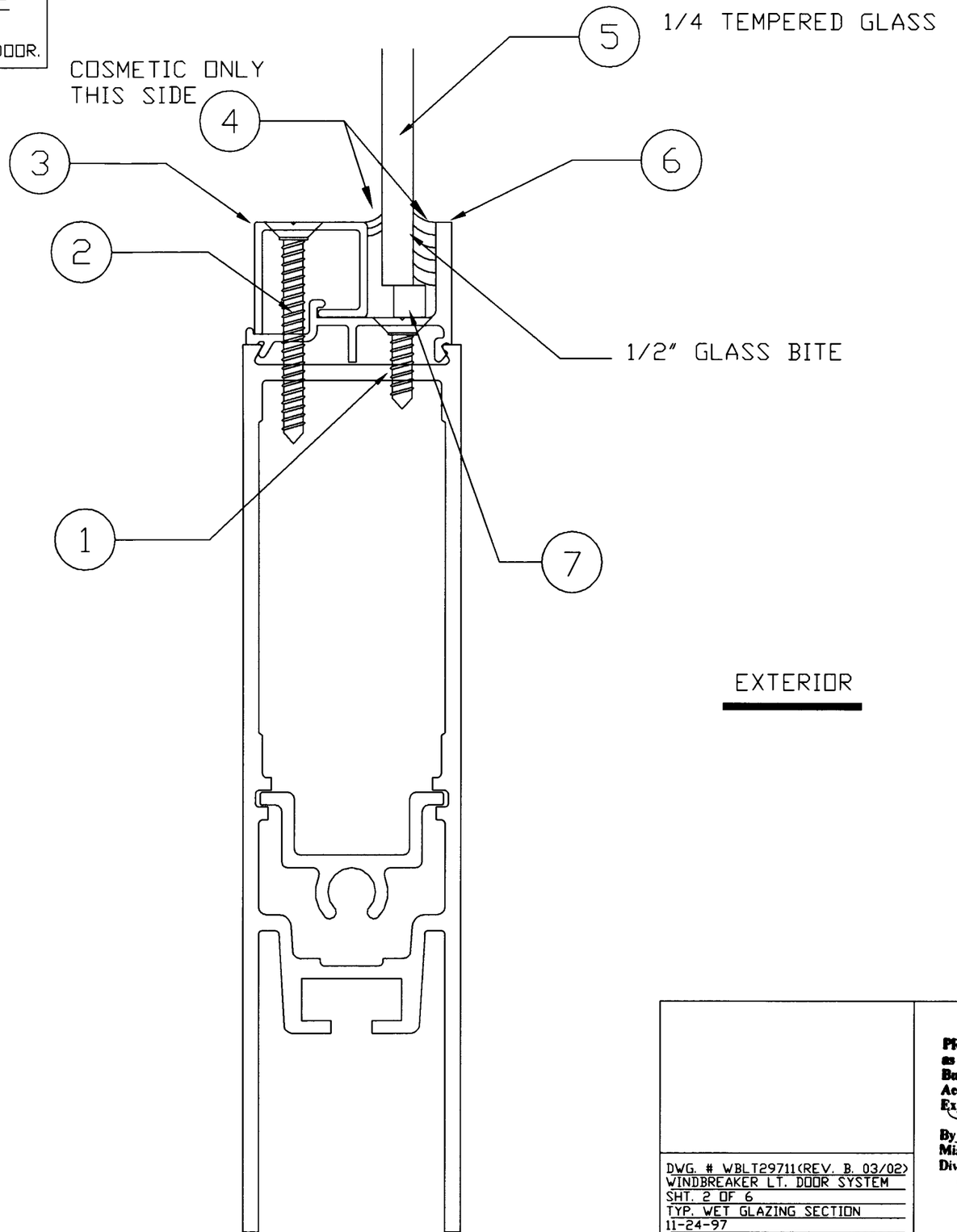

ITEM #	DESCRIPTION	REMARKS
7	RUBBER GLASS SETTING BLOCK.	1/4x1/4x2"
6	GLASS GUTTER EXTR.	DIE# 33211
5	1/4" TEMPERED GLASS.	
4	WET GLAZE G.P. SILICON	
3	GLASS STOP EXTR.	DIE# 33212
2	#10x2" FH SCREW SELF TAPPING.	ST. STEEL.
1	#10x1" FH SCREW SELF TAPPING.	ST. STEEL

DWG. # WBLT29711(REV. B. 03/02)
WINDBREAKER LT. DOOR SYSTEM
SHT. 2 OF 6
TYP. WET GLAZING SECTION
11-24-97

PRODUCT REVISED
as complying with the Florida Building Code
Acceptance No. 02-0313.06
Expiration Date JUNE 17, 2006
By
Miami Dade Product Control Division

besam®
AUTOMATIC DOOR SYSTEMS
81 TWIN RIVERS DRIVE
HIGHTSTOWN, NJ 08520-5212
TELEPHONE: 609-443-5800.
TELEFAX: 609-443-3440.

POWER-GLIDE AMD-2

WINDBREAKER LT. DOOR SYSTEM
FULL BREAKOUT BI-PARTING SLIDING DOOR.

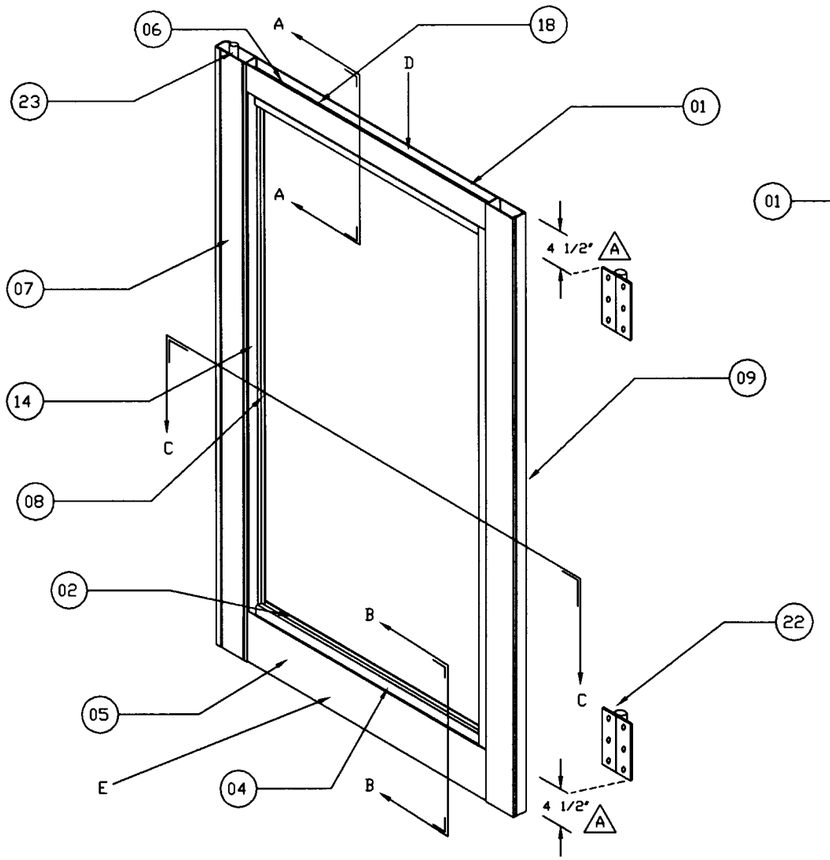

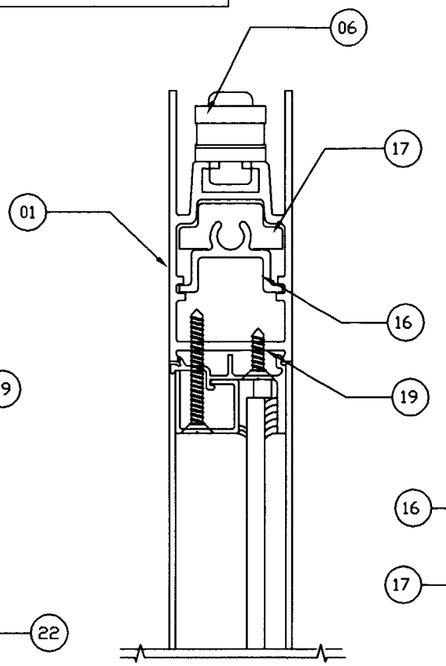

SECTION "A-A"

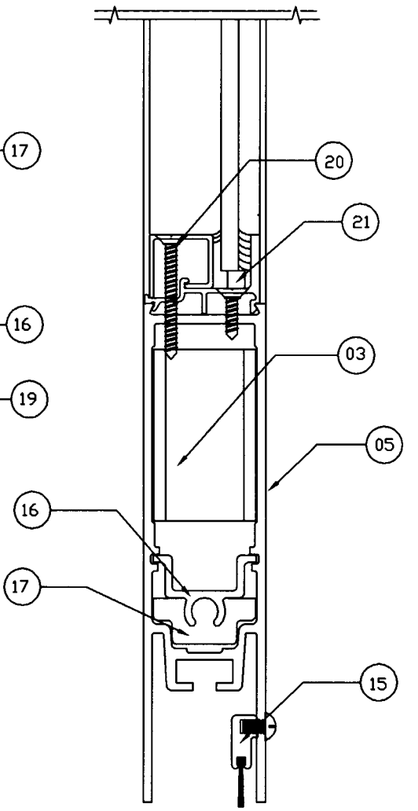

SECTION "B-B"

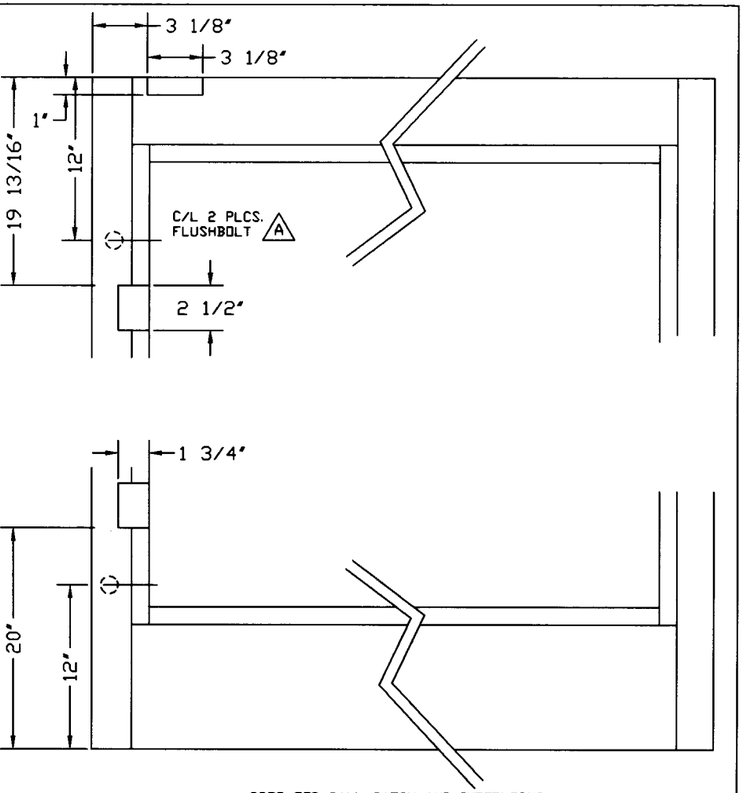

PREP FOR BALL CATCH AND INTERLOCKS
VIEW "E"

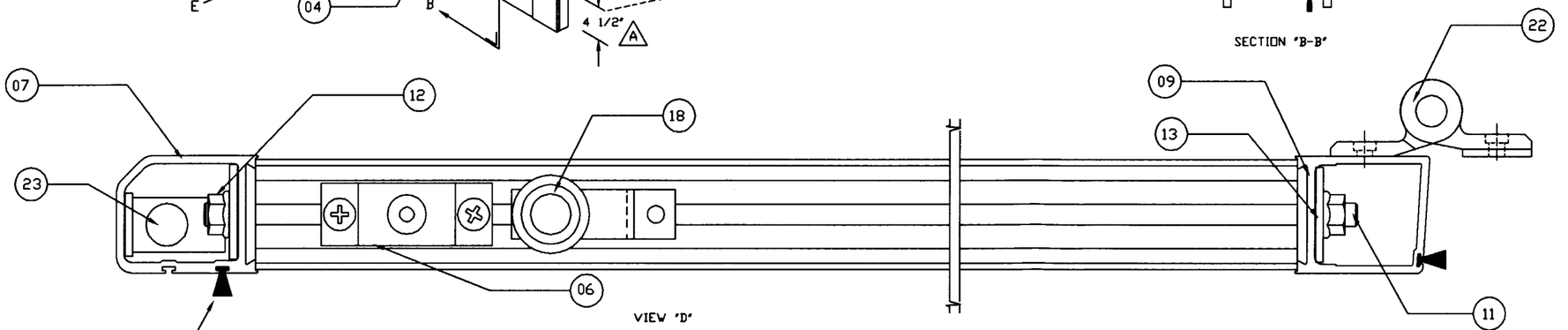

VIEW "D"

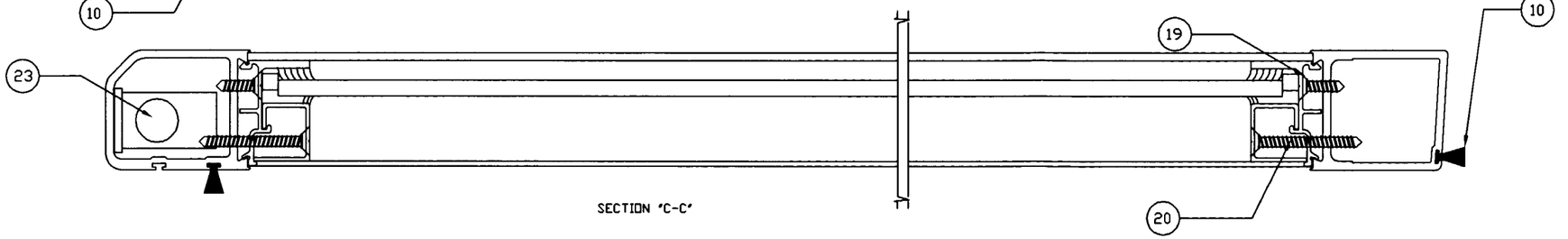

SECTION "C-C"

ITEM#	QTY.	DESCRIPTION	DWG.#	REMARKS
23	2	FLUSH BOLT ASSY	A/R	A/R 1870 SERIES
22	1	H.D. SECURITY HINGE SET	B28647	REF. INSTALL DWG.
21	4	GLASS BLOCK	TPR567	1/4"x1/4"x2"
20	12	STOP SCREW - ST. STL.		#10x2" FHST.
19	12	GUTTER SCREW - ST. STL.		#10x1" FHST.
18	1	BREAK-OUT MAGNET ASSY.	A29036	
17	4	CLIP (DOOR RAIL)	B28290	
16	2	CONTAINMENT EXTR. (TIE ROD)	32664	DIE DWG.
15	1	DOOR SWEEP KIT	B28375	
14	2	GLASS STOP EXTR. (VERT.)	33212	DIE DWG.
13	4	STL. WASHER	A28072	
12	4	3/8 FLANGED NUT		3/8-16TPI.
11	2	TENSION (TIE) ROD 3/8"		3/8-16TPI. STL.
10	2	WEATHERBRUSH PILE		7934-6001-1
09	1	VERTICAL (HEEL) RAIL 2 1/8"	H27065	DIE DWG.
08	2	GLASS GUTTER EXTR. (VERT.)	33211	DIE DWG.
07	1	VERTICAL (NOSE) RAIL 2 1/4"	27066C	DIE DWG.
06	1	BALLCATCH ASSEMBLY	A3 831166	DOOR PORTION
05	1	BOTTOM RAIL 7"	H32711-B	DIE DWG.
04	2	GLASS STOP EXTR. (HORIZ.)	33212	DIE DWG.
03	2	HORIZ. RAIL CLIP	A28283	
02	2	GLASS GUTTER EXTR. (HORIZ.)	33211	DIE DWG.
01	1	TOP RAIL 3 13/16"	H32710	DIE DWG.

PRODUCT REVISED
as complying with the Florida Building Code
Acceptance No. 02-0313.06
Expiration Date JUNE 11, 2006
By Manuel Perez
Miami Dade Product Control Division

DWG. # WBLT29711(REV. B. 03/02)
WINDBREAKER LT. DOOR SYSTEM
SHT. 3 OF 6 REV. A.
SIDELITE LHS.
04-30-98

besam®
AUTOMATIC DOOR SYSTEMS
81 TWIN RIVERS DRIVE
HIGHTSTOWN, NJ 08520-5212
TELEPHONE: 609-443-5800.
TELEFAX: 609-443-3440.

POWER-GLIDE AMD-2

WINDBREAKER LT. DOOR SYSTEM

FULL BREAKOUT BI-PARTING SLIDING DOOR.

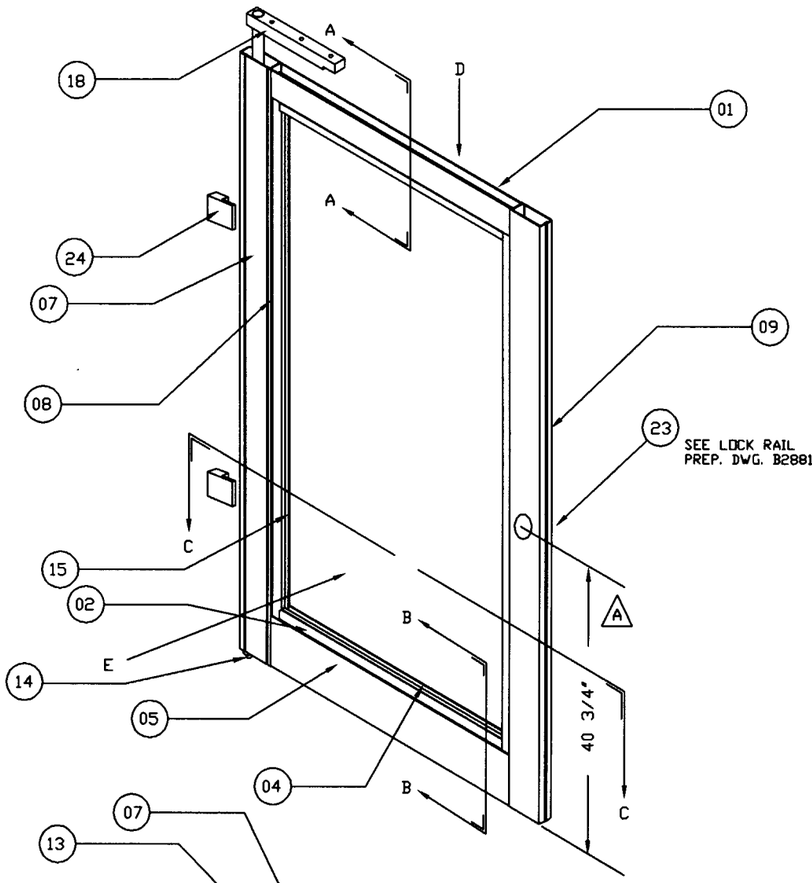

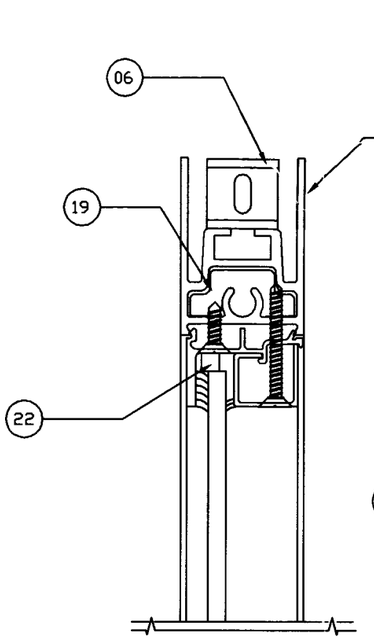

SECTION "A-A"

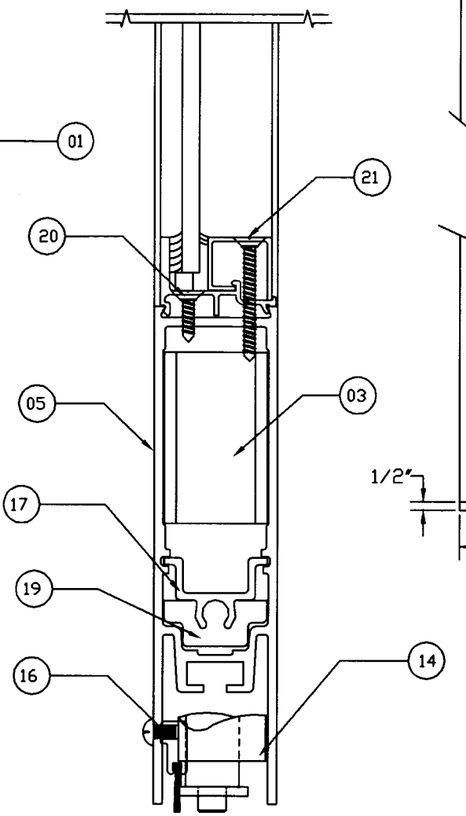

SECTION "B-B"

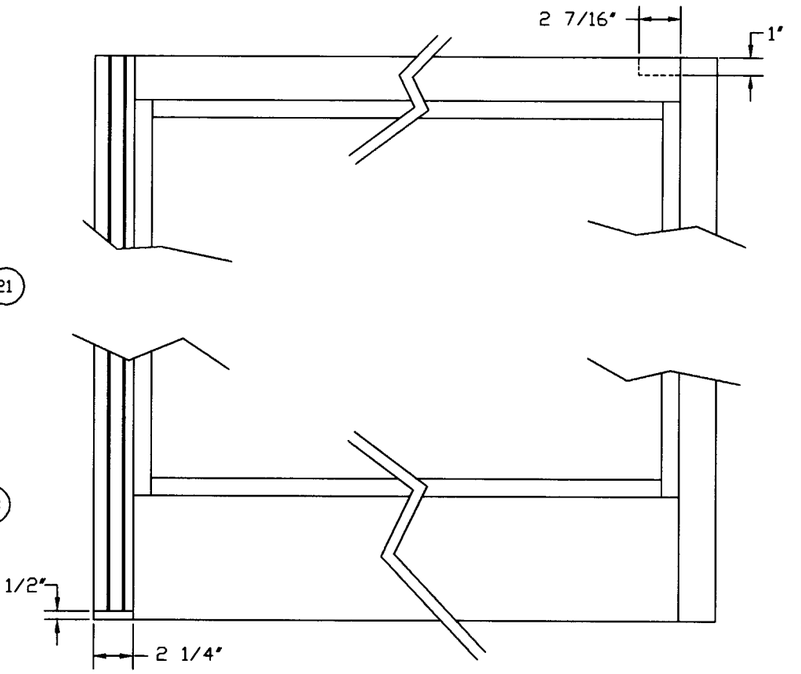

HORIZONTAL PREP FOR GUIDE AND BALLCATCH
VIEW "E"

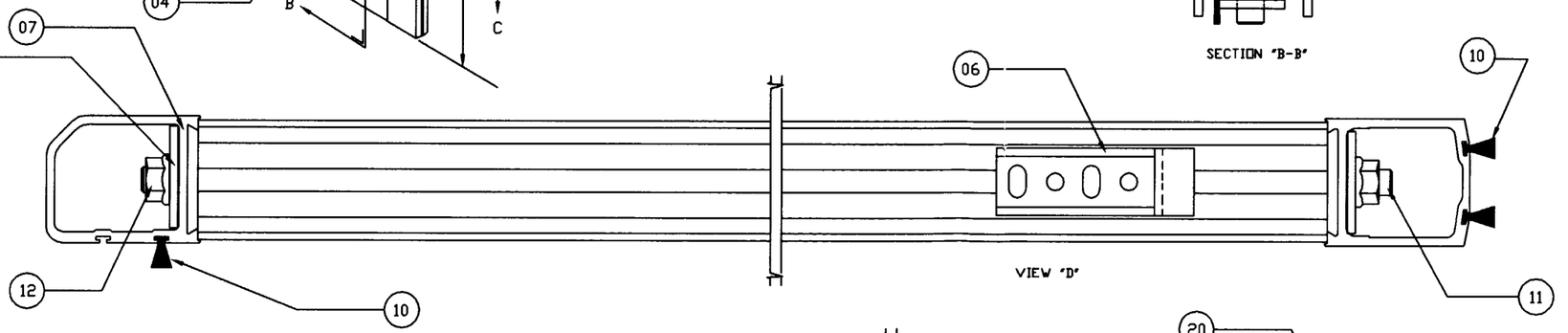

VIEW "D"

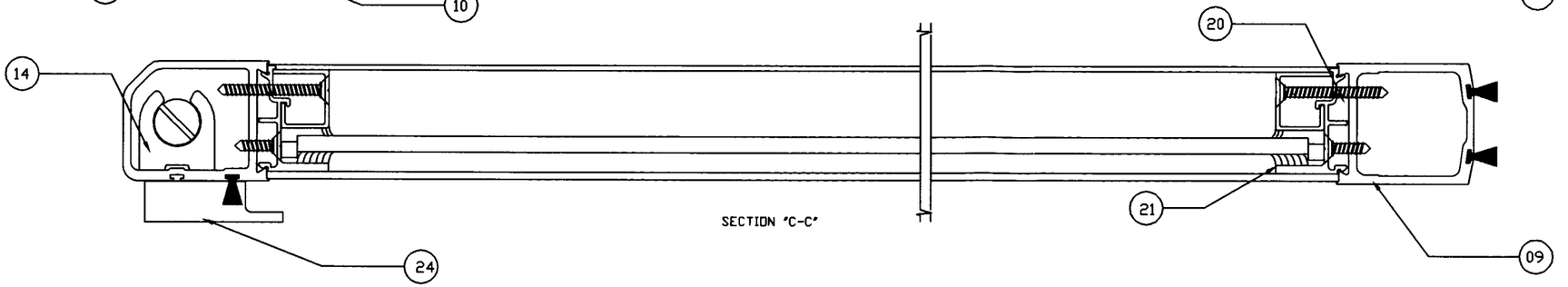

SECTION "C-C"

ITEM#	QTY.	DESCRIPTION	DWG.#	REMARKS
24	2	INTERLOCK W/SHIM KIT	A4-830468	
23	1	3-POINT LOCK SYSTEM	A/R	4015/4016 COMBO
22	4	GLASS BLOCK	TPR567	1/4"x1/4"x2"
21	12	STOP SCREW - ST.STL.		#10x2" FHST.
20	12	GUTTER SCREW - ST.STL.		#10x1" FHST.
19	4	CLIP (DOOR RAIL)	B28290	
18	1	PSA (PANIC ARM) ASSY.	A2-831437	
17	1	CONTAINMENT EXTR. (TIE ROD)	32664	DIE DWG.
16	1	DOOR SWEEP KIT	B28375	
15	2	GLASS STOP EXTR. (VERT.)	33212	DIE DWG.
14	1	PIN GUIDE ASSY.	B28237	
13	4	STL. WASHER	A28072	
12	4	3/8 FLANGED NUT		3/8-16TPI.
11	2	TENSION (TIE) ROD 3/8"		3/8-16TPI. STL.
10	3	WEATHERBRUSH PILE		7934-6001-1
09	1	VERTICAL (NOSE) RAIL 2 1/8"	H27064A	DIE DWG.
08	2	GLASS GUTTER EXTR. (VERT.)	33211	DIE DWG.
07	1	VERTICAL (HEEL) RAIL 2 1/4"	27066C	DIE DWG.
06	1	BALLCATCH LATCHPLATE	831616	
05	1	BOTTOM RAIL 7"	H32711-B	DIE DWG.
04	2	GLASS STOP EXTR. (HORIZ.)	33212	DIE DWG.
03	2	HORIZ. RAIL CLIP	A28283	
02	2	GLASS GUTTER EXTR. (HORIZ.)	33211	DIE DWG.
01	1	TOP RAIL 2 1/2"	H2979	DIE DWG.

PRODUCT REVISED
as complying with the Florida Building Code
Acceptance No. 02-0313.06
Expiration Date JUNE 1, 2006
By Manuel Perez
Miami Dade Product Control Division

DWG. # WBLT29711(REV. B. 03/02)
WINDBREAKER LT. DOOR SYSTEM
SHT. 4 OF 6 REV. A.
ACTIVE LEAF LHS.
04-30-98

besam®
AUTOMATIC DOOR SYSTEMS
81 TWIN RIVERS DRIVE
HIGHTSTOWN, NJ 08520-5212
TELEPHONE: 609-443-5800.
TELEFAX: 609-443-3440.

POWER-GLIDE AMD-2

WINDBREAKER LT. DOOR SYSTEM
FULL BREAKOUT BI-PARTING SLIDING DOOR.

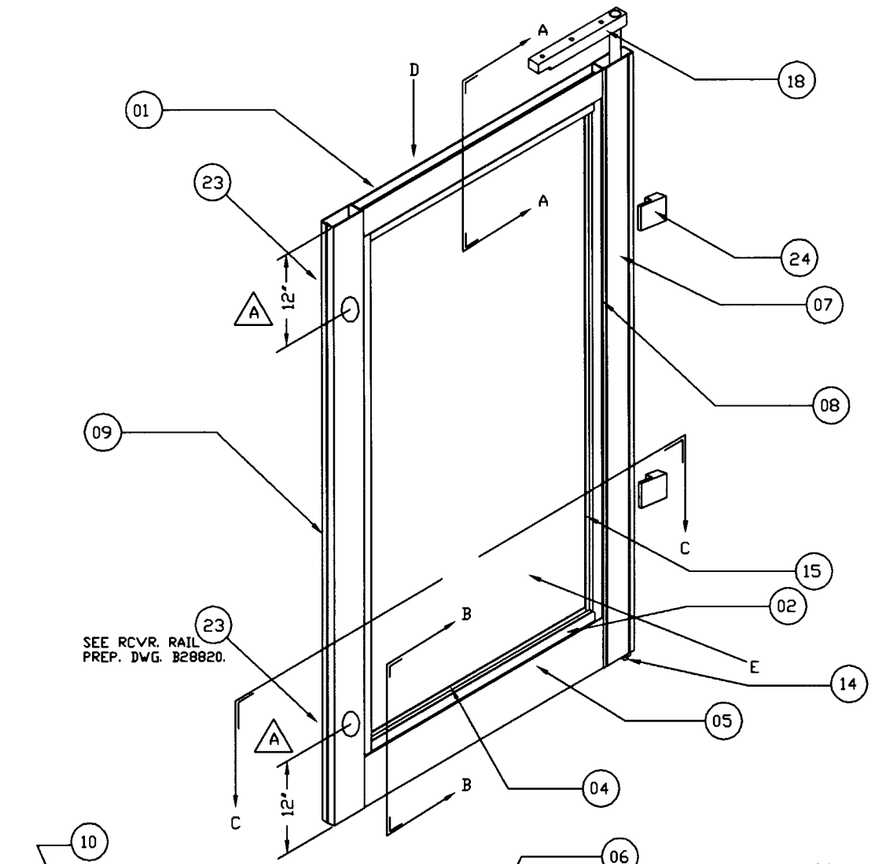

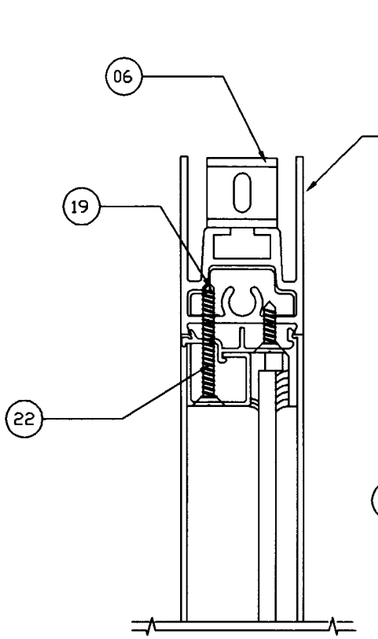

SECTION "A-A"

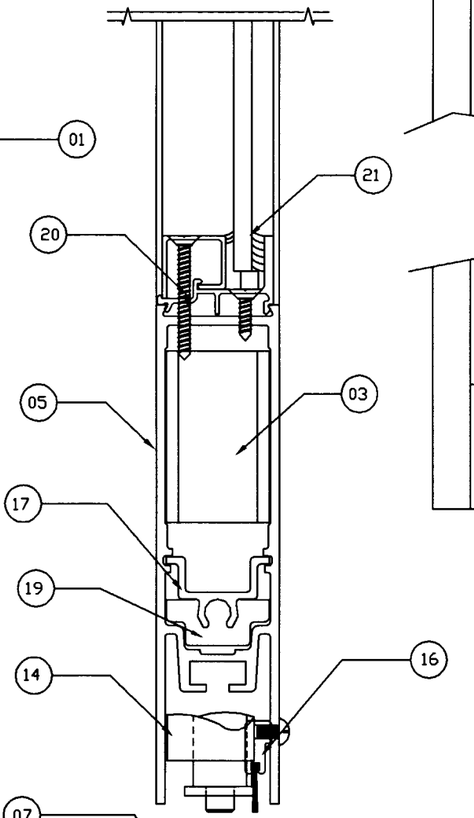

SECTION "B-B"

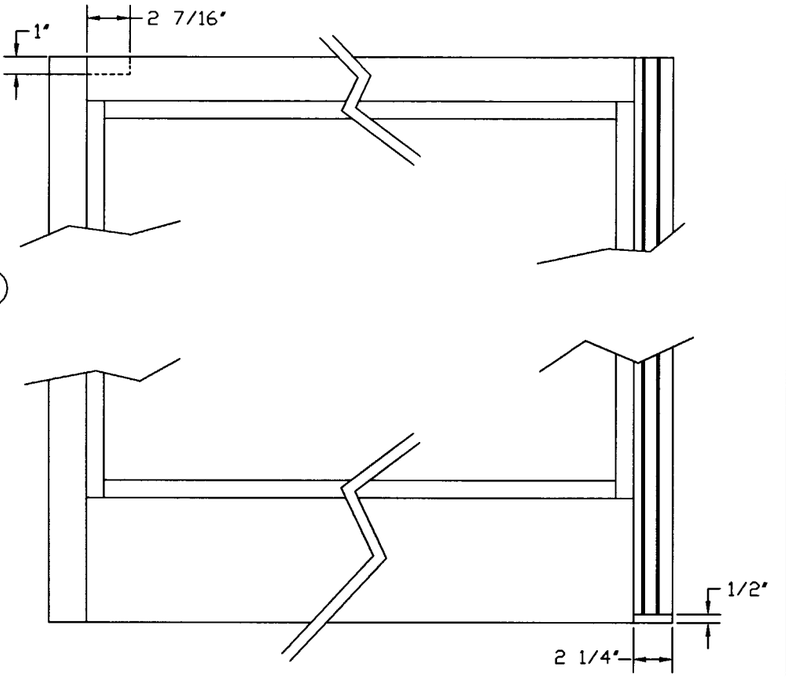

HORIZONTAL PREP FOR GUIDE AND BALLCATCH
VIEW "E"

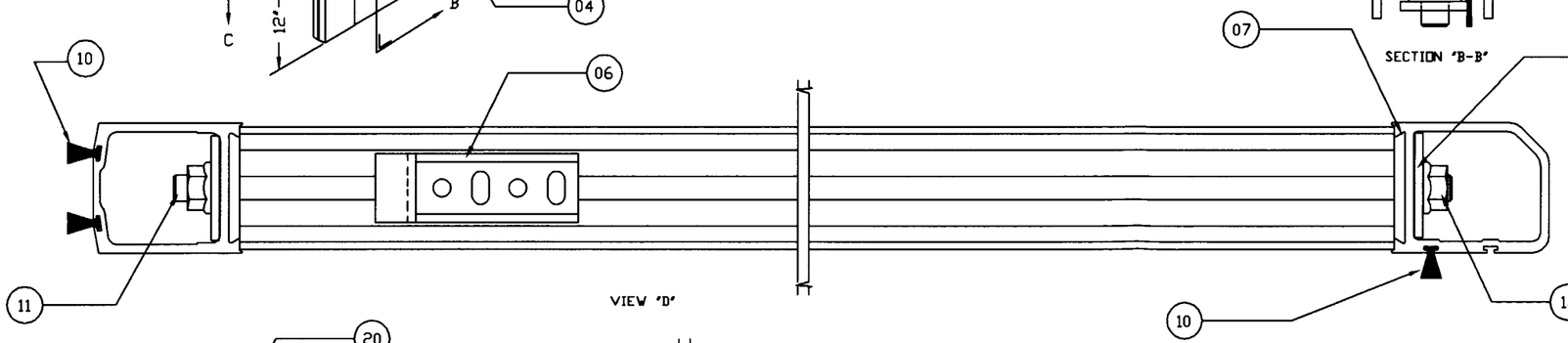

VIEW "D"

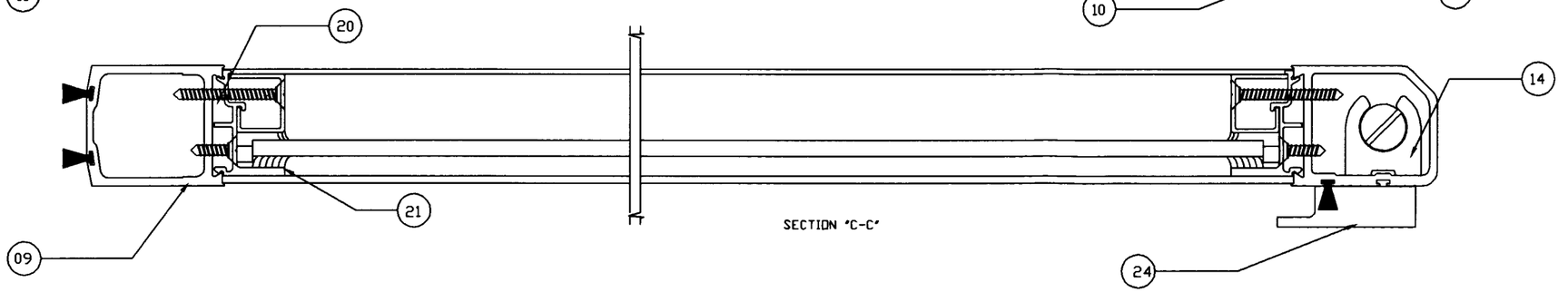

SECTION "C-C"

ITEM#	QTY.	DESCRIPTION	DWG.#	REMARKS
24	2	INTERLOCK W/SHIM KIT	A4-830468	
23	2	2-POINT LOCK SYSTEM	A/R	MS1850/1870 COMBO
22	4	GLASS BLOCK	TPR567	1/4"x1/4"x2"
21	12	STOP SCREW - ST.STL.		#10x2" FHST.
20	12	GUTTER SCREW - ST.STL.		#10x1" FHST.
19	4	CLIP (DOOR RAIL)	B28290	
18	1	PSA (PANIC ARM) ASSY.	A2-831437	
17	1	CONTAINMENT EXTR. (TIE ROD)	32664	DIE DWG.
16	1	DOOR SWEEP KIT	B28375	
15	2	GLASS STOP EXTR. (VERT.)	33212	DIE DWG.
14	1	PIN GUIDE ASSY.	B28237	
13	4	STL. WASHER	A28072	
12	4	3/8 FLANGED NUT		3/8-16TPI.
11	2	TENSION (TIE) ROD 3/8"		3/8-16TPI. STL.
10	3	WEATHERBRUSH PILE		7934-6001-1
09	1	VERTICAL (NOSE) RAIL 2 1/8"	H27064A	DIE DWG.
08	2	GLASS GUTTER EXTR. (VERT.)	33211	DIE DWG.
07	1	VERTICAL (HEEL) RAIL 2 1/4"	27066C	DIE DWG.
06	1	BALLCATCH LATCHPLATE	831616	
05	1	BOTTOM RAIL 7"	H32711-B	DIE DWG.
04	2	GLASS STOP EXTR. (HORIZ.)	33212	DIE DWG.
03	2	HORIZ. RAIL CLIP	A28283	
02	2	GLASS GUTTER EXTR. (HORIZ.)	33211	DIE DWG.
01	1	TOP RAIL 2 1/2"	H2979	DIE DWG.

PRODUCT REVISED
as complying with the Florida Buiding Code
Acceptance No. 02-0313.06
Expiration Date JUNE 11, 2006
By [signature]
Miami Dade Product Control Division

DWG. # WBLT29711 (REV. B. 03/02)
WINDBREAKER LT. DOOR SYSTEM
SHT. 5 OF 6 REV. A.
ACTIVE LEAF RHS.
04-30-98

besam®
AUTOMATIC DOOR SYSTEMS
81 TWIN RIVERS DRIVE
HIGHTSTOWN, NJ 08520-5212
TELEPHONE: 609-443-5800.
TELEFAX: 609-443-3440.

POWER-GLIDE AMD-2

WINDBREAKER LT. DOOR SYSTEM
FULL BREAKOUT BI-PARTING SLIDING DOOR.

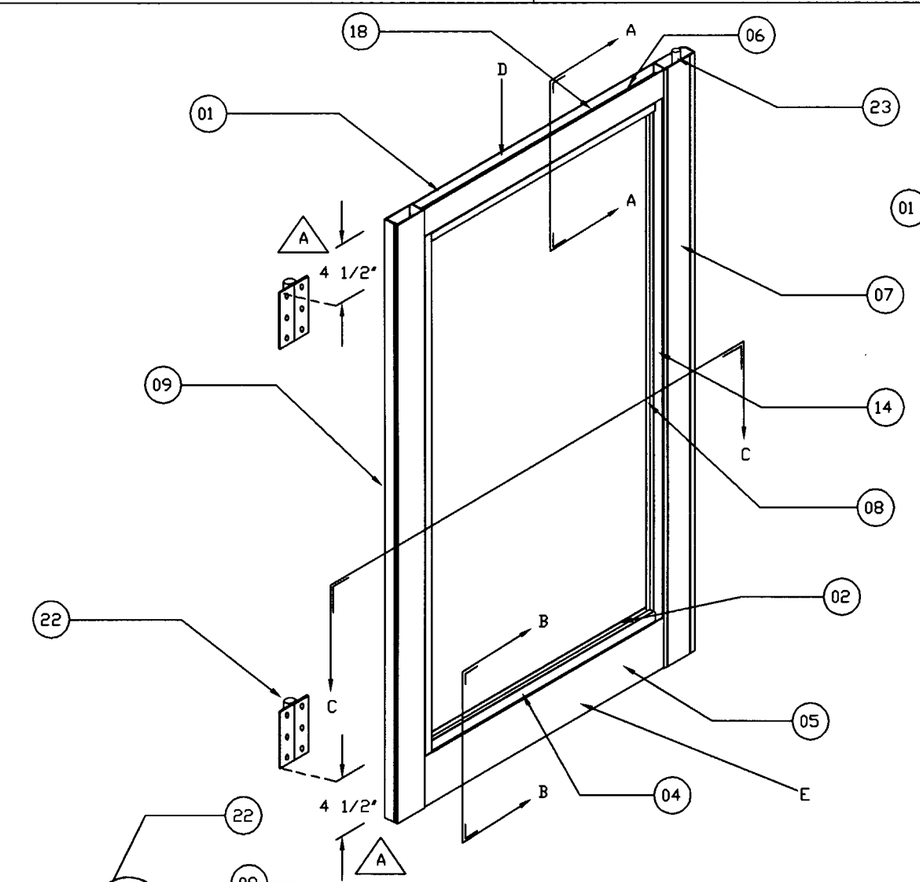

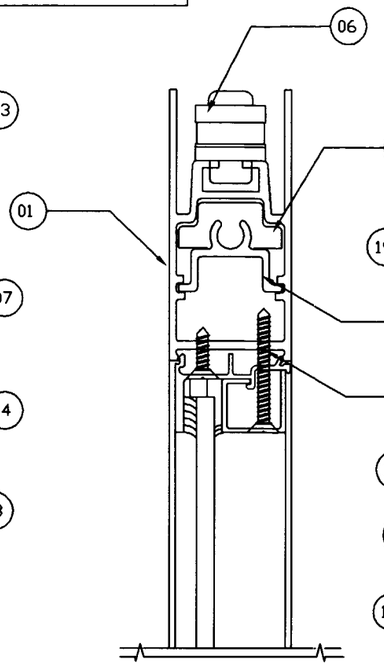

SECTION "A-A"

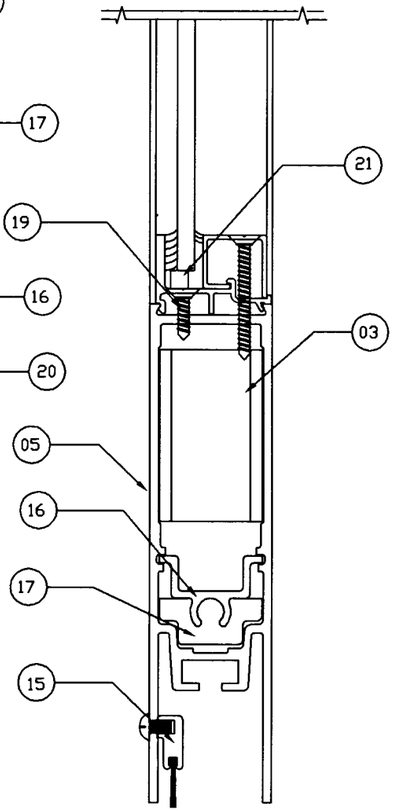

SECTION "B-B"

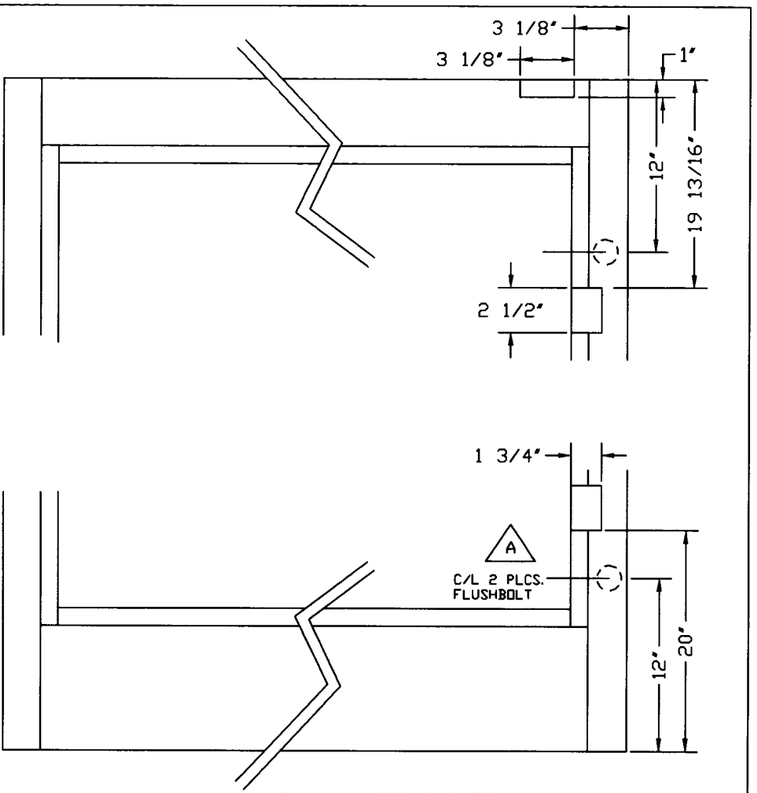

PREP FOR BALL CATCH AND INTERLOCKS
VIEW "E"

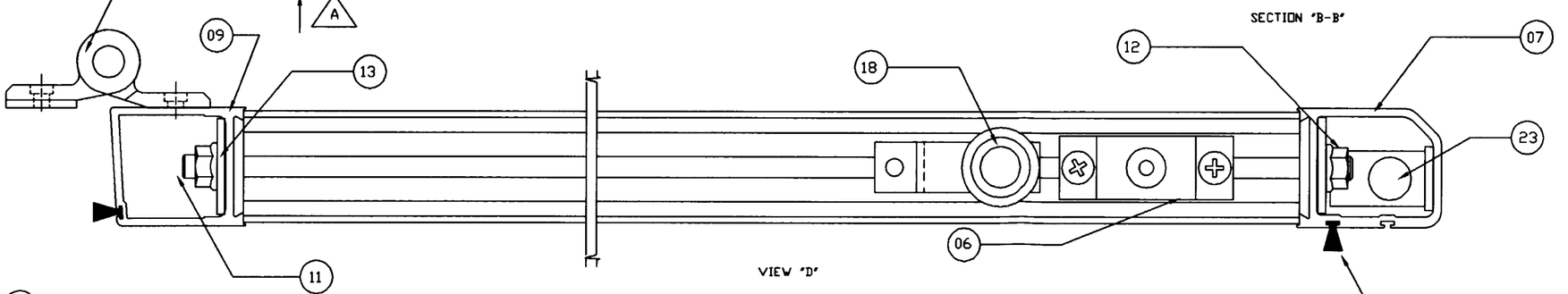

VIEW "D"

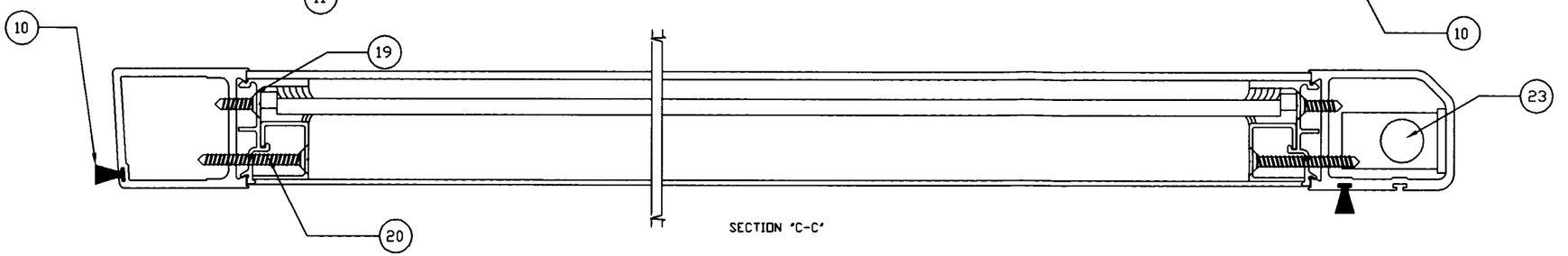

SECTION "C-C"

ITEM#	QTY.	DESCRIPTION	DWG.#	REMARKS
23	2	FLUSH BOLT ASSY	A/R	A/R 1870 SERIES
22	1	H.D. SECURITY HINGE SET	B28647	REF. INSTALL DWG.
21	4	GLASS BLOCK	TPR567	1/4"x1/4"x2"
20	12	STOP SCREW - ST. STL.		#10x2" FHST.
19	12	GUTTER SCREW - ST. STL.		#10x1" FHST.
18	1	BREAK-OUT MAGNET ASSY.	A29036	
17	4	CLIP (DOOR RAIL)	B28290	
16	2	CONTAINMENT EXTR. (TIE ROD)	32664	DIE DWG.
15	1	DOOR SWEEP KIT	B28375	
14	2	GLASS STOP EXTR. (VERT.)	33212	DIE DWG.
13	4	STL. WASHER	A28072	
12	4	3/8 FLANGED NUT		3/8-16TPI.
11	2	TENSION (TIE) ROD 3/8"		3/8-16TPI. STL.
10	2	WEATHERBRUSH PILE		7934-6001-1
09	1	VERTICAL (HEEL) RAIL 2 1/8"	H27065	DIE DWG.
08	2	GLASS GUTTER EXTR. (VERT.)	33211	DIE DWG.
07	1	VERTICAL (NOSE) RAIL 2 1/4"	27066C	DIE DWG.
06	1	BALLCATCH ASSEMBLY	A3 831166	DOOR PORTION
05	1	BOTTOM RAIL 7"	H32711-B	DIE DWG.
04	2	GLASS STOP EXTR. (HORIZ.)	33212	DIE DWG.
03	2	HORIZ. RAIL CLIP	A28283	
02	2	GLASS GUTTER EXTR. (HORIZ.)	33211	DIE DWG.
01	1	TOP RAIL 3 13/16"	H32710	DIE DWG.

DWG. # WBLT29711(REV. B. 03/02)
WINDBREAKER LT. DOOR SYSTEM
SHT. 6 OF 6 REV. A.
SIDELITE RHS.
04-30-98

PRODUCT REVISED
as complying with the Florida Building Code
Acceptance No. 02-0313.06
Expiration Date JUNE 1, 2006
By [signature]
Miami-Dade Product Control Division