MIAMI-DADE

BUILDING CODE COMPLIANCE OFFICE (BCCO)
PRODUCT CONTROL DIVISION

MIAMI-DADE COUNTY, FLORIDA
METRO-DADE FLAGLER BUILDING
140 WEST FLAGLER STREET, SUITE 1603
MIAMI, FLORIDA 33130-1563
(305) 375-2901 FAX (305) 375-2908

# NOTICE OF ACCEPTANCE (NOA)

**PGT Industries**
**1070 Technology Drive**
**Nokomis, FL 34274**

**SCOPE:**
This NOA is being issued under the applicable rules and regulations governing the use of construction materials. The documentation submitted has been reviewed by Miami-Dade County Product Control Division and accepted by the Board of Rules and Appeals (BORA) to be used in Miami Dade County and other areas where allowed by the Authority Having Jurisdiction (AHJ).

This NOA shall not be valid after the expiration date stated below. The Miami-Dade County Product Control Division (In Miami Dade County) and/or the AHJ (in areas other than Miami Dade County) reserve the right to have this product or material tested for quality assurance purposes. If this product or material fails to perform in the accepted manner, the manufacturer will incur the expense of such testing and the AHJ may immediately revoke, modify, or suspend the use of such product or material within their jurisdiction. BORA reserves the right to revoke this acceptance, if it is determined by Miami-Dade County Product Control Division that this product or material fails to meet the requirements of the applicable building code.

This product is approved as described herein, and has been designed to comply with the High Velocity Hurricane Zone of the Florida Building Code.

**DESCRIPTION: Series HR-201 Aluminum Horizontal Sliding Window with Heavy Duty Meeting Rail**

**APPROVAL DOCUMENT:** Drawing No. 268-2, titled "Alum. Horiz. Roller (HD. MTG. Rail)", sheets 1 through 9, prepared, signed and sealed by Robert Clark, P.E. dated 5/10/02, bearing the Miami-Dade County Product Control Approval stamp with the Notice of Acceptance number and approval date by the Miami-Dade County Product Control Division.

**MISSILE IMPACT RATING: None**

**LABELING:** Each unit shall bear a permanent label with the manufacturer's name or logo, city, state and following statement: "Miami-Dade County Product Control Approved", unless otherwise noted herein.

**RENEWAL** of this NOA shall be considered after a renewal application has been filed and there has been no change in the applicable building code negatively affecting the performance of this product.

**TERMINATION** of this NOA will occur after the expiration date or if there has been a revision or change in the materials, use, and/or manufacture of the product or process. Misuse of this NOA as an endorsement of any product, for sales, advertising or any other purposes shall automatically terminate this NOA. Failure to comply with any section of this NOA shall be cause for termination and removal of NOA.

**ADVERTISEMENT:** The NOA number preceded by the words Miami-Dade County, Florida, and followed by the expiration date may be displayed in advertising literature. If any portion of the NOA is displayed, then it shall be done in its entirety.

**INSPECTION:** A copy of this entire NOA shall be provided to the user by the manufacturer or its distributors and shall be available for inspection at the job site at the request of the Building Official.

The submitted documentation was reviewed by **Raul Rodriguez**

PRODUCT CONTROL ACCEPTED

## COMPARATIVE ANALYSIS - TABLE 1. △

GLASS TYPE: A. 3/16" ANNEALED (FTL-3331) C. 1/2" I.G. - 3/16A,3/16S,1/8A (FTL-3332)
B. 3/16" TEMPERED (FTL-3330)

| WINDOW WIDTH | | WINDOW HEIGHT | | | | | | | | | | | |
|---|---|---|---|---|---|---|---|---|---|---|---|---|---|
| | | 26.000 (2) | | 38.375 (3) | | 44.000 (3) | | 50.625 (4) | | 63.000 (4) | | 72.000 (5) | |
| | | NEG | POS | NEG | POS | NEG | POS | NEG | POS | NEG | POS | NEG | POS |
| 26.500 (4) | A. | -120.0 | 56.0 | -120.0 | 56.0 | -120.0 | 56.0 | -120.0 | 56.0 | -119.3 | 56.0 | -102.8 | 56.0 |
| | B. | -135.0 | 56.0 | -135.0 | 56.0 | -135.0 | 56.0 | -135.0 | 56.0 | -119.3 | 56.0 | -102.8 | 56.0 |
| | C. | -120.0 | 56.0 | -120.0 | 56.0 | -120.0 | 56.0 | -120.0 | 56.0 | -106.0 | 56.0 | -91.4 | 56.0 |
| 37.000 (4) | A. | -120.0 | 56.0 | -120.0 | 56.0 | -119.5 | 56.0 | -109.1 | 56.0 | -89.6 | 56.0 | -76.7 | 56.0 |
| | B. | -135.0 | 56.0 | -135.0 | 56.0 | -135.0 | 56.0 | -116.4 | 56.0 | -89.6 | 56.0 | -76.7 | 56.0 |
| | C. | -120.0 | 56.0 | -120.0 | 56.0 | -119.5 | 56.0 | -103.4 | 56.0 | -79.6 | 56.0 | -68.2 | 56.0 |
| 44.000 (4) | A. | -120.0 | 56.0 | -101.6 | 56.0 | -89.8 | 56.0 | -79.7 | 56.0 | -68.9 | 56.0 | -65.5 | 56.0 |
| | B. | -127.3 | 56.0 | -127.3 | 56.0 | -122.7 | 56.0 | -102.2 | 56.0 | -77.9 | 56.0 | -66.4 | 56.0 |
| | C. | -113.1 | 56.0 | -101.6 | 56.0 | -89.8 | 56.0 | -79.7 | 56.0 | -68.9 | 56.0 | -59.0 | 56.0 |
| 53.125 (4) | A. | -87.4 | 56.0 | -81.4 | 56.0 | -70.5 | 56.0 | -59.1 | 56.0 | -48.5 | 48.5 | -44.5 | 44.5 |
| | B. | -87.4 | 56.0 | -87.3 | 56.0 | -87.3 | 56.0 | -87.3 | 56.0 | -67.4 | 56.0 | -57.1 | 56.0 |
| | C. | -77.6 | 56.0 | -77.6 | 56.0 | -70.5 | 56.0 | -59.1 | 56.0 | -48.5 | 48.5 | -44.5 | 44.5 |
| 63.000 (6) | A. | -64.0 | 56.0 | -62.1 | 56.0 | -60.8 | 56.0 | -51.8 | 51.8 | -39.5 | 39.5 | -34.7 | 34.7 |
| | B. | -64.0 | 56.0 | -62.1 | 56.0 | -62.1 | 56.0 | -62.1 | 56.0 | -59.8 | 56.0 | -50.3 | 50.3 |
| | C. | -56.9 | 56.0 | -55.2 | 55.2 | -55.2 | 55.2 | -51.8 | 51.8 | -39.5 | 39.5 | -34.7 | 34.7 |
| 74.000 (6) | A. | -49.4 | 49.4 | -45.0 | 45.0 | -45.0 | 45.0 | -45.0 | 45.0 | -36.7 | 36.7 | -31.0 | 31.0 |
| | B. | -49.4 | 49.4 | -45.0 | 45.0 | -45.0 | 45.0 | -45.0 | 45.0 | -45.0 | 45.0 | -45.0 | 45.0 |
| | C. | -43.9 | 43.9 | -40.0 | 40.0 | -40.0 | 40.0 | -40.0 | 40.0 | -36.7 | 36.7 | -31.0 | 31.0 |

TABLE NOTE: NUMBERS IN ( ) PARENTHESES ARE MINIMUM QUANTITY OF ANCHORS PER SIDE.

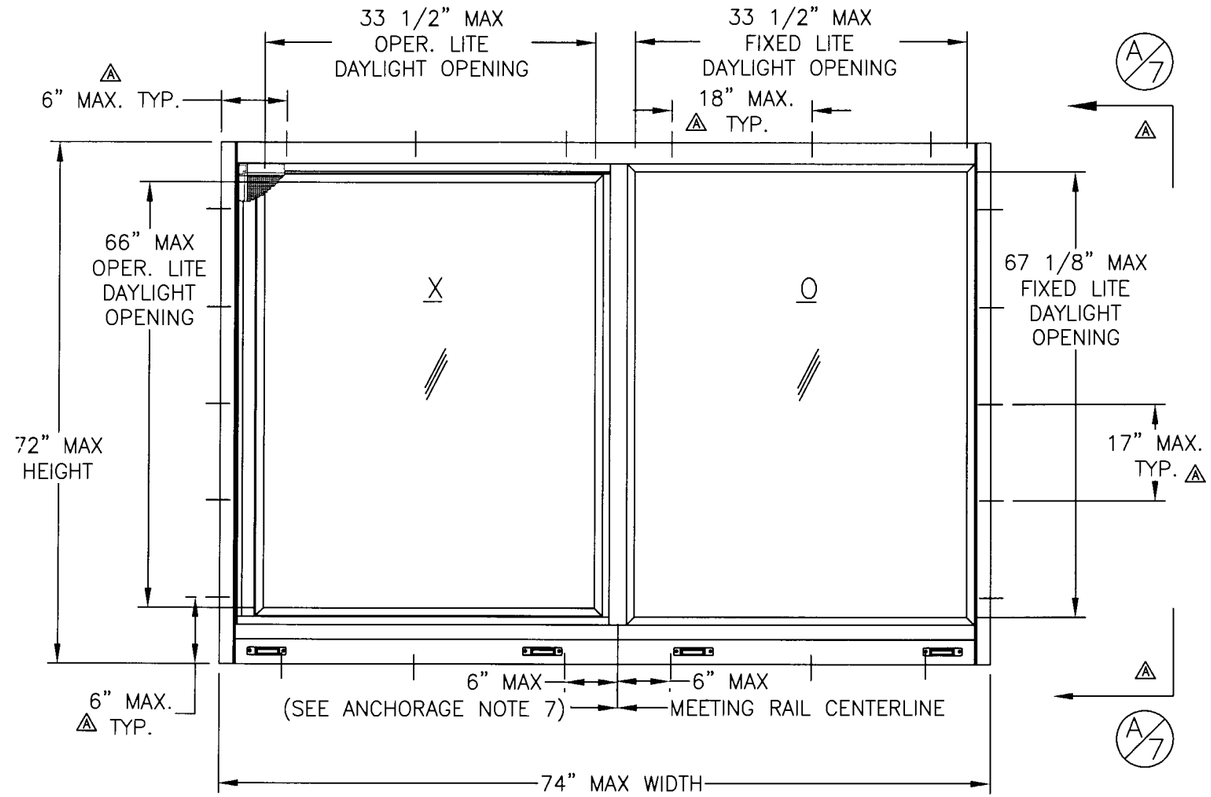


OUTSIDE – SEE SHEET 2 FOR SECTION DETAILS

## NON–IMPACT WINDOW NOTES:

1. GLAZING: 3/16" ANNEALED, 3/16" TEMPERED, 1/2" IG (3/16A,3/16S,1/8A)
2. DESIGN PRESSURE RATING: SEE TABLE 1.
   A. NEGATIVE DESIGN LOADS BASED ON TESTED PRESSURE AND GLASS TABLES ASTM E 1300–98.
   B. POSITIVE DESIGN LOADS BASED ON WATER TEST PRESSURE AND GLASS TABLES ASTM E 1300–98.
3. CONFIGURATIONS: OX, XO
4. REFERENCE TEST REPORTS: FTL–3330, FTL3331 & FTL–3332
5. SHUTTER REQUIREMENT: MIAMI–DADE COUNTY APPROVED SHUTTERS ARE REQUIRED.
6. NARROW JOINT SEAM SEALANT IS USED ON ALL CORNERS AND AT EACH FIXED MEETING RAIL.
7. ANCHORAGE:
   SINGLE ROW OF FASTENERS LOCATED AS FOLLOWS AND PER SHEET 9.
   HEAD & SILL:
   MAX. 6" FROM CORNERS.
   MAX. 6" ON EACH SIDE OF MEETING RAIL CENTERLINE.
   MAX. 18" SPACING.
   JAMBS:
   MAX. 6" FROM CORNERS.
   MAX. 17" SPACING.
8. SEE SHEET 2 FOR GLAZING DETAILS.
9. PRESSURES UNDER 40 P.S.F. NOT APPLICABLE IN MIAMI–DADE COUNTY.
10. SEE SHEET 7 FOR CORNER CONSTRUCTION INFORMATION. △

Approved as complying with the Florida Building Code
Date June 27, 2002
NOA# 02-0313.09
Miami Dade Product Control Division
By

5/10/02


Robert L. Clark, P.E.
PE #39712
Structural


PGT INDUSTRIES


1070 TECHNOLOGY DRIVE
NOKOMIS, FL 34275

P.O. BOX 1529
NOKOMIS, FL 34274


| Revsd By: | Date: | Revisions: |
|---|---|---|
| Revsd By: FK | Date: 4/23/02 | Revisions: ADD ANCHOR DIM. |
| Drawn By: F.K. | Date: 1/23/02 | |

Description: OX, XO ELEVATION, 74Wx72H

Title: ALUM. HORIZ. ROLLER (HD. MTG. RAIL)

| Series/Model: | Scale: | Sheet: | Drawing No. | Rev: |
|---|---|---|---|---|
| HR–201 | NTS | 1 of 9 | 268–2 | A |

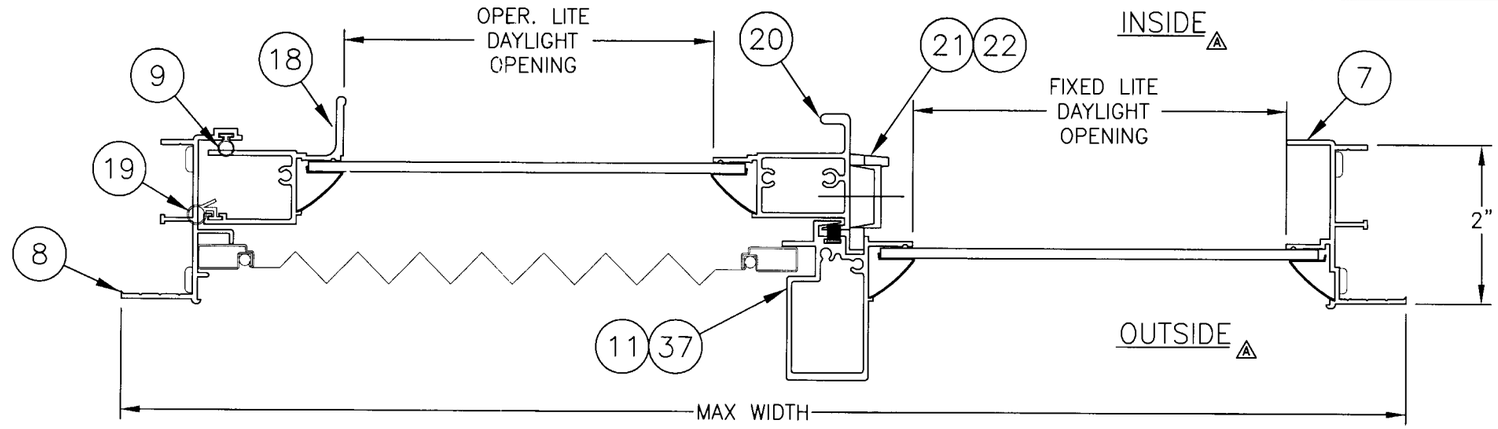


HORIZONTAL SECTION

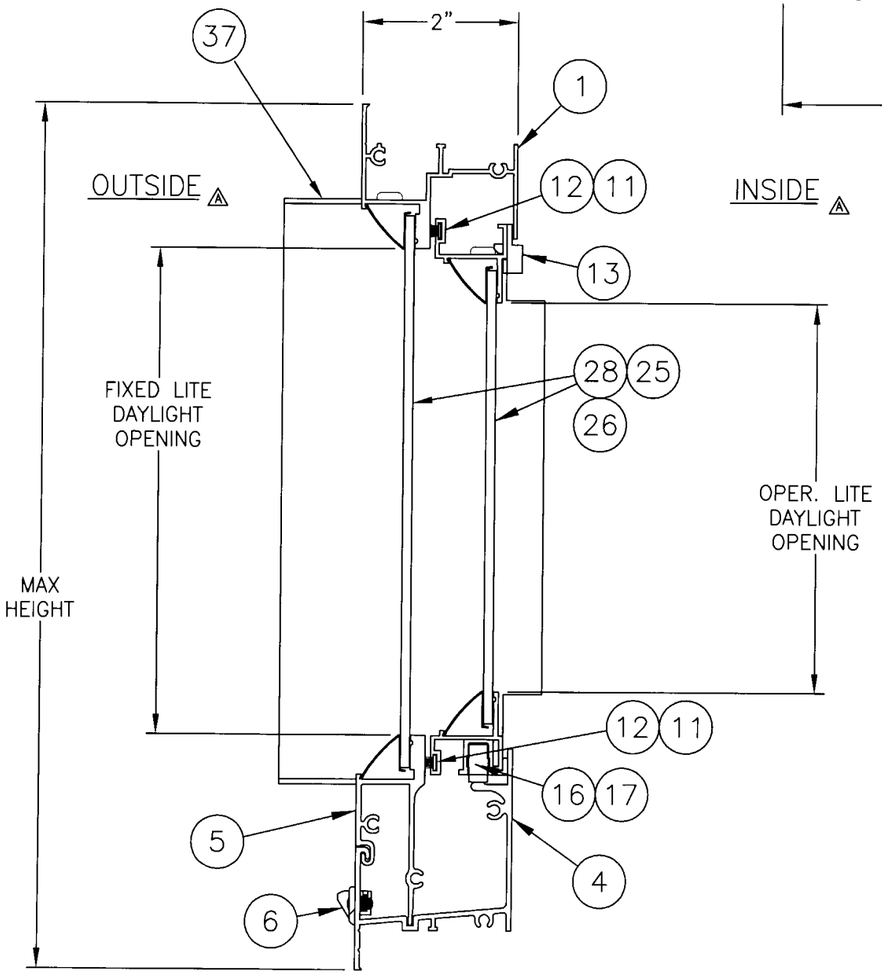


VERTICAL SECTION

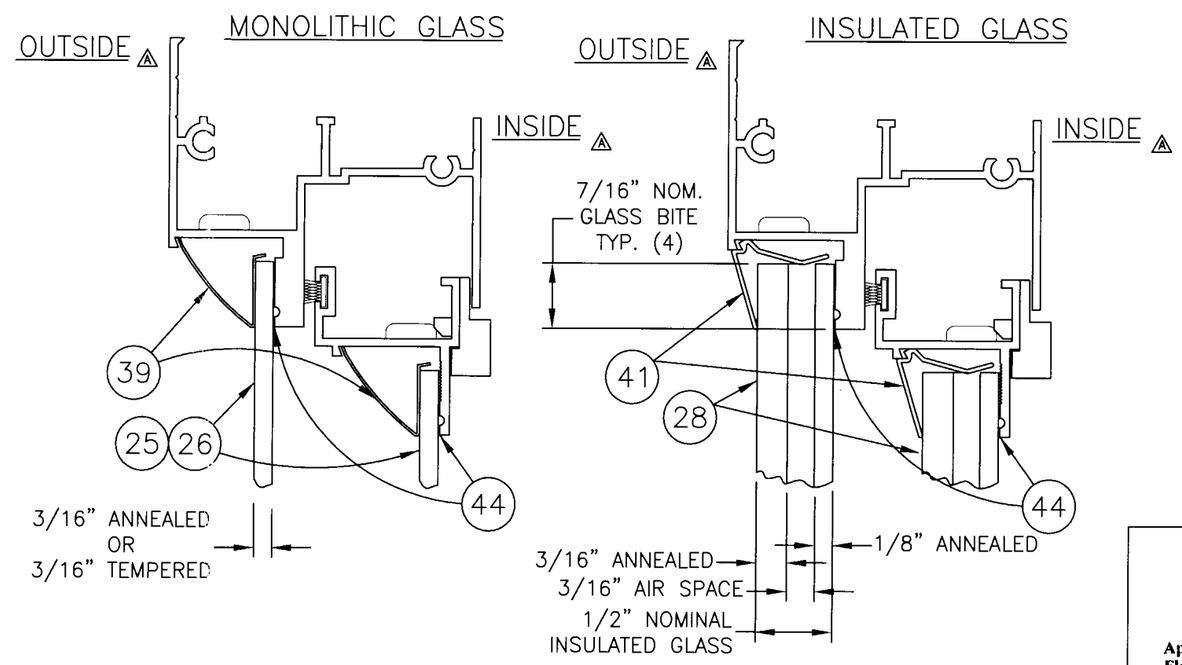


GLAZING DETAILS

TEST REPORTS:
FTL-3330
FTL-3331
FTL-3332

Approved as complying with the Florida Buiding Code
Date June 27, 2002
NOA# 02-0213.09
Miami Dade Product Control Division
By

5/10/02

Robert L. Clark, P.E.
PE #39712
Structural

PGT INDUSTRIES

1070 TECHNOLOGY DRIVE
NOKOMIS, FL 34275

P.O. BOX 1529
NOKOMIS, FL 34274

| Revsd By: | Date: | Revisions: |
|---|---|---|
| Revsd By: FK | Date: 4/23/02 | Revisions: ADD INT/EXT DESIG. |
| Drawn By: F.K. | Date: 1/23/02 | |

Description: OX, XO SECTIONS & GLAZING, 74Wx72H

Title: ALUM. HORIZ. ROLLER (HD. MTG. RAIL)

| Series/Model: | Scale: | Sheet: | Drawing No. | Rev: |
|---|---|---|---|---|
| HR-201 | NTS | 2 of 9 | 268-2 | A |

## COMPARATIVE ANALYSIS - TABLE 2. ⚠

GLASS TYPE: A. 3/16" ANNEALED (FTL-3334)
B. 3/16" TEMPERED (FTL-3333)

| WINDOW WIDTH | | WINDOW HEIGHT 26.000 (2) NEG | 26.000 (2) POS | 38.375 (3) NEG | 38.375 (3) POS | 44.000 (3) NEG | 44.000 (3) POS | 50.625 (4) NEG | 50.625 (4) POS | 63.000 (4) NEG | 63.000 (4) POS |
|---|---|---|---|---|---|---|---|---|---|---|---|
| 26.500 (4) | A. | -120.0 | 56.0 | -120.0 | 56.0 | -120.0 | 56.0 | -120.0 | 56.0 | -110.2 | 56.0 |
| | B. | -135.0 | 56.0 | -135.0 | 56.0 | -135.0 | 56.0 | -135.0 | 56.0 | -132.3 | 56.0 |
| 37.000 (4) | A. | -120.0 | 56.0 | -120.0 | 56.0 | -119.5 | 56.0 | -107.6 | 56.0 | -82.8 | 56.0 |
| | B. | -135.0 | 56.0 | -135.0 | 56.0 | -135.0 | 56.0 | -129.1 | 56.0 | -99.3 | 56.0 |
| 44.000 (4) | A. | -120.0 | 56.0 | -101.6 | 56.0 | -89.8 | 56.0 | -79.7 | 56.0 | -68.9 | 56.0 |
| | B. | -135.0 | 56.0 | -135.0 | 56.0 | -135.0 | 56.0 | -113.3 | 56.0 | -86.4 | 56.0 |
| 53.125 (4) | A. | -97.1 | 56.0 | -81.4 | 56.0 | -70.5 | 56.0 | -59.1 | 56.0 | -48.5 | 48.5 |
| | B. | -116.5 | 56.0 | -116.4 | 56.0 | -116.4 | 56.0 | -99.6 | 56.0 | -74.8 | 56.0 |
| 63.000 (4) | A. | -71.2 | 56.0 | -69.0 | 56.0 | -60.8 | 56.0 | -51.8 | 51.8 | -39.5 | 39.5 |
| | B. | -85.4 | 56.0 | -82.8 | 56.0 | -82.8 | 56.0 | -82.8 | 56.0 | -66.4 | 56.0 |
| 74.000 (4) | A. | -54.8 | 49.4 | -50.0 | 45.0 | -50.0 | 45.0 | -46.9 | 45.0 | -36.7 | 36.7 |
| | B. | -65.8 | 56.0 | -60.0 | 55.0 | -60.0 | 55.0 | -60.0 | 55.0 | -60.0 | 55.0 |

TABLE NOTE: NUMBERS IN ( ) PARENTHESES ARE MINIMUM QUANTITY OF ANCHORS PER SIDE.

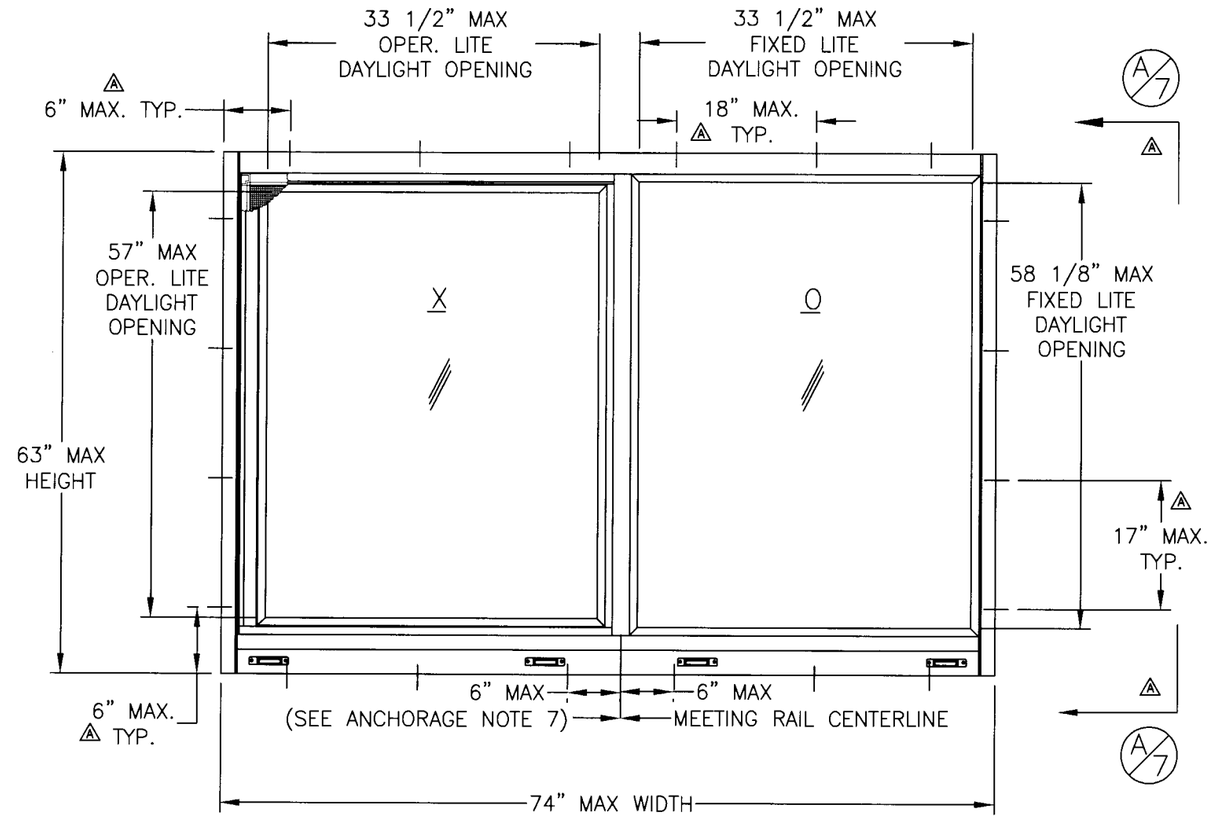


OUTSIDE – SEE SHEET 4 FOR SECTION DETAILS

## NON–IMPACT WINDOW NOTES:

1. GLAZING: 3/16" ANNEALED, 3/16" TEMPERED
2. DESIGN PRESSURE RATING: SEE TABLE 2.
   A. NEGATIVE DESIGN LOADS BASED ON TESTED PRESSURE AND GLASS TABLES ASTM E 1300–98.
   B. POSITIVE DESIGN LOADS BASED ON WATER TEST PRESSURE AND GLASS TABLES ASTM E 1300–98.
3. CONFIGURATIONS: OX, XO
4. REFERENCE TEST REPORTS: FTL–3333 & FTL–3334
5. SHUTTER REQUIREMENT: MIAMI–DADE COUNTY APPROVED SHUTTERS ARE REQUIRED.
6. NARROW JOINT SEAM SEALANT IS USED ON ALL CORNERS AND AT EACH FIXED MEETING RAIL.
7. ANCHORAGE:
   SINGLE ROW OF FASTENERS LOCATED AS FOLLOWS AND PER SHEET 9.
   HEAD & SILL:
   MAX. 6" FROM CORNERS.
   MAX. 6" ON EACH SIDE OF MEETING RAIL CENTERLINE.
   MAX. 18" SPACING.
   JAMBS:
   MAX. 6" FROM CORNERS.
   MAX. 17" SPACING.
8. SEE SHEET 4 FOR GLAZING DETAILS.
9. PRESSURES UNDER 40 P.S.F. NOT APPLICABLE IN MIAMI–DADE COUNTY.
10. SEE SHEET 7 FOR CORNER CONSTRUCTION INFORMATION. ⚠

Approved as complying with the Florida Buiding Code
Date June 27, 2002
NOA# 02-0313.09
Miami Dade Product Control Division
By

D L Clark
5/16/02

Robert L. Clark, P.E.
PE #39712
Structural

PGT INDUSTRIES

1070 TECHNOLOGY DRIVE
NOKOMIS, FL 34275

P.O. BOX 1529
NOKOMIS, FL 34274

| Revsd By: | Date: | Revisions: |
|---|---|---|
| Revsd By: FK | Date: 4/23/02 | Revisions: ADD ANCHOR DIM. |
| Drawn By: F.K. | Date: 1/23/02 | |

Description: OX, XO ELEVATION, 74Wx63H

Title: ALUM. HORIZ. ROLLER (HD. MTG. RAIL)

| Series/Model: | Scale: | Sheet: | Drawing No. | Rev: |
|---|---|---|---|---|
| HR–201 | NTS | 3 of 9 | 268–2 | A |

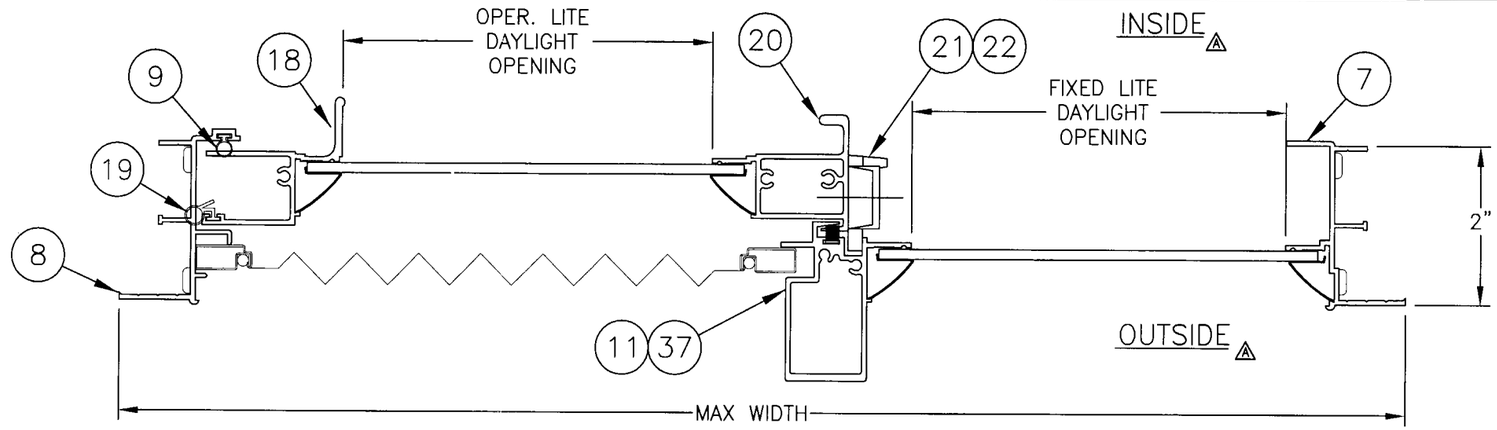


HORIZONTAL SECTION

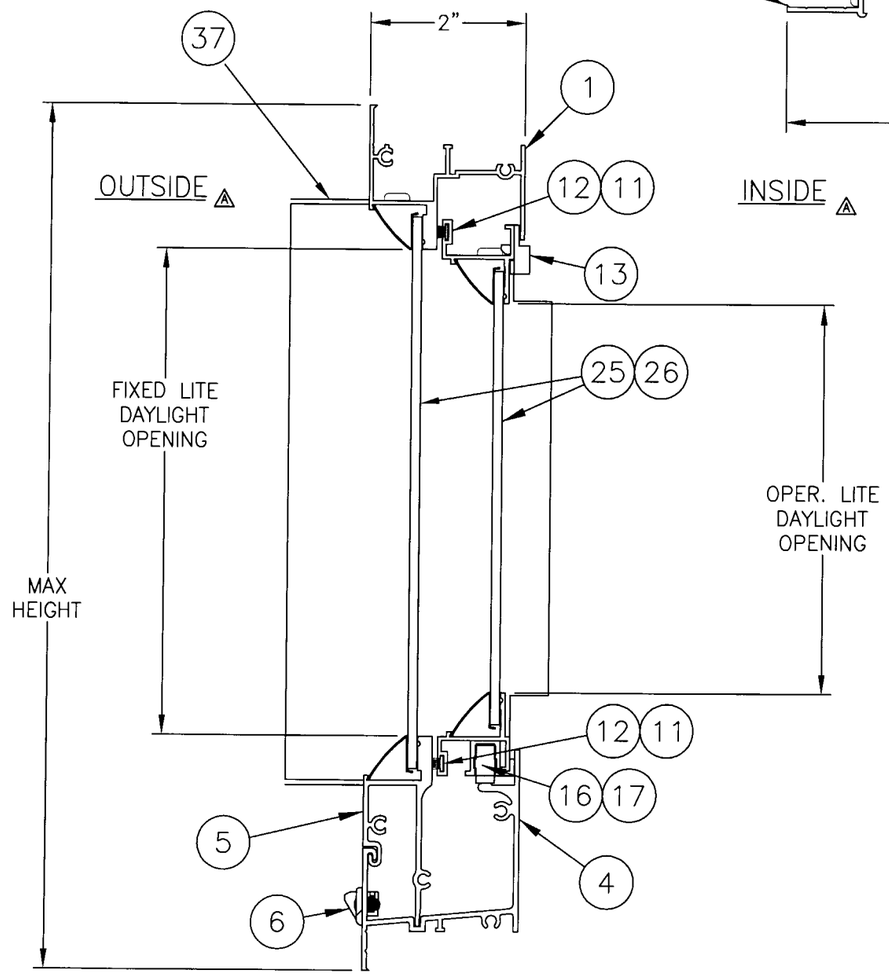


VERTICAL SECTION

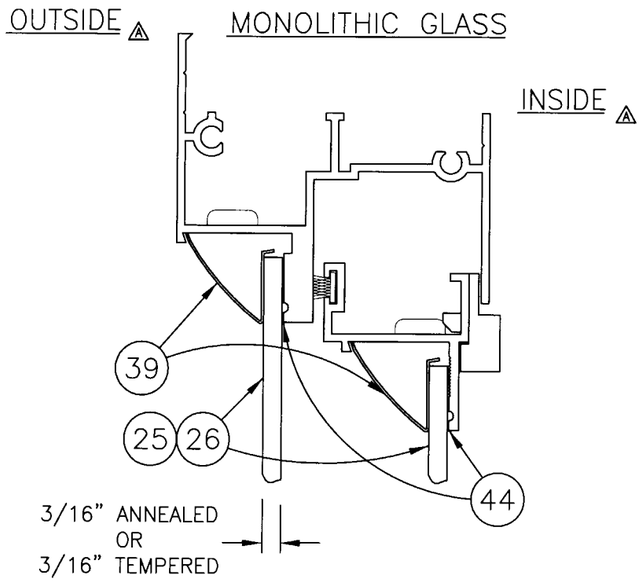


GLAZING DETAIL

Approved as complying with the Florida Buiding Code
Date June 27, 2002
NOA# 02-0313.09
Miami Dade Product Control Division
By

TEST REPORTS:
FTL-3333
FTL-3334

5/14/02
Robert L. Clark, P.E.
PE #39712
Structural

PGT INDUSTRIES

1070 TECHNOLOGY DRIVE
NOKOMIS, FL 34275

P.O. BOX 1529
NOKOMIS, FL 34274

| Revsd By: | Date: | Revisions: |
|---|---|---|
| | | |
| Revsd By: FK | Date: 4/23/02 | Revisions: ADD INT/EXT DESIG. |
| Drawn By: F.K. | Date: 1/23/02 | |

Description: OX, XO SECTIONS & GLAZING, 74Wx63H

Title: ALUM. HORIZ. ROLLER (HD. MTG. RAIL)

| Series/Model: | Scale: | Sheet: | Drawing No. | Rev: |
|---|---|---|---|---|
| HR-201 | NTS | 4 of 9 | 268-2 | A |

## COMPARATIVE ANALYSIS - TABLE 3. ⚠

GLASS TYPE: A. 3/16" ANNEALED (FTL-3328) C. 1/2" I.G. - 3/16A,3/16S,1/8A (FTL-3329)
B. 3/16" TEMPERED (FTL-3327)

| WINDOW WIDTH | | WINDOW HEIGHT 26.000 (2) NEG | 26.000 (2) POS | 38.375 (3) NEG | 38.375 (3) POS | 44.000 (3) NEG | 44.000 (3) POS | 50.625 (4) NEG | 50.625 (4) POS | 63.000 (4) NEG | 63.000 (4) POS |
|---|---|---|---|---|---|---|---|---|---|---|---|
| 53.125 (6) | A. | -135.0 | 56.0 | -84.5 | 56.0 | -73.0 | 56.0 | -61.2 | 56.0 | -82.6 | 56.0 |
| | B. | -135.0 | 56.0 | -135.0 | 56.0 | -130.3 | 56.0 | -108.5 | 56.0 | -82.6 | 56.0 |
| | C. | -135.0 | 56.0 | -84.5 | 56.0 | -73.0 | 56.0 | -61.2 | 56.0 | -61.2 | 56.0 |
| 74.000 (7) | A. | -92.9 | 56.0 | -64.6 | 56.0 | -56.2 | 56.0 | -48.3 | 48.3 | -37.4 | 37.4 |
| | B. | -131.5 | 56.0 | -131.5 | 56.0 | -107.8 | 56.0 | -87.5 | 56.0 | -64.8 | 56.0 |
| | C. | -92.9 | 56.0 | -64.6 | 56.0 | -56.2 | 56.0 | -48.3 | 48.3 | -37.4 | 37.4 |
| 90.000 (7) | A. | -79.4 | 56.0 | -52.4 | 52.4 | -48.4 | 48.4 | -43.3 | 43.3 | -34.9 | 34.9 |
| | B. | -88.9 | 56.0 | -88.9 | 56.0 | -88.9 | 56.0 | -79.5 | 56.0 | -57.3 | 51.5 |
| | C. | -79.4 | 56.0 | -52.4 | 52.4 | -48.4 | 48.4 | -43.3 | 43.3 | -34.9 | 34.9 |
| 106.375 (8) | A. | -63.7 | 56.0 | -43.8 | 43.8 | -40.8 | 40.8 | -38.0 | 38.0 | -31.5 | 31.5 |
| | B. | -63.7 | 56.0 | -63.6 | 56.0 | -63.6 | 56.0 | -63.6 | 56.0 | -52.5 | 47.2 |
| | C. | -57.3 | 50.9 | -43.8 | 43.8 | -40.8 | 40.8 | -38.0 | 38.0 | -31.5 | 31.5 |
| 111.000 (8) | A. | -58.7 | 52.8 | -42.0 | 42.0 | -39.4 | 39.4 | -36.5 | 36.5 | -30.6 | 30.6 |
| | B. | -58.7 | 52.8 | -58.4 | 52.6 | -58.4 | 52.6 | -58.4 | 52.6 | -51.5 | 46.4 |
| | C. | -52.8 | 46.9 | -42.0 | 42.0 | -39.4 | 39.4 | -36.5 | 36.5 | -30.6 | 30.6 |
| 120.000 (8) | A. | -50.9 | 45.8 | -38.2 | 38.2 | -36.6 | 36.6 | -33.8 | 33.8 | -29.2 | 29.2 |
| | B. | -50.9 | 45.8 | -50.0 | 45.0 | -50.0 | 45.0 | -50.0 | 45.0 | -50.0 | 45.0 |
| | C. | -45.8 | 40.7 | -38.2 | 38.2 | -36.6 | 36.6 | -33.8 | 33.8 | -29.2 | 29.2 |

TABLE NOTE: NUMBERS IN ( ) PARENTHESES ARE MINIMUM QUANTITY OF ANCHORS PER SIDE.

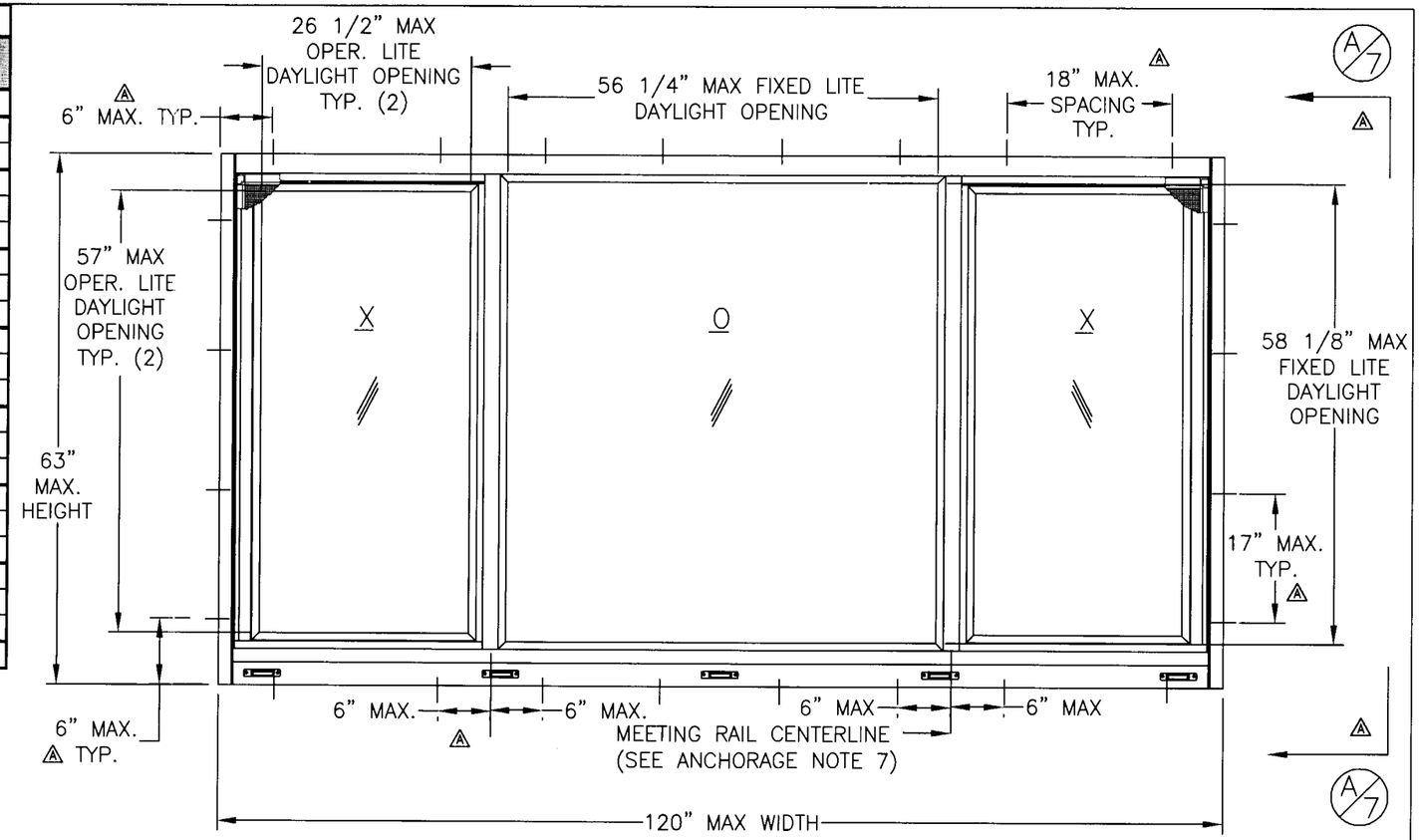


OUTSIDE – SEE SHEET 6 FOR SECTION DETAILS

## NON–IMPACT WINDOW NOTES:

1. GLAZING: 3/16" ANNEALED, 3/16" TEMPERED, 1/2" IG (3/16A,3/16S,1/8A)
2. DESIGN PRESSURE RATING: SEE TABLE 3.
   A. NEGATIVE DESIGN LOADS BASED ON TESTED PRESSURE AND GLASS TABLES ASTM E 1300–98.
   B. POSITIVE DESIGN LOADS BASED ON WATER TEST PRESSURE AND GLASS TABLES ASTM E 1300–98.
3. CONFIGURATIONS: XOX
4. REFERENCE TEST REPORTS: FTL–3327, FTL–3328 & FTL–3329
5. SHUTTER REQUIREMENT: MIAMI–DADE COUNTY APPROVED SHUTTERS ARE REQUIRED.
6. NARROW JOINT SEAM SEALANT IS USED ON ALL CORNERS AND AT EACH FIXED MEETING RAIL.
7. ANCHORAGE:
   SINGLE ROW OF FASTENERS LOCATED AS FOLLOWS AND PER SHEET 9.
   HEAD & SILL:
   MAX. 6" FROM CORNERS.
   MAX. 6" ON EACH SIDE OF MEETING RAIL CENTERLINE.
   MAX. 18" SPACING.
   JAMBS:
   MAX. 6" FROM CORNERS.
   MAX. 17" SPACING.
8. SEE SHEET 6 FOR GLAZING DETAILS.
9. PRESSURES UNDER 40 P.S.F. NOT APPLICABLE IN MIAMI–DADE COUNTY.
10. SEE SHEET 7 FOR CORNER CONSTRUCTION INFORMATION. ⚠

Approved as complying with the Florida Buiding Code
Date June 27, 2002
NOA# 02-0313.05
Miami Dade Product Control Division
By

5/16/02

Robert L. Clark, P.E.
PE #39712
Structural

PGT INDUSTRIES

1070 TECHNOLOGY DRIVE
NOKOMIS, FL 34275

P.O. BOX 1529
NOKOMIS, FL 34274

| Revsd By: | Date: | Revisions: |
|---|---|---|
| | | |
| Revsd By: FK | Date: 4/23/02 | Revisions: ADD ANCHOR DIM. |
| Drawn By: F.K. | Date: 1/23/02 | |

Description: XOX ELEVATION, 120Wx63H

Title: ALUM. HORIZ. ROLLER (HD. MTG. RAIL)

| Series/Model: | Scale: | Sheet: | Drawing No. | Rev: |
|---|---|---|---|---|
| HR–201 | NTS | 5 of 9 | 268–2 | A |

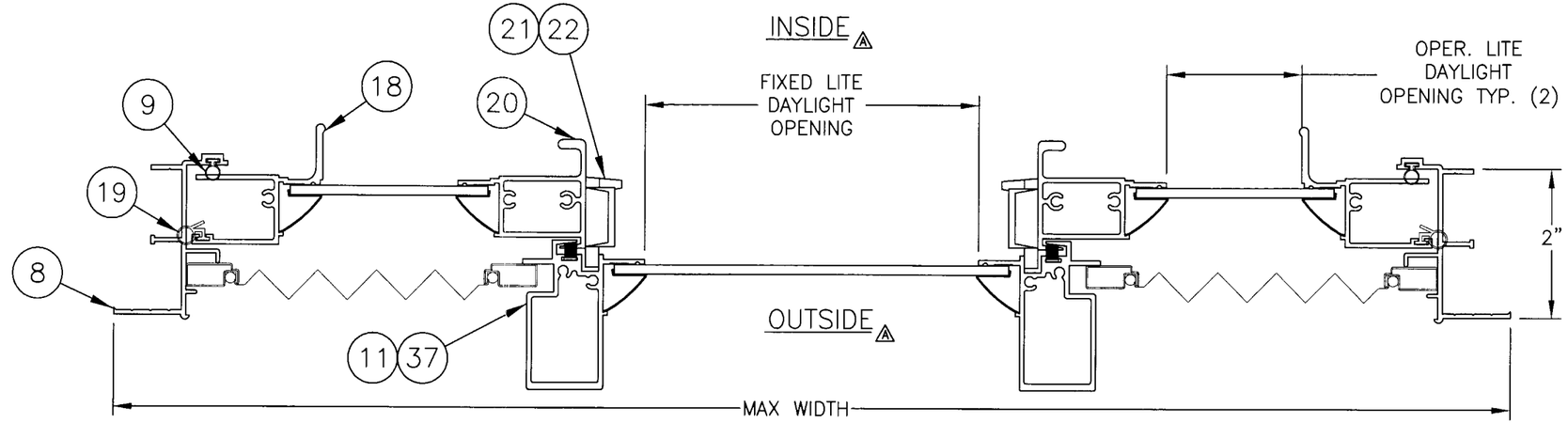


HORIZONTAL SECTION

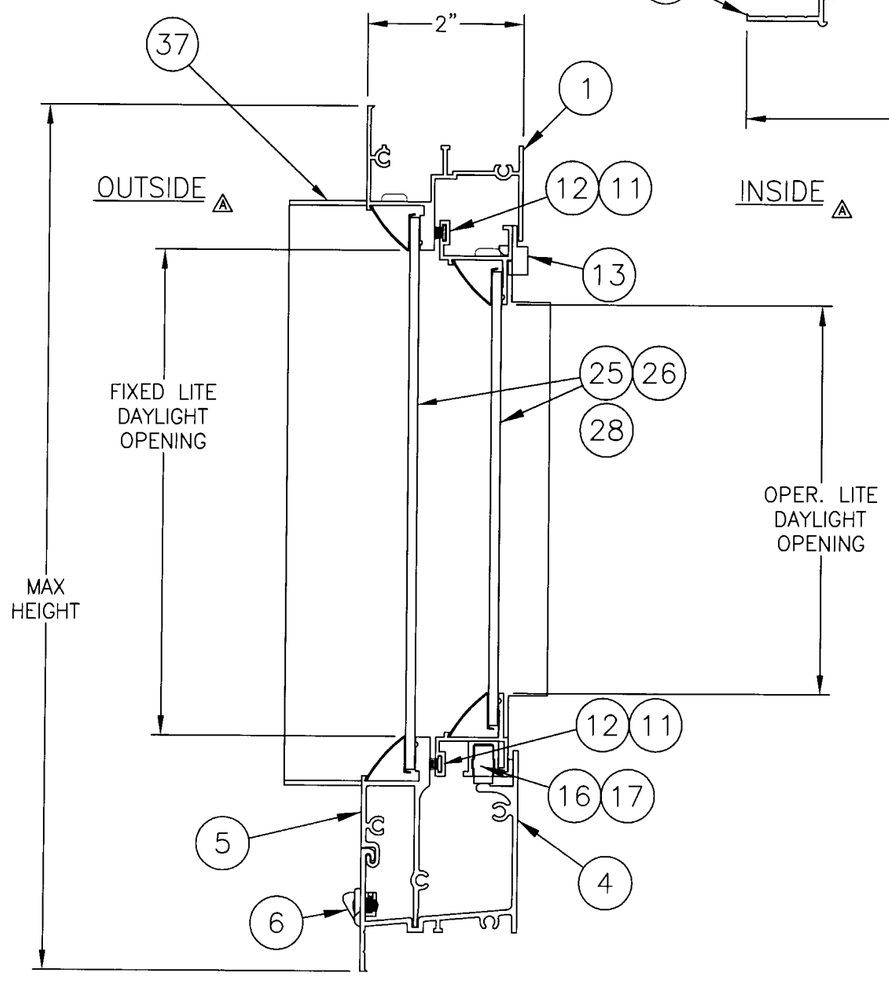


VERTICAL SECTION

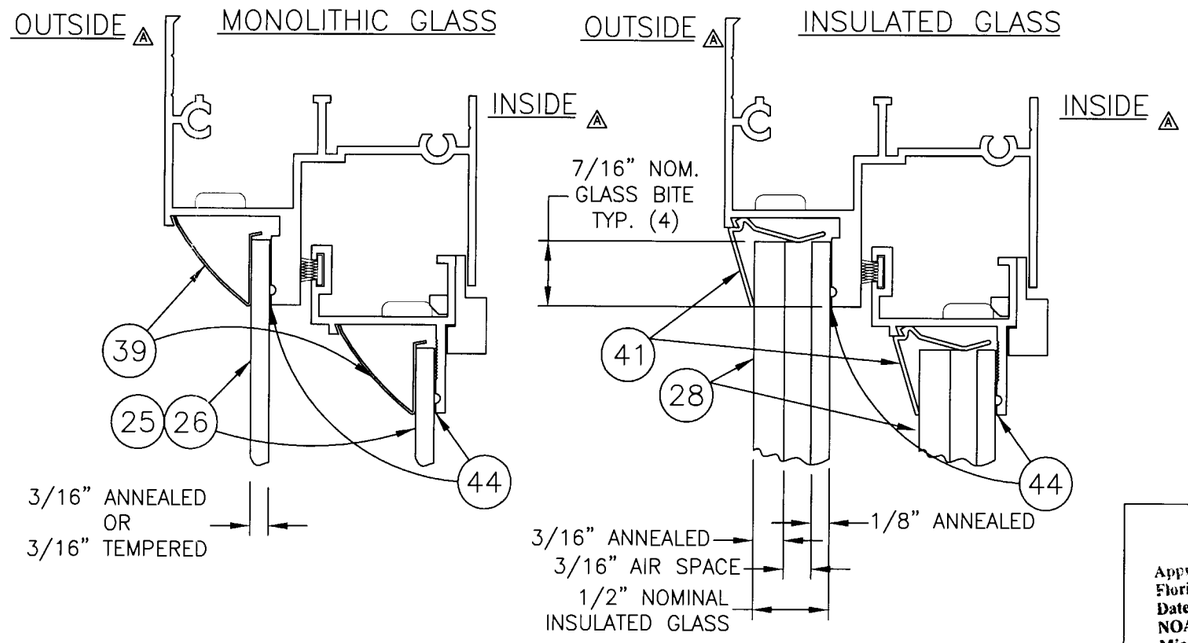


GLAZING DETAILS

Approved as complying with the Florida Buiding Code
Date Jue 27, 2002
NOA# 02-0515.09
Miami Dade Product Control Division
By

TEST REPORTS:
FTL-3327
FTL-3328
FTL-3329

5/10/02

Robert L. Clark, P.E.
PE #39712
Structural

PGT INDUSTRIES

1070 TECHNOLOGY DRIVE
NOKOMIS, FL 34275

P.O. BOX 1529
NOKOMIS, FL 34274

| Revsd By: | Date: | Revisions: |
|---|---|---|
| Revsd By: FK | Date: 4/23/02 | Revisions: ADD INT/EXT DESIG. |
| Drawn By: F.K. | Date: 1/23/02 | |

Description: XOX SECTIONS & GLAZING, 120Wx63H

Title: ALUM. HORIZ. ROLLER (HD. MTG. RAIL)

| Series/Model: | Scale: | Sheet: | Drawing No. | Rev: |
|---|---|---|---|---|
| HR-201 | NTS | 6 of 9 | 268-2 | A |

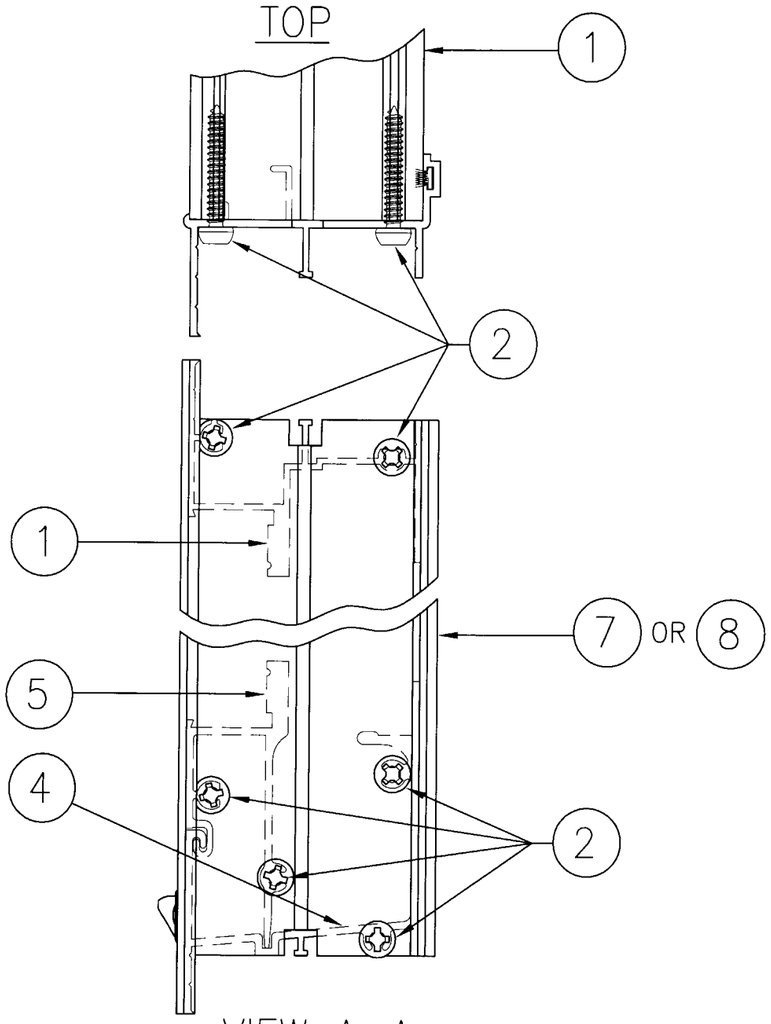


VIEW A–A ⚠
CORNER CONTRUCTION

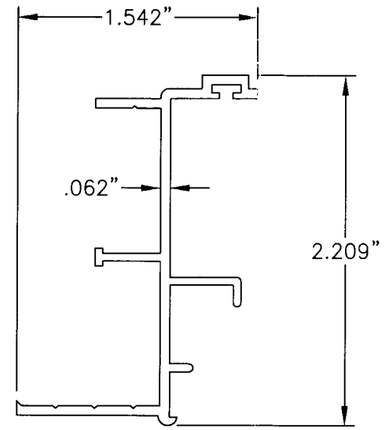


8 FRAME JAMB(OPERABLE)
MAT'L: 6063-T5
DWG# 219

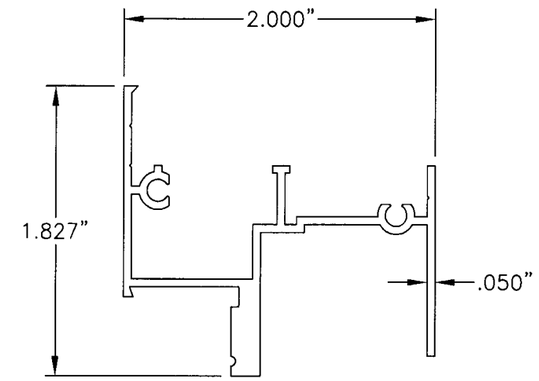


1 FRAME HEAD
MAT'L: 6063-T6 ⚠
DWG# 215B

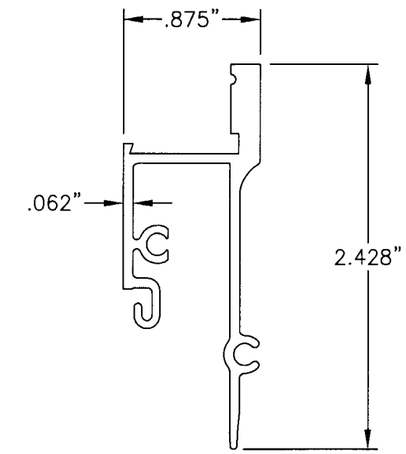


5 SILL ADAPTER
MAT'L: 6063-T6 ⚠
DWG# 265B

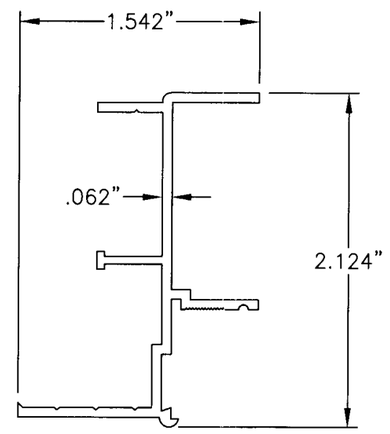


7 FRAME JAMB(FIXED)
MAT'L: 6063-T6 ⚠
DWG# 218A

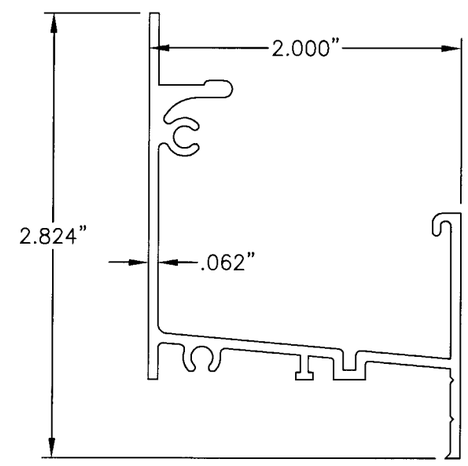


4 FRAME SILL
MAT'L: 6063-T5
DWG# 264

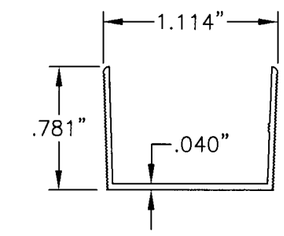


3 SASH STOP
MAT'L: 6063-T5
DWG# 110

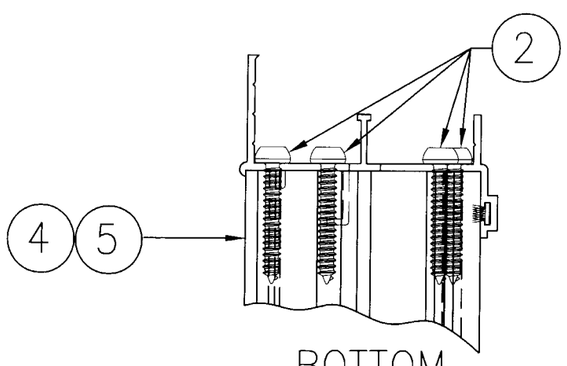


BOTTOM

TEST REPORTS:
FTL-3327 FTL-3328
FTL-3329 FTL-3330
FTL-3331 FTL-3332
FTL-3333 FTL-3334

Approved as complying with the Florida Buiding Code
Date June 27, 2002
NOA# 02-0513.09
Miami Dade Product Control Division
By

R L Clark
5/10/02
Robert L. Clark, P.E.
PE #39712
Structural

PGT INDUSTRIES
1070 TECHNOLOGY DRIVE
NOKOMIS, FL 34275
P.O. BOX 1529
NOKOMIS, FL 34274

| Revsd By: | Date: | Revisions: |
|---|---|---|
| | | |
| Revsd By: FK | Date: 4/23/02 | Revisions: ADD CORNER DET. |
| Drawn By: F.K. | Date: 1/23/02 | |

Description: EXTRUSION PROFILES & CORNER DETAIL

Title: ALUM. HORIZ. ROLLER (HD. MTG. RAIL)

| Series/Model: | Scale: | Sheet: | Drawing No. | Rev: |
|---|---|---|---|---|
| HR-201 | NTS | 7 of 9 | 268-2 | A |

| Item | Dwg # | Description | Mat'l | PGT # |
|---|---|---|---|---|
| 1 | 215B | Flange Frame Head | 6063-T6 ⚠ | 6215W,B,T |
| 2 | 1155 | #8 x 1.000 , QUAD Pn., SMS | Fastener | 781PQA |
| 3 | 110 | Sash Stop | 6063-T5 | 66387 |
| 4 | 264 | Main Frame Sill | 6063-T5 | 6264 |
| 5 | 265B | Main Frame Sill Adapter | 6063-T6 ⚠ | 6265BW,B,T |
| 6 | 1298 | Weep Hole Cover | Plastic | 71298 |
| 7 | 218A | Flange Frame Jamb **(Fixed, XO ONLY)** | 6063-T6 ⚠ | 6128W,B,T |
| 8 | 219 | Flange Frame Jamb **(Operable)** | 6063-T5 | 61088 |
| 9 | 1003 | Wstp., Bulb Vinyl | Vinly | 66601 |
| 11 | 1072 | Wstp.,.187 x .200, Fin Seal | Wthrstrip | 67919G |
| 12 | 223A | Sash Top & Bottom Rail | 6063-T6 ⚠ | 6223W,B,T |
| 13 | 242 | Sash Top Guide (Anti-rack) | Plastic | 42105 |
| 14 | 227 | End Cap | Plastic | 42114 |
| 15 | | #8 x .25, QUAD Pn., SMS | Fastener | 78X14PQAA |
| 16 | 225 | Roller Housing & Guide | Plastic | 42112N |
| 17 | 226 | Rollers, Brass | Brass Part | 7BRWHL2 |
| 18 | 221A | Sash Side Rail | 6063-T6 ⚠ | 6221W,B,T |
| 19 | 1001 | Wstp., Bulb Vinyl | Wthrstrip | 64664 |
| 20 | 222A | Sash Meeting Rail | 6063-T6 | 6222W,B,T |
| 21 | 1096 | Sweep Latch | Cast Part | 71096 |
| 22 | 1016 | #8 x .625 , Ph. Fl., SMS | Fastener | 7858 |
| 24 | | DSB Glass | Glass | |
| 25 | | 3/16" Annealed Glass | Glass | |
| 26 | | 3/16" Tempered Glass | Glass | |
| 27 | | 1/2" Insulated DSB/DSB | Glass | |
| 28 | | 1/2" Insulated DSB/3/16" Annealed | | |
| 29 | 1265-3 | 3/32 x 1/4 x 1 Setting Block | Rubber | 712653K |
| 30 | 1267 | 1/8 x 1/2 x 1 Setting Block | Rubber | 71267N |
| 31 | 1014 | Screen Frame | Aluminum | 61011 |
| 32 | 1013 | Screen Corner Key | Plastic | 41903 |
| 33 | 1073 | Screen Spring | Spring Steel | 78835M |
| 34 | 1278 | Screen Pull | Plastic | 70409K |
| 35 | 1618 | Screen Spline | Rubber | 68155K |
| 36 | | Screen Cloth | | 61816 |
| 37 | 267 | H.D. Fixed Meeting Rail | 6063-T6 | 6267 |
| 38 | 2718 | Glazing Bead (SSB/DSB) | Rollform Bd. | 65196 |
| 39 | 2719 | Glazing Bead - (3/16") | Rollform Bd. | 65016 |
| 40 | 1263 | Glazing Bead - (1/4") | Rollform Bd. | 65133 |
| 41 | 241 | Glazing Bead - (1/2" Insulated) | Plastic | 6VT48 |
| 42 | 1274 | Glazing Bead - (for Grill Kit - SSB/DSB) | Plastic | 6GB1274 |
| 43 | 1237 | Glazing Bead - (for Grill Kit - 3/16") | Plastic | 6GB1237 |
| 44 | | Slicone Adhesive Dow 899 or Equal | | |

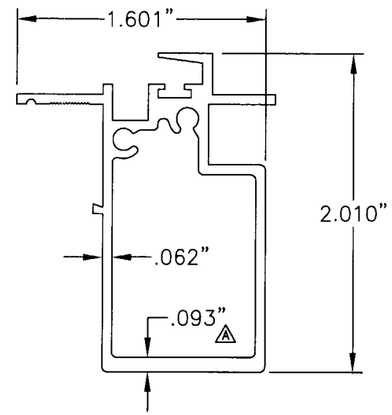


(37) H.D. FIXED MEETING RAIL
MAT'L: 6063-T6
DWG# 267

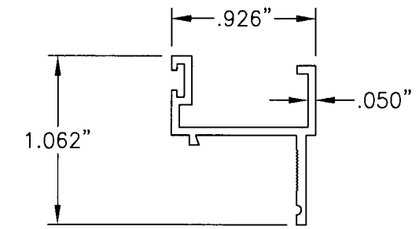


(12) SASH TOP & BOTT. RAIL
MAT'L: 6063-T6 ⚠
DWG# 223A

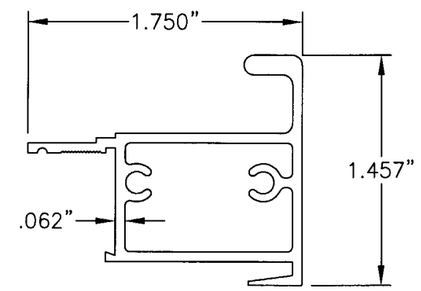


(20) SASH MEETING RAIL
MAT'L: 6063-T6 ⚠
DWG# 222A

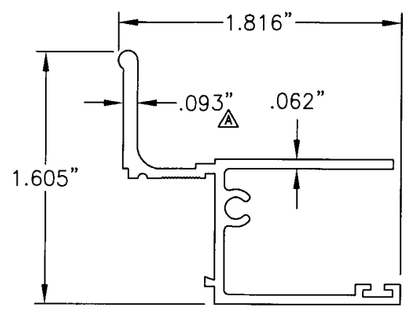


(18) SASH SIDE RAIL
MAT'L: 6063-T6 ⚠
DWG# 221A

TEST REPORTS:
FTL-3327 FTL-3328
FTL-3329 FTL-3330
FTL-3331 FTL-3332
FTL-3333 FTL-3334

Approved as complying with the Florida Buiding Code
Date June 27, 2002
NOA# 02-0313.09
Miami Dade Product Control Division
By

R L Clark
5/10/02

Robert L. Clark, P.E.
PE #39712
Structural

PGT INDUSTRIES

1070 TECHNOLOGY DRIVE
NOKOMIS, FL 34275

P.O. BOX 1529
NOKOMIS, FL 34274

| Revsd By: | Date: | Revisions: |
|---|---|---|
| Revsd By: FK | Date: 4/23/02 | Revisions: CHG ALLOY DESIG. |
| Drawn By: F.K. | Date: 1/23/02 | |

Description: EXTRUSION PROFILES & B.O.M.

Title: ALUM. HORIZ. ROLLER (HD. MTG. RAIL)

| Series/Model: | Scale: | Sheet: | Drawing No. | Rev: |
|---|---|---|---|---|
| HR-201 | NTS | 8 of 9 | 268-2 | A |

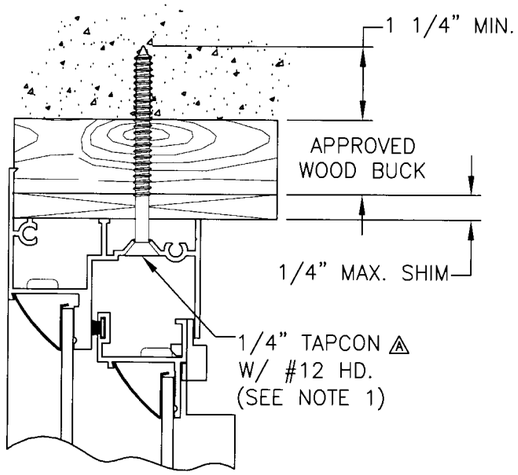


TYP. HEAD SECTION TO CONCRETE

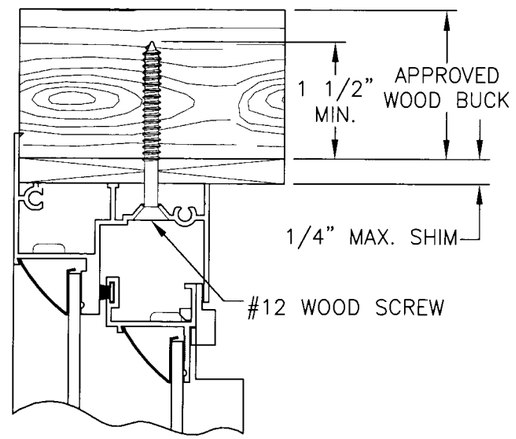


TYP. HEAD SECTION TO WOOD

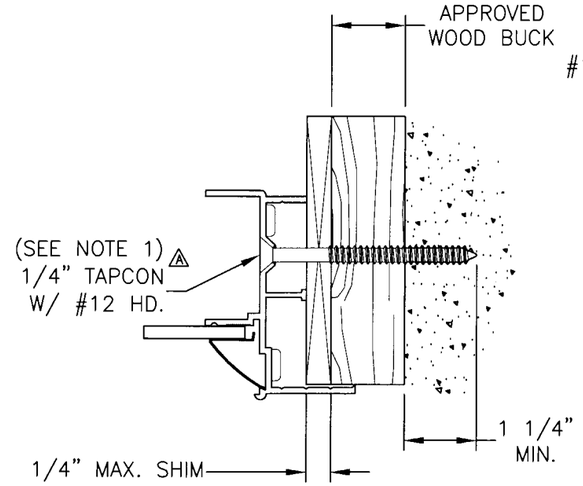


TYP. JAMB SECTION TO CONCRETE

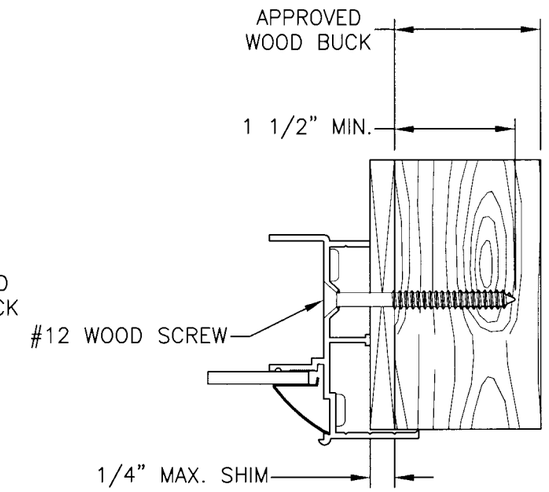


TYP. JAMB SECTION TO WOOD

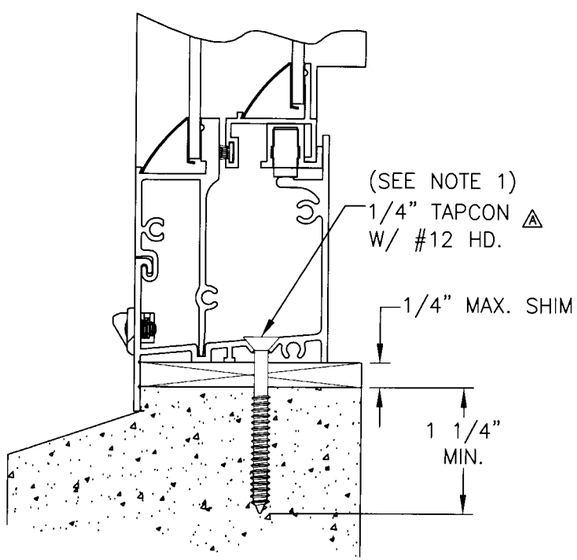


TYP. SILL SECTION TO CONCRETE

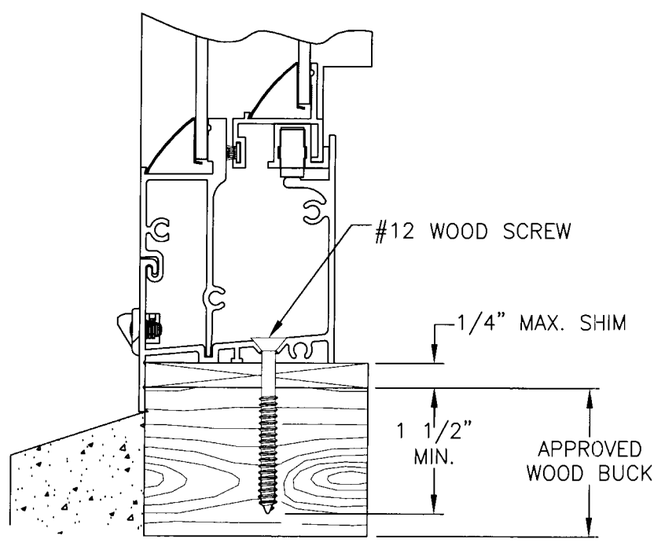


TYP. SILL SECTION TO WOOD

NOTE:

1. USE MIAMI-DADE COUNTY APPROVED ELCO OR ITW TAPCONS. (415# MINIMUM SHEAR RATING AT 1 1/4" EMBEDMENT) ⚠

TEST REPORTS:
FTL-3327 FTL-3328
FTL-3329 FTL-3330
FTL-3331 FTL-3332
FTL-3333 FTL-3334

Approved as complying with the Florida Buiding Code
Date June 27, 2002
NOA# 02-0313.09
Miami Dade Product Control Division
By

5/10/02

Robert L. Clark, P.E.
PE #39712
Structural

PGT INDUSTRIES

1070 TECHNOLOGY DRIVE
NOKOMIS, FL 34275

P.O. BOX 1529
NOKOMIS, FL 34274

| Revsd By: | Date: | Revisions: |
|---|---|---|
| Revsd By: FK | Date: 4/23/02 | Revisions: CHG TO 1/4 TAPCONS |
| Drawn By: F.K. | Date: 1/23/02 | |

Description: ANCHORAGE DETAILS

Title: ALUM. HORIZ. ROLLER (HD. MTG. RAIL)

| Series/Model: | Scale: | Sheet: | Drawing No. | Rev: |
|---|---|---|---|---|
| HR-201 | NTS | 9 of 9 | 268-2 | A |