MIAMI-DADE

BUILDING CODE COMPLIANCE OFFICE (BCCO)
PRODUCT CONTROL DIVISION

MIAMI-DADE COUNTY, FLORIDA
METRO-DADE FLAGLER BUILDING
140 WEST FLAGLER STREET, SUITE 1603
MIAMI, FLORIDA 33130-1563
(305) 375-2901 FAX (305) 375-2908

# NOTICE OF ACCEPTANCE (NOA)

**Hurst Awning Co., Inc.**
**6865 NW 36 Ave.**
**Miami, FL 33147**

**SCOPE:**

This NOA is being issued under the applicable rules and regulations governing the use of construction materials. The documentation submitted has been reviewed by Miami-Dade County Product Control Division and accepted by the Board of Rules and Appeals (BORA) to be used in Miami Dade County and other areas where allowed by the Authority Having Jurisdiction (AHJ).

This NOA shall not be valid after the expiration date stated below. The Miami-Dade County Product Control Division (In Miami Dade County) and/or the AHJ (in areas other than Miami Dade County) reserve the right to have this product or material tested for quality assurance purposes. If this product or material fails to perform in the accepted manner, the manufacturer will incur the expense of such testing and the AHJ may immediately revoke, modify, or suspend the use of such product or material within their jurisdiction. BORA reserves the right to revoke this acceptance, if it is determined by Miami-Dade County Product Control Division that this product or material fails to meet the requirements of the applicable building code.

This product is approved as described herein, and has been designed to comply with the High Velocity Hurricane Zone of the Florida Building Code.

**DESCRIPTION: 0.050 Aluminum Storm Panel Shutter**

**APPROVAL DOCUMENT:** Drawing No. 99-109, titled "0.050 Aluminum Storm Panel", sheets 1 through 4 of 4, prepared by V.J. Knezevich, P.E., dated 5/8/02, bearing the Miami-Dade County Product Control Revision stamp with the Notice of Acceptance number and expiration date by the Miami-Dade County Product Control Division.

**MISSILE IMPACT RATING: Large and Small Missile Impact**

**LABELING:** Each unit shall bear a permanent label with the manufacturer's name or logo, city, state and following statement: "Miami-Dade County Product Control Approved", unless otherwise noted herein.

**RENEWAL** of this NOA shall be considered after a renewal application has been filed and there has been no change in the applicable building code negatively affecting the performance of this product.

**TERMINATION** of this NOA will occur after the expiration date or if there has been a revision or change in the materials, use, and/or manufacture of the product or process. Misuse of this NOA as an endorsement of any product, for sales, advertising or any other purposes shall automatically terminate this NOA. Failure to comply with any section of this NOA shall be cause for termination and removal of NOA.

**ADVERTISEMENT:** The NOA number preceded by the words Miami-Dade County, Florida, and followed by the expiration date may be displayed in advertising literature. If any portion of the NOA is displayed, then it shall be done in its entirety.

**INSPECTION:** A copy of this entire NOA shall be provided to the user by the manufacturer or its distributors and shall be available for inspection at the job site at the request of the Building Official.

This NOA **revises NOA # 99-0621.06** and, consists of this page 1 as well as approval document mentioned above. The submitted documentation was reviewed by **Raul Rodriguez**

PRODUCT CONTROL ACCEPTED

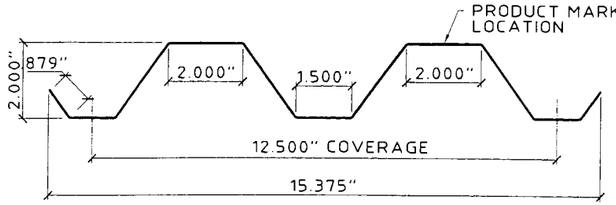


1 STORM PANEL
SCALE : 3" = 1'-0"

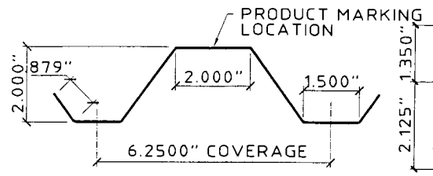


ONE HALF PANEL PER OPENING MAY BE USED AS REQUIRED TO COVER OPENING.

1a HALF STORM PANEL
SCALE : 3" = 1'-0"

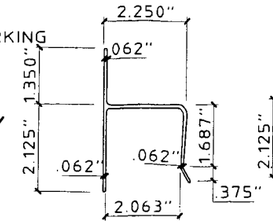


2 "h" HEADER
SCALE : 3" = 1'-0"

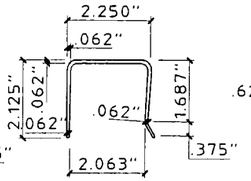


3 "U" HEADER
SCALE : 3" = 1'-0"

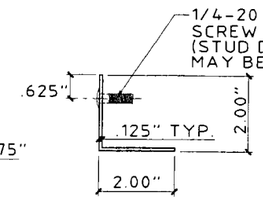


4 STUD ANGLE
SCALE : 3" = 1'-0"

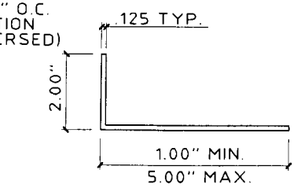


5 ANGLE
SCALE : 3" = 1'-0"

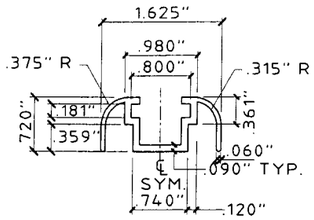


6 DECORATIVE C-TRACK
SCALE : HALF SIZE

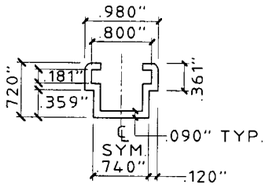


6a C / SLIDE TRACK
SCALE : HALF SIZE

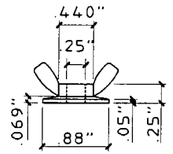


(ZAMAC 3 ALLOY)
9 WING NUT
SCALE : HALF SIZE

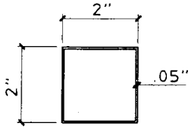


10 2" x 2" x 0.05" TUBE
SCALE : HALF SIZE

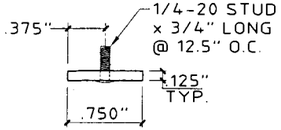


11 STUDDED STRAP (SLIDER)
SCALE : HALF SIZE

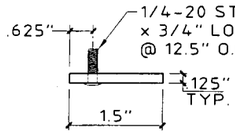


PLACE STRAP ON INTERIOR SIDE & FASTEN THRU PANELS WITH WASHERED WINGNUTS @ 12-1/2" O.C.

12 STRAP (SUPPORT AT PANEL MID-SPAN)
SCALE : HALF SIZE

GENERAL NOTES:

1. THESE APPROVAL DOCUMENTS REPRESENT A SHUTTER SYSTEM ANALYZED WITH THE PROVISION SET FOR THE ISSUANCE OF A NOTICE OF ACCEPTANCE (NOA) BY MIAMI-DADE COUNTY PRODUCT CONTROL DIVISION FOR THE HIGH VELOCITY HURRICANE ZONE (HVHZ) OF THE FLORIDA BUILDING CODE.
2. TO VERIFY THAT THE ANCHORS AS TESTED, ARE NOT OVERSTRESSED IN THESE APPROVAL DOCUMENTS, A 33% INCREASE IN ALLOWABLE STRESS WAS USED IN THE FASTENER ANALYSIS.
3. DETERMINE THE POSITIVE AND NEGATIVE DESIGN LOADS TO USE WHEN REFERENCING THESE DOCUMENTS IN ACCORDANCE WITH THE GOVERNING CODE AND GOVERNING WIND VELOCITY. FOR WIND LOAD CALCULATIONS IN ACCORDANCE WITH ASCE 7-98, A DIRECTIONALITY FACTOR OF Kd =1.0 SHALL BE USED.
4. THESE APPROVAL DOCUMENTS ARE GENERIC AND DO NOT INCLUDE INFORMATION FOR SITE-SPECIFIC APPLICATION OF THIS SHUTTER SYSTEM.
5. THESE APPROVAL DOCUMENTS COMPLY WITH CHAPTER 61G15-23 OF THE FLORIDA ADMINISTRATIVE CODE.
6. THESE APPROVAL DOCUMENTS, ARE SUITABLE TO BE APPLIED BY THE CONTRACTOR PROVIDED THE CONTRACTOR DOES NOT DEVIATE FROM THE CONDITIONS DETAILED HEREIN AND THE CONTRACTOR VERIFIES THAT THE EXISTING STRUCTURE DOES NOT DEVIATE IN EITHER FORM OR MATERIAL FROM THE STRUCTURAL SUBSTRATES DETAILED HEREIN.
7. ANY MODIFICATIONS OR ADDITIONS TO THESE APPROVAL DOCUMENTS WILL VOID THE APPROVAL DOCUMENTS.
8. WHEN THE SITE CONDITIONS DEVIATE FROM THESE APPROVAL DOCUMENTS, THE BUILDING OFFICIAL MAY ELECT ONE OF THE FOLLOWING OPTIONS:
   A) REQUIRE THAT SITE SPECIFIC DOCUMENTS BE PREPARED, SIGNED, DATED AND SEALED BY A LICENSED ENGINEER OR REGISTERED ARCHITECT, WHICH DETAIL AND JUSTIFY THE DEVIATION. SAID DOCUMENTS SHALL BE SUBMITTED TO THE PRODUCT ENGINEER FOR REVIEW AS A CONDITION TO THE BUILDING OFFICIAL GRANTING HIS/HER APPROVAL.
   B) REQUIRE THAT A ONE-TIME SITE SPECIFIC APPROVAL BE APPLIED FOR AND SECURED FROM THE MIAMI-DADE COUNTY PRODUCT CONTROL DIVISION

   WHEN THE SITE CONDITION DEVIATIONS OCCUR WITHIN THE HIGH VELOCITY HURRICANE ZONE AREAS ONLY OPTION "B" SHALL BE ACCEPTED BY THE BUILDING OFFICIAL.
9. PRODUCT MARKINGS SHALL BE WITHIN 12" OF ONE END OF THE PANEL WITH A MIN OF ONE MARKING PER PANEL AND SHALL BE LABELED AS FOLLOWS:
   HURST AWNING CO., INC.
   MIAMI, FLORIDA
   MIAMI-DADE COUNTY PRODUCT CONTROL APPROVED
10. STORM PANELS SHALL BE 5052-H32 ALUMINUM ALLOY, 0.050" THICK, MIN.
11. ALL BOLTS AND WASHERS SHALL BE GALVANIZED OR STAINLESS STEEL WITH A MINIMUM TENSILE STRENGTH OF 60 KSI.
12. ALL EXTRUSIONS SHALL BE 6063-T6 ALUMINUM ALLOY, U.O.N
13. TOP & BOTTOM DETAILS SHOWN MAY BE INTERCHANGED AS FIELD CONDITIONS DICTATE. PANELS MAY BE MOUNTED HORIZONTALLY WHERE APPLICABLE, EXCEPT FOR "h" AND "U" HEADER MOUNTING CONDITIONS.

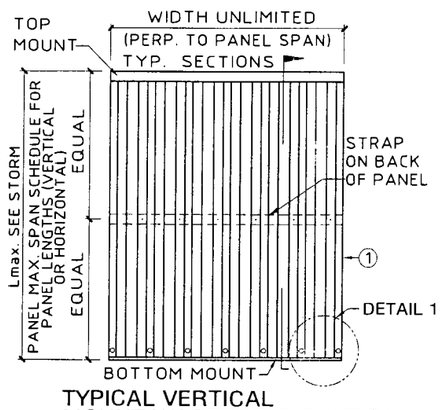


TYPICAL VERTICAL MOUNT W/ STRAP ELEVATION
N.T.S.

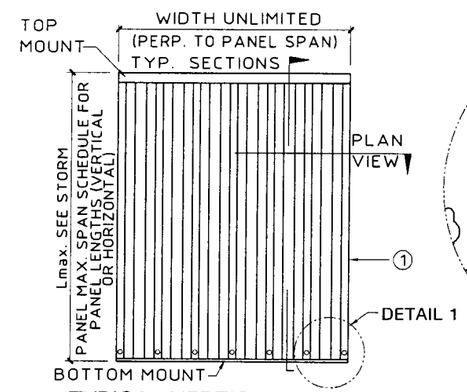


TYPICAL VERTICAL MOUNT W/O STRAP ELEVATION
N.T.S.

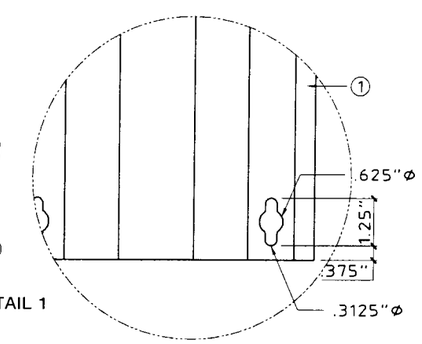


DETAIL 1
SCALE : 3" = 1'-0"

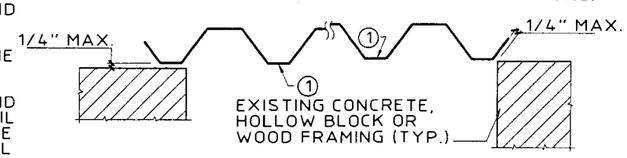


WALL / DIRECT MOUNT

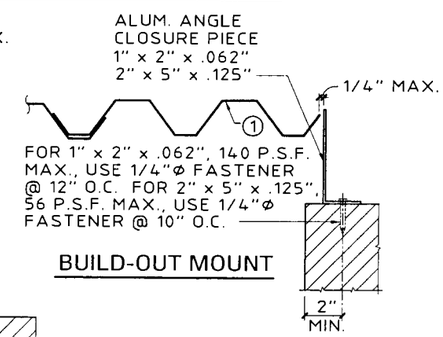


BUILD-OUT MOUNT

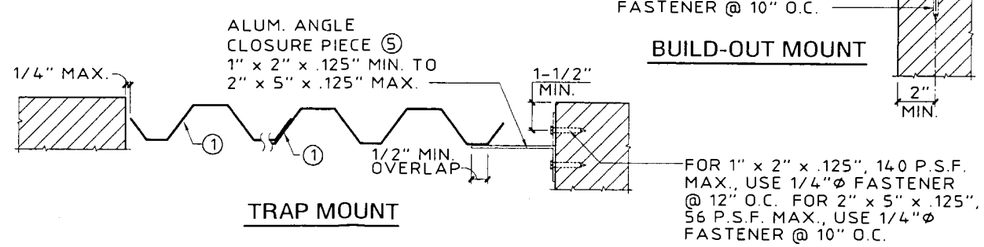


TRAP MOUNT

TYPICAL CLOSURE DETAILS (PLAN VIEW)
SCALE: 1-1/2" = 1'-0"

PRODUCT REVISED
as complying with the Florida Building Code
Acceptance No. 02-0315.02
Expiration Date 08/19/02
By
Miami Dade Product Control Division

KNEZEVICH & ASSOCIATES, INC.
CONSULTING ENGINEERS • PRODUCT TESTING
1260 N. UNIVERSITY DRIVE, SUITE 180 • FORT LAUDERDALE, FL 33322
TEL: (954) 382-2800 • FAX: (954) 382-2989 • FLORIDA COA #3205
WEBSITE: WWW.KNEZEVICH.COM • E-MAIL: KA@KNEZEVICH.COM
COPYRIGHT © 2002 KNEZEVICH & ASSOCIATES, INC

0.050" ALUMINUM STORM PANEL

Manufacturers of Hurricane & Security Protection Products
HURST AWNING COMPANY, INC.
QUALITY SERVICE SINCE 1957
6865 N.W. 36th Avenue
Miami, Florida 33147
Phone: (305) 635-0900
Toll Free: (800) 327-0905
Fax: (305) 634-9078

V.J. KNEZEVICH
PROFESSIONAL ENGINEER
Fl. License No. PE 0010983
MAY 10 2002

revisions

| no | date | by | description |
|---|---|---|---|
| 1 | 07/20/99 | JWK | COUNTY COMMENTS |
| 2 | 05/08/02 | DLB | GENERAL NOTES |

date 06/08/1999
scale AS NOTED
drawn by MC
design by MD
checked by VJK
drawing no. 99-109
sheet 1 of 4

Print Information: J:\CADD\Cadd99\Hurst\99-109\R2-sub\99-109-01.dwg OBlanco 05/10/2002 09:33:12am
05/08/02 16:17

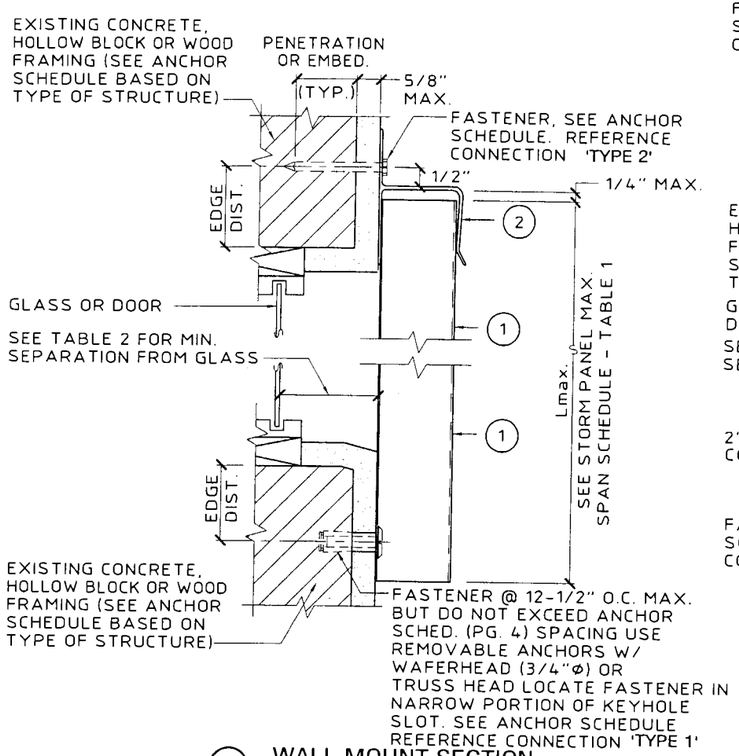


A WALL MOUNT SECTION
SCALE : 3" = 1'-0"

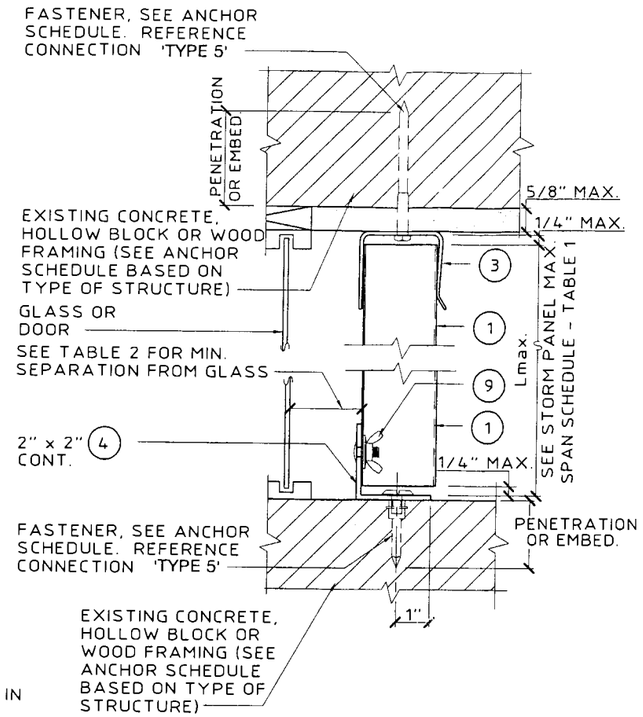


B CEILING/FLOOR MOUNT SECTION
SCALE : 3" = 1'-0"

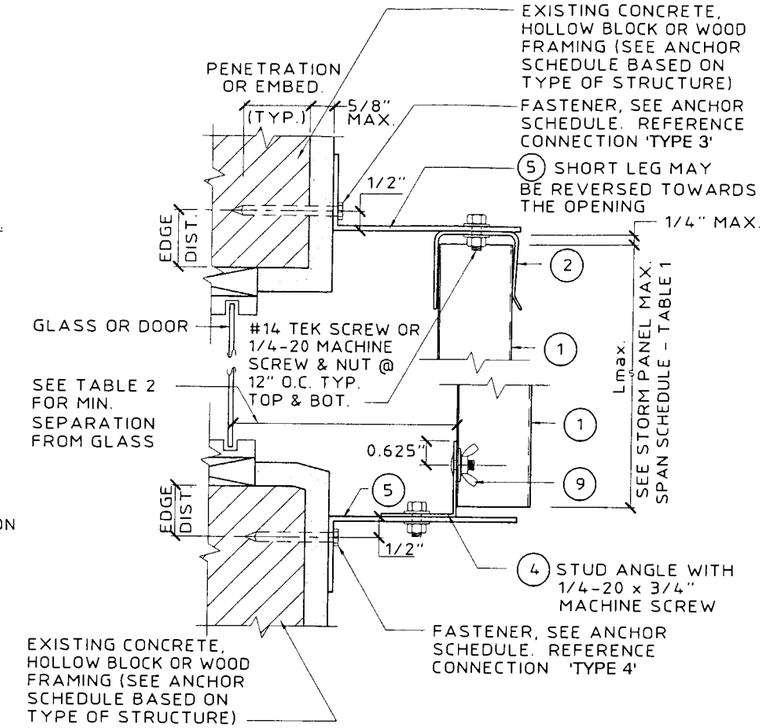


C WALL BUILD-OUT MOUNT SECTION
SCALE : 3" = 1'-0"

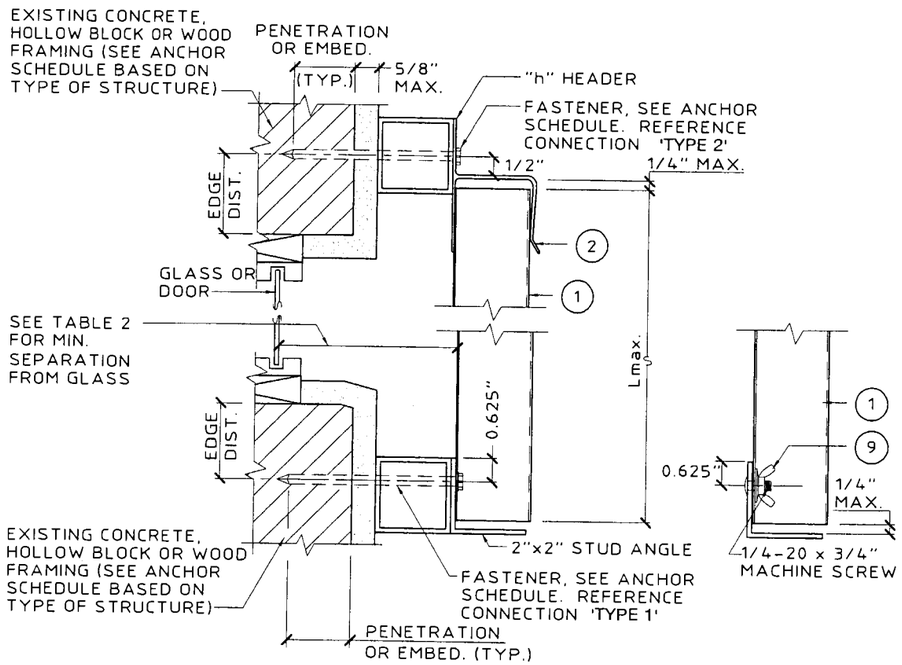


D WALL MOUNT SECTION
SCALE : 3" = 1'-0"

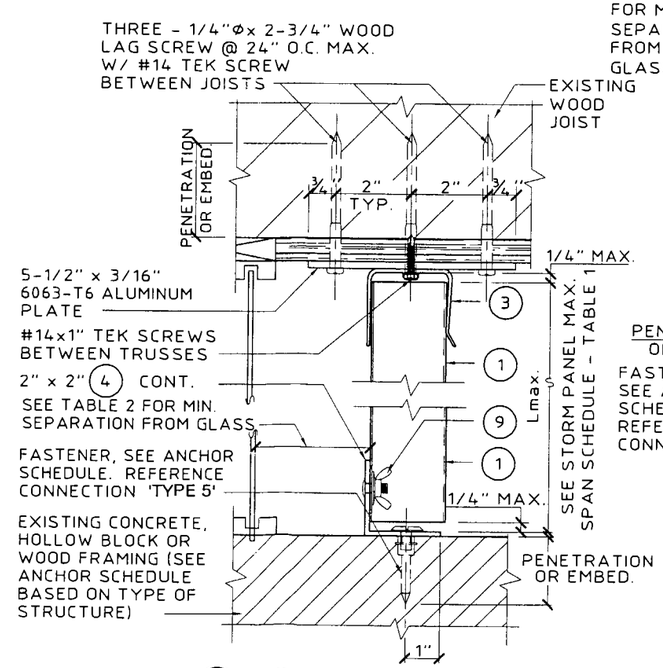


E CEILING/FLOOR MOUNT SECTION
SCALE : 3" = 1'-0"

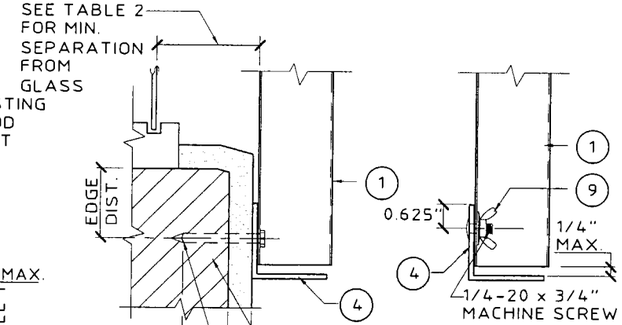


F WALL MOUNT SILL
SCALE : 3" = 1'-0"

PRODUCT REVISED
as complying with the Florida Building Code
Acceptance No 02-0315.02
Expiration Date 08/19/02
By
Miami Dade Product Control Division

KNEZEVICH & ASSOCIATES, INC.
CONSULTING ENGINEERS • PRODUCT TESTING
1260 N. UNIVERSITY DRIVE, SUITE 180 • FORT LAUDERDALE, FL 33322
TEL: (954) 382-2800 • FAX: (954) 382-2989 • FLORIDA COA #3205
WEBSITE: WWW.KNEZEVICH.COM • E-MAIL: KA@KNEZEVICH.COM
COPYRIGHT © 2002 KNEZEVICH & ASSOCIATES, INC

0.050" ALUMINUM STORM PANEL

Manufacturers of Hurricane & Security Protection Products
HURST AWNING COMPANY, INC.
"QUALITY SERVICE SINCE 1957"
6865 N.W. 36th Avenue
Miami, Florida 33147
Phone: (305) 635-0900
Toll Free: (800) 327-0905
Fax: (305) 634-9078

V.J. KNEZEVICH
PROFESSIONAL ENGINEER
FL License No: PE-0010983

MAY 1 0 2002

revisions

| no | date | by | description |
|---|---|---|---|
| 1 | 07/20/99 | JWK | COUNTY COMMENTS |
| 2 | 05/08/02 | DLB | GENERAL NOTES |

date 06/08/1999
scale AS NOTED
drawn by MC
design by MD
checked by VJK
drawing no. 99-109
sheet 2 of 4

Print information: J:\CADD\Cadd99\Hurst\99-109\R2-sub\99-109-02.dwg AVazquez 05/09/2002 02:49:45pm
05/09/02 14:49

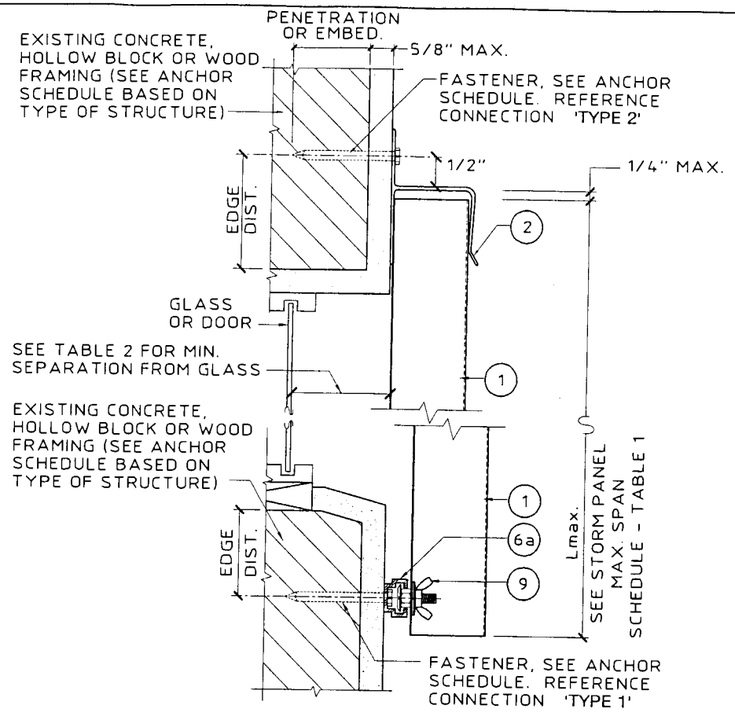


(G) WAFER HEAD BOLT ASSEMBLY
SCALE : 3" = 1'-0"
1/4-20 NUT IS NOT NECESSARY IF NOT USED AS INSIDE MOUNT

TABLE 1

## STORM PANEL SPAN SCHEDULE

| NEGATIVE DESIGN LOAD W (PSF) | FOR ALL MOUNTING CONDITIONS L MAX. (FT-IN) |
|---|---|
| 30.0 | 10 - 6 |
| 35.0 | 10 - 6 |
| 41.6 | 10 - 1 |
| 45.0 | 9 - 10 |
| 50.0 | 9 - 4 |
| 55.0 | 8 - 11 |
| 60.0 | 8 - 6 |
| 62.0 | 8 - 5 |
| 65.0 | 8 - 2 |
| 70.0 | 7 - 11 |
| 72.0 | 7 - 9 |
| 75.0 | 7 - 8 |
| 80.0 | 7 - 5 |
| 90.0 | 7 - 0 |
| 100.0 | 6 - 3 |
| 110.0 | 5 - 8 |
| 120.0 | 5 - 3 |
| 130.0 | 4 - 10 |
| 140.0 | 4 - 6 |
| 150.0 | 4 - 2 |
| 160.0 | 3 - 11 |
| 170.0 | 3 - 8 |
| 180.0 | 3 - 6 |
| 190.0 | 3 - 3 |
| 200.0 | 3 - 1 |

TABLE 2

## MINIMUM STORM PANEL SEPARATION FROM GLASS SCHEDULE

| POSITIVE DESIGN LOAD(W) (PSF) | ACTUAL SHUTTER SPAN (FT - IN) | MINIMUM SEPARATION FOR INSTALLATIONS 30' OR LESS ABOVE GRADE (INCHES) | | MINIMUM SEPARATION FOR INSTALLATIONS GREATER THAN 30' ABOVE GRADE (INCHES) | |
|---|---|---|---|---|---|
| | | WITH STRAP | WITHOUT STRAP | WITH STRAP | WITHOUT STRAP |
| 35.0 | 7 - 0 | 2 | 2-3/4 | 1-1/2 | 1-1/2 |
| | 8 - 6 | 2-1/4 | 3 | 2 | 2 |
| | 10 - 6 | 3 | 3-3/4 | 3 | 3 |
| 40.0 | 7 - 0 | 2 | 2-3/4 | 1-1/2 | 1-1/2 |
| | 8 - 6 | 2-1/4 | 3 | 2 | 2 |
| | 10 - 1 | 3 | 3-3/4 | 3 | 3 |
| 50.0 | 7 - 0 | 2 | 2-3/4 | 1-3/4 | 1-3/4 |
| | 8 - 6 | 2-1/4 | 3 | 2-1/4 | 2-1/4 |
| | 9 - 4 | 2-3/4 | 3-3/4 | 2-3/4 | 2-3/4 |
| 60.0 | 6 - 0 | 2 | 2-3/4 | 1-1/2 | 1-1/2 |
| | 7 - 0 | 2-1/2 | 2-3/4 | 1-3/4 | 1-3/4 |
| | 8 - 6 | 2-1/2 | 3 | 2-1/2 | 2-1/2 |
| 70.0 | 6 - 0 | 2 | 2-3/4 | 1-1/2 | 1-1/2 |
| | 7 - 0 | 2 | 2-3/4 | 1-7/8 | 1-7/8 |
| | 7 - 11 | 2-3/8 | 3-3/4 | 2-3/8 | 2-3/8 |

NOTES:

1. ENTER TABLE 1 WITH NEGATIVE DESIGN LOAD TO DETERMINE MAX. PANEL SPAN. POSITIVE LOADS LESS THAN OR EQUAL TO THE NEGATIVE LOAD ARE ACCEPTABLE.
2. ENTER TABLE 2 WITH POSITIVE DESIGN LOAD TO DETERMINE MIN. SEPARATION FROM GLASS.
3. FOR DESIGN LOADS BETWEEN TABULATED VALUES, USE NEXT HIGHER LOAD OR LINEAR INTERPOLATION MAY BE USED TO DETERMINE ALLOWABLE SPANS.

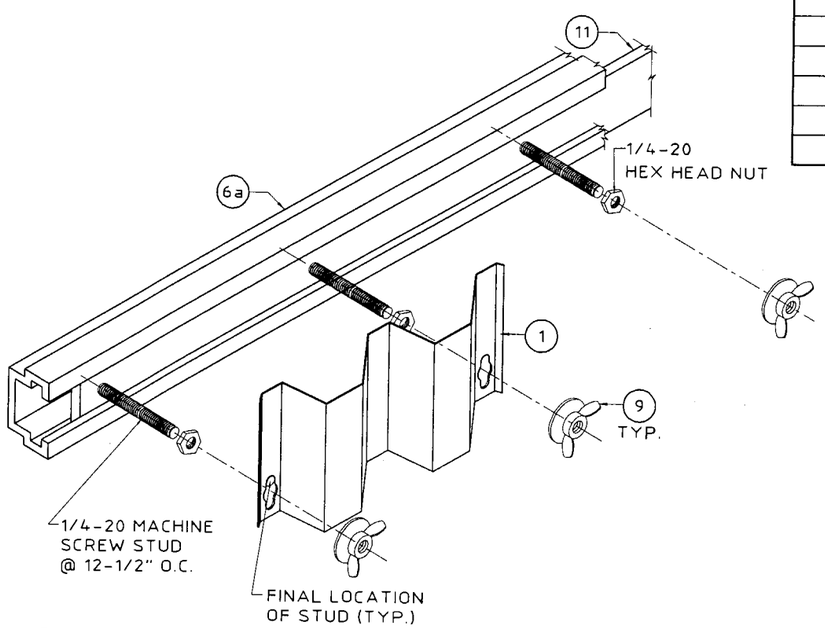


(H) 3/4" STRAP ASSEMBLY (SILL ONLY - ISOMETRIC VIEW)
WAFER HEAD BOLT ASSEMBLY FOR (G)-SIMILAR (NO STRAP)
N.T.S.

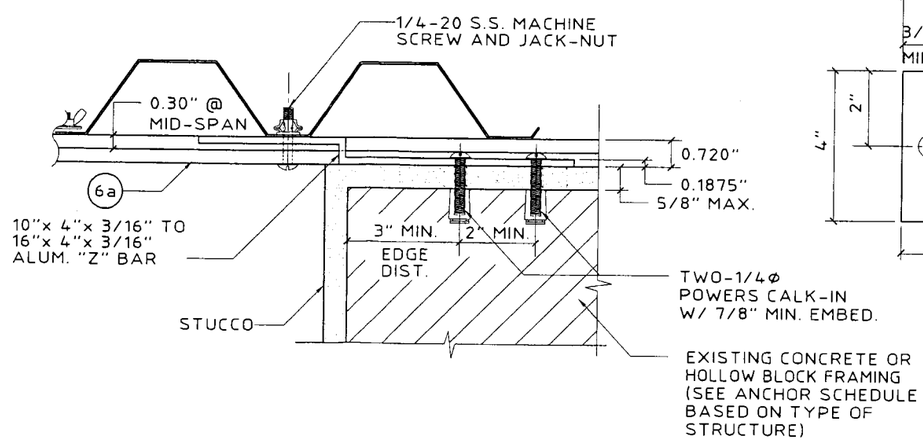


(I) LOCKING "Z" BAR DETAIL
WHEN USING (G) OR (H) SILL
ONE PER ASSEMBLY (PLAN VIEW)
SCALE : 3"= 1'- 0"

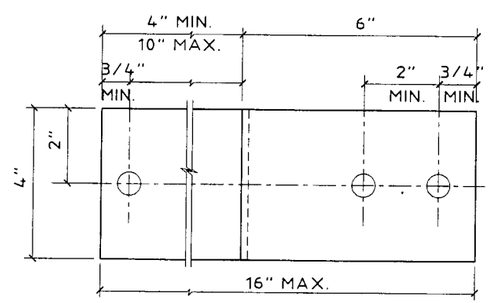


"Z" BAR DETAIL

PRODUCT REVISED
as complying with the Florida Buiding Code
Acceptance No 02-0315.02
Expiration Date 08/19/02
By
Miami Dade Product Control Division

KNEZEVICH & ASSOCIATES, INC.
CONSULTING ENGINEERS • PRODUCT TESTING
1260 N. UNIVERSITY DRIVE, SUITE 180 • FORT LAUDERDALE, FL 33322
TEL: (954) 382-2800 • FAX: (954) 382-2989 • FLORIDA COA #3205
WEBSITE: WWW.KNEZEVICH.COM • E-MAIL: KA@KNEZEVICH.COM
COPYRIGHT © 2002 KNEZEVICH & ASSOCIATES, INC.

0.050" ALUMINUM STORM PANEL

Manufacturers of Hurricane & Security Protection Products
HURST AWNING COMPANY, INC.
"QUALITY SERVICE SINCE 1957"
6865 N.W. 36th Avenue
Miami, Florida 33147
Phone: (305) 635-0900
Toll Free: (800) 327-0905
Fax: (305) 634-9078

V.J. KNEZEVICH
PROFESSIONAL ENGINEER
FL License No: PE 0010983

MAY 10 2002

| revisions | | | |
|---|---|---|---|
| no | date | by | description |
| 1 | 07/20/99 | JWK | COUNTY COMMENTS |
| 2 | 05/08/02 | DLB | GENERAL NOTES |

date 06/08/1999
scale AS NOTED
drawn by MC
design by MD
checked by VJK
drawing no. 99-109
sheet 3 of 4

Print Information: J:\CADD\Cadd99\Hurst\99-109\R2-sub\99-109-03.dwg AVazquez 05/09/2002 02:50:00pm
05/09/02 14:49

## ANCHOR SCHEDULE - WITHOUT SPECIAL INSPECTION

FASTENER MAXIMUM SPACING (INCHES) REQUIRED FOR VARIOUS DESIGN LOADS AND SPANS

| EXISTING STRUCTURE | ANCHOR TYPE | LOAD (W) PSF MAX. (SEE NOTE 1) | MIN. 2" EDGE DISTANCE | | | | | | | | | | | | | | | MIN. 3" EDGE DISTANCE | | | | | | | | | | | | | | |
|---|---|---|---|---|---|---|---|---|---|---|---|---|---|---|---|---|---|---|---|---|---|---|---|---|---|---|---|---|---|---|---|---|
| | | | SPANS UP TO 5' - 0" (SEE NOTE 1) | | | | | SPANS UP TO 8' - 8" (SEE NOTE 1) | | | | | SPANS UP TO 10' - 6" (SEE NOTE 1) | | | | | SPANS UP TO 5' - 0" (SEE NOTE 1) | | | | | SPANS UP TO 8' - 8" (SEE NOTE 1) | | | | | SPANS UP TO 10' - 6" (SEE NOTE 1) | | | | |
| | | | CONNECTION TYPE | | | | | CONNECTION TYPE | | | | | CONNECTION TYPE | | | | | CONNECTION TYPE | | | | | CONNECTION TYPE | | | | | CONNECTION TYPE | | | | |
| | | | 1 | 2 | 3 | 4 | 5 | 1 | 2 | 3 | 4 | 5 | 1 | 2 | 3 | 4 | 5 | 1 | 2 | 3 | 4 | 5 | 1 | 2 | 3 | 4 | 5 | 1 | 2 | 3 | 4 | 5 |
| CONCRETE | 1/4"Φ ITW TAPCON W/ 1-1/4" MIN. EMBEDMENT (MIN. 3,100 P.S.I. CONCRETE) | 48.0 | 16 | 16 | 16 | 16 | 14 | 16 | 6 | 16 | 16 | 8 | 16 | 5 | 16 | 16 | 7 | 16 | 16 | 16 | 16 | 16 | 16 | 7 | 16 | 16 | 10 | 16 | 5 | 16 | 16 | 8 |
| | | 62.0 | 16 | 11 | 16 | 16 | 11 | 15 | 4 | 15 | 15 | 6 | 12 | 3 | 12 | 12 | 5 | 16 | 13 | 16 | 16 | 14 | 16 | 5 | 16 | 16 | 8 | 14 | 4 | 14 | 14 | 6 |
| | | 72.0 | 16 | 8 | 16 | 16 | 9 | 12 | 3 | 12 | 12 | 5 | 12 | 3 | 12 | 12 | 5 | 16 | 9 | 16 | 16 | 12 | 14 | 4 | 14 | 14 | 6 | 14 | 4 | 14 | 14 | 6 |
| | | 92.0 | 16 | 5 | 16 | 16 | 7 | 12 | 3 | 12 | 12 | 5 | 12 | 3 | 12 | 12 | 5 | 16 | 6 | 16 | 16 | 9 | 14 | 4 | 14 | 14 | 6 | 14 | 4 | 14 | 14 | 6 |
| | | 200.0 | 12 | 3 | 12 | 12 | 5 | 12 | 3 | 12 | 12 | 5 | 12 | 3 | 12 | 12 | 5 | 14 | 4 | 14 | 14 | 6 | 14 | 4 | 14 | 14 | 6 | 14 | 4 | 14 | 14 | 6 |
| | * * 1/4"Φ ELCO MALE/ FEMALE "PANELMATE" W/ 1-3/4 MIN. EMBEDMENT & 1/4-20 MACHINE SCREW WITH NUT (MIN. 3,323 P.S.I. CONCRETE) | 48.0 | 16 | 16 | 16 | 16 | 11 | 15 | 5 | 15 | 15 | 6 | 12 | 4 | 12 | 12 | 5 | 16 | 16 | 16 | 16 | 12 | 16 | 5 | 16 | 16 | 7 | 13 | 4 | 13 | 13 | 6 |
| | | 62.0 | 16 | 9 | 16 | 16 | 8 | 12 | 3 | 12 | 12 | 5 | 10 | | 10 | 9 | 4 | 16 | 9 | 16 | 16 | 9 | 12 | 3 | 12 | 12 | 5 | 10 | 3 | 10 | 10 | 4 |
| | | 72.0 | 16 | 7 | 16 | 16 | 7 | 10 | 3 | 10 | 10 | 4 | 10 | | 10 | 9 | 4 | 16 | 7 | 16 | 16 | 8 | 10 | 3 | 10 | 10 | 4 | 10 | 3 | 10 | 10 | 4 |
| | | 92.0 | 14 | 4 | 14 | 14 | 5 | 10 | | 10 | 9 | 4 | 10 | | 10 | 9 | 4 | 14 | 4 | 14 | 14 | 6 | 10 | 3 | 10 | 10 | 4 | 10 | 3 | 10 | 10 | 4 |
| | | 200.0 | 10 | | 10 | 9 | 4 | 10 | | 10 | 9 | 4 | 10 | | 10 | 9 | 4 | 10 | 3 | 10 | 10 | 4 | 10 | 3 | 10 | 10 | 4 | 10 | 3 | 10 | 10 | 4 |
| | * 1/4"Φ POWERS CALK-IN W/ 7/8" EMBEDMENT & 1/4-20 STAINLESS STEEL MACHINE SCREW (MIN. 3,000 P.S.I. CONCRETE) | 48.0 | 12.5 | 12.5 | 12.5 | 12.5 | 12.5 | 12.5 | 11 | 12.5 | 12.5 | 9 | 12.5 | 8 | 12.5 | 12.5 | 8 | 12.5 | 12.5 | 12.5 | 12.5 | 12.5 | 12.5 | 12.5 | 12.5 | 12.5 | 12.5 | 12.5 | 10 | 12.5 | 12.5 | 12.5 |
| | | 62.0 | 12.5 | 12.5 | 12.5 | 12.5 | 12.5 | 12.5 | 7 | 12.5 | 12.5 | 7 | 12.5 | 6 | 12.5 | 12.5 | 6 | 12.5 | 12.5 | 12.5 | 12.5 | 12.5 | 12.5 | 9 | 12.5 | 12.5 | 12 | 12.5 | 7 | 12.5 | 12.5 | 10 |
| | | 72.0 | 12.5 | 12.5 | 12.5 | 12.5 | 11 | 12.5 | 6 | 12.5 | 12.5 | 6 | 12.5 | 6 | 12.5 | 12.5 | 6 | 12.5 | 12.5 | 12.5 | 12.5 | 12.5 | 12.5 | 7 | 12.5 | 12.5 | 10 | 12.5 | 7 | 12.5 | 12.5 | 10 |
| | | 92.0 | 12.5 | 9 | 12.5 | 12.5 | 8 | 12.5 | 6 | 12.5 | 12.5 | 6 | 12.5 | 6 | 12.5 | 12.5 | 6 | 12.5 | 12 | 12.5 | 12.5 | 12.5 | 12.5 | 7 | 12.5 | 12.5 | 10 | 12.5 | 7 | 12.5 | 12.5 | 10 |
| | | 200.0 | 12.5 | 6 | 12.5 | 12.5 | 6 | 12.5 | 6 | 12.5 | 12.5 | 6 | 12.5 | 6 | 12.5 | 12.5 | 6 | 12.5 | 7 | 12.5 | 12.5 | 10 | 12.5 | 7 | 12.5 | 12.5 | 10 | 12.5 | 7 | 12.5 | 12.5 | 10 |
| | 1/4"Φ POWERS ZAMAC NAIL-IN W/ 1-1/8" MIN. EMBEDMENT (MIN. 3,000 P.S.I. CONCRETE) | 48.0 | 16 | 16 | 16 | 16 | 12 | 15 | 5 | 15 | 15 | 7 | 13 | 4 | 13 | 13 | 6 | 16 | 16 | 16 | 16 | 15 | 16 | 6 | 16 | 16 | 8 | 14 | 4 | 14 | 14 | 7 |
| | | 62.0 | 16 | 9 | 16 | 16 | 9 | 12 | 3 | 12 | 12 | 5 | 10 | 3 | 10 | 10 | 4 | 16 | 10 | 16 | 16 | 11 | 13 | 4 | 13 | 13 | 6 | 11 | 3 | 11 | 11 | 5 |
| | | 72.0 | 16 | 7 | 16 | 16 | 8 | 10 | 3 | 10 | 10 | 4 | 10 | 3 | 10 | 10 | 4 | 16 | 8 | 16 | 16 | 10 | 11 | 3 | 11 | 11 | 5 | 11 | 3 | 11 | 11 | 5 |
| | | 92.0 | 14 | 4 | 14 | 14 | 6 | 10 | 3 | 10 | 10 | 4 | 10 | 3 | 10 | 10 | 4 | 16 | 5 | 16 | 16 | 7 | 11 | 3 | 11 | 11 | 5 | 11 | 3 | 11 | 11 | 5 |
| | | 200.0 | 10 | 3 | 10 | 10 | 4 | 10 | 3 | 10 | 10 | 4 | 10 | 3 | 10 | 10 | 4 | 11 | 3 | 11 | 11 | 5 | 11 | 3 | 11 | 11 | 5 | 11 | 3 | 11 | 11 | 5 |
| | 3/8"Φ POWERS TAPPER W/ 1-3/4" MIN. EMBEDMENT (MIN. 3,000 P.S.I. CONCRETE) | 48.0 | 16 | 16 | 16 | 16 | 16 | 16 | 8 | 16 | 16 | 9 | 16 | 6 | 16 | 16 | 7 | 16 | 16 | 16 | 16 | 16 | 16 | 9 | 16 | 16 | 11 | 16 | 6 | 16 | 16 | 9 |
| | | 62.0 | 16 | 14 | 16 | 16 | 12 | 16 | 5 | 16 | 16 | 7 | 15 | 4 | 15 | 15 | 6 | 16 | 16 | 16 | 16 | 15 | 16 | 6 | 16 | 16 | 9 | 16 | 5 | 16 | 16 | 7 |
| | | 72.0 | 16 | 10 | 16 | 16 | 10 | 15 | 4 | 15 | 15 | 6 | 15 | 4 | 15 | 15 | 6 | 16 | 12 | 16 | 16 | 13 | 16 | 5 | 16 | 16 | 7 | 16 | 5 | 16 | 16 | 7 |
| | | 92.0 | 16 | 7 | 16 | 16 | 8 | 15 | 4 | 15 | 15 | 6 | 15 | 4 | 15 | 15 | 6 | 16 | 8 | 16 | 16 | 10 | 16 | 5 | 16 | 16 | 7 | 16 | 5 | 16 | 16 | 7 |
| | | 200.0 | 15 | 4 | 15 | 15 | 6 | 15 | 4 | 15 | 15 | 6 | 15 | 4 | 15 | 15 | 6 | 16 | 5 | 16 | 16 | 7 | 16 | 5 | 16 | 16 | 7 | 16 | 5 | 16 | 16 | 7 |
| | 1/4"Φ TRU-FAST TAP GRIP CF W/ 2-1/4" MIN. EMBEDMENT (MIN. 3,000 P.S.I. CONCRETE) | 48.0 | 16 | 16 | 16 | 16 | 14 | 16 | 6 | 16 | 16 | 8 | 16 | 5 | 16 | 16 | 6 | 16 | 16 | 16 | 16 | 16 | 16 | 9 | 16 | 16 | 10 | 16 | 6 | 16 | 16 | 8 |
| | | 62.0 | 16 | 11 | 16 | 16 | 11 | 15 | 4 | 15 | 15 | 6 | 12 | 3 | 12 | 12 | 5 | 16 | 15 | 16 | 16 | 14 | 16 | 6 | 16 | 16 | 8 | 16 | 5 | 16 | 16 | 7 |
| | | 72.0 | 16 | 8 | 16 | 16 | 9 | 13 | 3 | 13 | 13 | 5 | 12 | 3 | 12 | 12 | 5 | 16 | 11 | 16 | 16 | 12 | 16 | 5 | 16 | 16 | 7 | 16 | 5 | 16 | 16 | 7 |
| | | 92.0 | 16 | 5 | 16 | 16 | 7 | 12 | 3 | 12 | 12 | 5 | 12 | 3 | 12 | 12 | 5 | 16 | 7 | 16 | 16 | 9 | 16 | 5 | 16 | 16 | 7 | 16 | 5 | 16 | 16 | 7 |
| | | 200.0 | 12 | 3 | 12 | 12 | 5 | 12 | 3 | 12 | 12 | 5 | 12 | 3 | 12 | 12 | 5 | 16 | 5 | 16 | 16 | 7 | 16 | 5 | 16 | 16 | 7 | 16 | 5 | 16 | 16 | 7 |

| EXISTING STRUCTURE | ANCHOR TYPE | LOAD (W) PSF MAX. (SEE NOTE 1) | MIN. 2" EDGE DISTANCE | | | | | | | | | | | | | | | MIN. 3" EDGE DISTANCE | | | | | | | | | | | | | | |
|---|---|---|---|---|---|---|---|---|---|---|---|---|---|---|---|---|---|---|---|---|---|---|---|---|---|---|---|---|---|---|---|---|
| | | | SPANS UP TO 5' - 0" (SEE NOTE 1) | | | | | SPANS UP TO 8' - 8" (SEE NOTE 1) | | | | | SPANS UP TO 10' - 6" (SEE NOTE 1) | | | | | SPANS UP TO 5' - 0" (SEE NOTE 1) | | | | | SPANS UP TO 8' - 8" (SEE NOTE 1) | | | | | SPANS UP TO 10' - 6" (SEE NOTE 1) | | | | |
| | | | CONNECTION TYPE | | | | | CONNECTION TYPE | | | | | CONNECTION TYPE | | | | | CONNECTION TYPE | | | | | CONNECTION TYPE | | | | | CONNECTION TYPE | | | | |
| | | | 1 | 2 | 3 | 4 | 5 | 1 | 2 | 3 | 4 | 5 | 1 | 2 | 3 | 4 | 5 | 1 | 2 | 3 | 4 | 5 | 1 | 2 | 3 | 4 | 5 | 1 | 2 | 3 | 4 | 5 |
| HOLLOW CONCRETE BLOCK | 1/4"Φ ITW TAPCON W/ 1-1/4" MINIMUM EMBEDMENT | 48.0 | 16 | 12 | 16 | 16 | 8 | 10 | 3 | 10 | 10 | 5 | 8 | | 8 | 8 | 4 | 16 | 13 | 16 | 16 | 10 | 11 | 4 | 11 | 11 | 6 | 9 | 3 | 9 | 9 | 4 |
| | | 62.0 | 14 | 6 | 14 | 14 | 6 | 8 | | 8 | 8 | 3 | 6 | | 6 | 6 | 3 | 15 | 7 | 15 | 15 | 8 | 9 | | 9 | 9 | 4 | 7 | | 7 | 7 | 3 |
| | | 72.0 | 12 | 4 | 12 | 12 | 5 | 7 | | 7 | 7 | 3 | 6 | | 6 | 6 | 3 | 13 | 5 | 13 | 13 | 6 | 7 | | 7 | 7 | 4 | 7 | | 7 | 7 | 3 |
| | | 92.0 | 9 | 3 | 9 | 9 | 4 | 6 | | 6 | 6 | 3 | 6 | | 6 | 6 | 3 | 10 | 3 | 10 | 10 | 5 | 7 | | 7 | 7 | 3 | 7 | | 7 | 7 | 3 |
| | | 200.0 | 6 | | 6 | 6 | 3 | 6 | | 6 | 6 | 3 | 6 | | 6 | 6 | 3 | 7 | | 7 | 7 | 3 | 7 | | 7 | 7 | 3 | 7 | | 7 | 7 | 3 |
| | * * 1/4"Φ ELCO MALE/ FEMALE "PANELMATE" W/ 1-1/4 MIN. EMBEDMENT & 1/4-20 MACHINE SCREW WITH NUT | 48.0 | 16 | 16 | 16 | 16 | 11 | 15 | 5 | 15 | 15 | 6 | 12 | 4 | 12 | 12 | 5 | 16 | 16 | 16 | 16 | 12 | 16 | 5 | 16 | 16 | 7 | 13 | 4 | 13 | 13 | 6 |
| | | 62.0 | 16 | 9 | 16 | 16 | 8 | 12 | 3 | 12 | 12 | 5 | 10 | | 10 | 9 | 4 | 16 | 9 | 16 | 16 | 9 | 12 | 3 | 12 | 12 | 5 | 10 | 3 | 10 | 10 | 4 |
| | | 72.0 | 16 | 7 | 16 | 16 | 7 | 10 | 3 | 10 | 10 | 4 | 10 | | 10 | 9 | 4 | 16 | 7 | 16 | 16 | 8 | 10 | 3 | 10 | 10 | 4 | 10 | 3 | 10 | 10 | 4 |
| | | 92.0 | 14 | 4 | 14 | 14 | 5 | 10 | | 10 | 9 | 4 | 10 | | 10 | 9 | 4 | 14 | 4 | 14 | 14 | 6 | 10 | 3 | 10 | 10 | 4 | 10 | 3 | 10 | 10 | 4 |
| | | 200.0 | 10 | | 10 | 9 | 4 | 10 | | 10 | 9 | 4 | 10 | | 10 | 9 | 4 | 10 | 3 | 10 | 10 | 4 | 10 | 3 | 10 | 10 | 4 | 10 | 3 | 10 | 10 | 4 |
| | * 1/4"Φ POWERS CALK-IN W/ 7/8" EMBEDMENT & 1/4-20 STAINLESS STEEL MACHINE SCREW | 48.0 | 12.5 | 12.5 | 12.5 | 12.5 | 9 | 12.5 | 4 | 12.5 | 12.5 | 5 | 11 | 3 | 11 | 11 | 4 | 12.5 | 12.5 | 12.5 | 12.5 | 12.5 | 12.5 | 6 | 12.5 | 12.5 | 8 | 12.5 | 4 | 12.5 | 12.5 | 6 |
| | | 62.0 | 12.5 | 8 | 12.5 | 12.5 | 7 | 10 | 3 | 10 | 10 | 4 | 8 | | 8 | 8 | 3 | 12.5 | 10 | 12.5 | 12.5 | 11 | 12.5 | 4 | 12.5 | 12.5 | 6 | 11 | 3 | 11 | 10 | 5 |
| | | 72.0 | 12.5 | 6 | 12.5 | 12.5 | 6 | 9 | | 9 | 9 | 3 | 8 | | 8 | 8 | 3 | 12.5 | 7 | 12.5 | 12.5 | 9 | 11 | 3 | 11 | 11 | 5 | 11 | 3 | 11 | 10 | 5 |
| | | 92.0 | 12 | 4 | 12 | 12 | 5 | 8 | | 8 | 8 | 3 | 8 | | 8 | 8 | 3 | 12.5 | 5 | 12.5 | 12.5 | 7 | 11 | 3 | 11 | 10 | 5 | 11 | 3 | 11 | 10 | 5 |
| | | 200.0 | 8 | | 8 | 8 | 3 | 8 | | 8 | 8 | 3 | 8 | | 8 | 8 | 3 | 11 | 3 | 11 | 10 | 5 | 11 | 3 | 11 | 10 | 5 | 11 | 3 | 11 | 10 | 5 |
| | 1/4"Φ POWERS ZAMAC NAIL-IN W/ 1-1/8" MIN. EMBEDMENT | 48.0 | 16 | 11 | 16 | 16 | 9 | 10 | 3 | 10 | 10 | 5 | 8 | | 8 | 8 | 4 | 16 | 13 | 16 | 16 | 10 | 11 | 4 | 11 | 11 | 6 | 9 | | 9 | 9 | 5 |
| | | 62.0 | 13 | 6 | 13 | 13 | 7 | 7 | | 7 | 7 | 4 | 6 | | 6 | 6 | 3 | 15 | 6 | 15 | 15 | 8 | 8 | | 8 | 8 | 4 | 7 | | 7 | 7 | 4 |
| | | 72.0 | 11 | 4 | 11 | 11 | 6 | 6 | | 6 | 6 | 3 | 6 | | 6 | 6 | 3 | 13 | 5 | 13 | 13 | 7 | 7 | | 7 | 7 | 4 | 7 | | 7 | 7 | 4 |
| | | 92.0 | 9 | 3 | 9 | 9 | 4 | 6 | | 6 | 6 | 3 | 6 | | 6 | 6 | 3 | 10 | 3 | 10 | 10 | 5 | 7 | | 7 | 7 | 4 | 7 | | 7 | 7 | 4 |
| | | 200.0 | 6 | | 6 | 6 | 3 | 6 | | 6 | 6 | 3 | 6 | | 6 | 6 | 3 | 7 | | 7 | 7 | 4 | 7 | | 7 | 7 | 4 | 7 | | 7 | 7 | 4 |
| | 3/8"Φ POWERS TAPPER W/ 1-1/4" MIN. EMBEDMENT | 48.0 | 16 | 16 | 16 | 16 | 16 | 16 | 8 | 16 | 16 | 9 | 16 | 6 | 16 | 16 | 7 | 16 | 16 | 16 | 16 | 16 | 16 | 9 | 16 | 16 | 11 | 16 | 6 | 16 | 16 | 9 |
| | | 62.0 | 16 | 14 | 16 | 16 | 12 | 16 | 5 | 16 | 16 | 7 | 15 | 4 | 15 | 15 | 6 | 16 | 16 | 16 | 16 | 15 | 16 | 6 | 16 | 16 | 9 | 16 | 5 | 16 | 16 | 7 |
| | | 72.0 | 16 | 10 | 16 | 16 | 10 | 15 | 4 | 15 | 15 | 6 | 15 | 4 | 15 | 15 | 6 | 16 | 12 | 16 | 16 | 13 | 16 | 5 | 16 | 16 | 7 | 16 | 5 | 16 | 16 | 7 |
| | | 92.0 | 16 | 7 | 16 | 16 | 8 | 15 | 4 | 15 | 15 | 6 | 15 | 4 | 15 | 15 | 6 | 16 | 8 | 16 | 16 | 10 | 16 | 5 | 16 | 16 | 7 | 16 | 5 | 16 | 16 | 7 |
| | | 200.0 | 15 | 4 | 15 | 15 | 6 | 15 | 4 | 15 | 15 | 6 | 15 | 4 | 15 | 15 | 6 | 16 | 5 | 16 | 16 | 7 | 16 | 5 | 16 | 16 | 7 | 16 | 5 | 16 | 16 | 7 |
| | 1/4"Φ TRU-FAST TAP GRIP CF W/ 1-1/4" MIN. EMBEDMENT | 48.0 | 16 | 12 | 16 | 16 | 9 | 10 | 3 | 10 | 10 | 5 | 8 | | 8 | 8 | 4 | 16 | 12 | 16 | 16 | 9 | 10 | 3 | 10 | 10 | 5 | 8 | | 8 | 8 | 4 |
| | | 62.0 | 14 | 6 | 14 | 14 | 7 | 8 | | 8 | 8 | 4 | 7 | | 7 | 7 | 3 | 14 | 6 | 14 | 14 | 7 | 8 | | 8 | 8 | 4 | 7 | | 7 | 7 | 3 |
| | | 72.0 | 12 | 4 | 12 | 12 | 6 | 7 | | 7 | 7 | 3 | 7 | | 7 | 7 | 3 | 12 | 4 | 12 | 12 | 6 | 7 | | 7 | 7 | 3 | 7 | | 7 | 7 | 3 |
| | | 92.0 | 9 | 3 | 9 | 9 | 4 | 7 | | 7 | 7 | 3 | 7 | | 7 | 7 | 3 | 9 | 3 | 9 | 9 | 4 | 7 | | 7 | 7 | 3 | 7 | | 7 | 7 | 3 |
| | | 200.0 | 7 | | 7 | 7 | 3 | 7 | | 7 | 7 | 3 | 7 | | 7 | 7 | 3 | 7 | | 7 | 7 | 3 | 7 | | 7 | 7 | 3 | 7 | | 7 | 7 | 3 |

## ANCHOR SCHEDULE - WITHOUT SPECIAL INSPECTION

FASTENER MAXIMUM SPACING (INCHES) REQUIRED FOR VARIOUS DESIGN LOADS AND SPANS

| EXISTING STRUCTURE | ANCHOR TYPE | LOAD (W) PSF MAX. (SEE NOTE 1) | 3/4" EDGE DISTANCE | | | | | | | | | | | | | | |
|---|---|---|---|---|---|---|---|---|---|---|---|---|---|---|---|---|---|
| | | | SPANS UP TO 5' - 0" (SEE NOTE 1) | | | | | SPANS UP TO 8' - 8" (SEE NOTE 1) | | | | | SPANS UP TO 10' - 6" (SEE NOTE 1) | | | | |
| | | | CONNECTION TYPE | | | | | CONNECTION TYPE | | | | | CONNECTION TYPE | | | | |
| | | | 1 | 2 | 3 | 4 | 5 | 1 | 2 | 3 | 4 | 5 | 1 | 2 | 3 | 4 | 5 |
| WOOD | 1/4"Φ WOOD LAG W/ 1-3/4" MIN. THREAD PENETRATION SHEAR PARALLEL OR PERPENDICULAR TO WOOD GRAIN | 48.0 | 16 | 16 | 16 | 16 | 14 | 16 | 11 | 16 | 16 | 8 | 16 | 8 | 16 | 16 | 7 |
| | | 62.0 | 16 | 16 | 16 | 16 | 11 | 16 | 7 | 16 | 16 | 6 | 16 | 6 | 16 | 16 | 5 |
| | | 72.0 | 16 | 14 | 16 | 16 | 9 | 16 | 6 | 16 | 16 | 5 | 16 | 6 | 16 | 16 | 5 |
| | | 92.0 | 16 | 9 | 16 | 16 | 7 | 16 | 6 | 16 | 16 | 5 | 16 | 6 | 16 | 16 | 5 |
| | | 200.0 | 16 | 6 | 16 | 16 | 5 | 16 | 6 | 16 | 16 | 5 | 16 | 6 | 16 | 16 | 5 |
| | * * 1/4"Φ ELCO MALE/ FEMALE "PANELMATE" W/ 1-7/8" MIN. PENETRATION & 1/4-20 MACHINE SCREW WITH NUT | 48.0 | 16 | 16 | 16 | 16 | 16 | 16 | 12 | 16 | 16 | 11 | 16 | 9 | 16 | 16 | 9 |
| | | 62.0 | 16 | 16 | 16 | 16 | 15 | 16 | 8 | 16 | 16 | 8 | 16 | 6 | 16 | 16 | 7 |
| | | 72.0 | 16 | 16 | 16 | 16 | 13 | 16 | 6 | 16 | 16 | 7 | 16 | 6 | 16 | 16 | 7 |
| | | 92.0 | 16 | 10 | 16 | 16 | 10 | 16 | 6 | 16 | 16 | 7 | 16 | 6 | 16 | 16 | 7 |
| | | 200.0 | 16 | 6 | 16 | 16 | 7 | 16 | 6 | 16 | 16 | 7 | 16 | 6 | 16 | 16 | 7 |
| | 1/4"Φ TRU-FAST TAP GRIP CF W/ 2-1/4" MIN. PENETRATION | 48.0 | 12.5 | 12.5 | 12.5 | 12.5 | 12.5 | 12.5 | 9 | 12.5 | 12.5 | 10 | 12.5 | 6 | 12.5 | 12.5 | 8 |
| | | 62.0 | 12.5 | 12.5 | 12.5 | 12.5 | 12.5 | 12.5 | 6 | 12.5 | 12.5 | 7 | 12.5 | 4 | 12.5 | 12.5 | 6 |
| | | 72.0 | 12.5 | 11 | 12.5 | 12.5 | 11 | 12.5 | 5 | 12.5 | 12.5 | 6 | 12.5 | 4 | 12.5 | 12.5 | 6 |
| | | 92.0 | 12.5 | 7 | 12.5 | 12.5 | 9 | 12.5 | 4 | 12.5 | 12.5 | 6 | 12.5 | 4 | 12.5 | 12.5 | 6 |
| | | 200.0 | 12.5 | 4 | 12.5 | 12.5 | 6 | 12.5 | 4 | 12.5 | 12.5 | 6 | 12.5 | 4 | 12.5 | 12.5 | 6 |

ANCHOR NOTES:

1. SPANS AND LOADS SHOWN HERE ARE FOR DETERMINING ANCHOR SPACING ONLY. ALLOWABLE STORM PANEL SPANS FOR SPECIFIC LOADS MUST BE LIMITED TO THOSE SHOWN IN TABLE 1, SHEET 3.
2. ENTER ANCHOR SCHEDULE BASED ON THE EXISTING STRUCTURE MATERIAL, ANCHOR TYPE AND EDGE DISTANCE. SELECT DESIGN LOAD GREATER THAN OR EQUAL TO NEGATIVE DESIGN LOAD ON STORM PANEL AND SELECT SPAN GREATER THAN OR EQUAL TO STORM PANEL SPAN.
3. EXISTING STRUCTURE MAY BE CONCRETE, HOLLOW BLOCK OR WOOD FRAMING. REFERENCE ANCHOR SCHEDULE FOR PROPER ANCHOR TYPE BASED ON TYPE OF EXISTING STRUCTURE AND APPROPRIATE CONNECTION TYPE. SEE MOUNTING SECTION DETAILS FOR IDENTIFICATION OF CONNECTION TYPE.
4. ANCHORS SHALL BE INSTALLED IN ACCORDANCE WITH MANUFACTURERS RECOMMENDATIONS.
5. MINIMUM EMBEDMENT AND EDGE DISTANCE EXCLUDES WALL FINISH OR STUCCO.
6. WHERE EXISTING STRUCTURE IS WOOD FRAMING, WOOD FRAMING CONDITIONS VARY. FIELD VERIFY THAT FASTENERS ARE INTO ADEQUATE WOOD FRAMING MEMBERS, NOT PLYWOOD. FASTENING TO PLYWOOD IS ACCEPTABLE ONLY FOR SIDE CLOSURE PIECES.
7. WHERE LAG SCREWS FASTEN TO NARROW FACE OF STUD FRAMING, FASTENER SHALL BE LOCATED IN CENTER OF NOMINAL 2" x 4" (MIN.) WOOD STUD. 3/4" EDGE DISTANCE IS ACCEPTABLE FOR WOOD FRAMING. WOOD STUD SHALL BE "SOUTHERN PINE" G=0.55 OR GREATER DENSITY. LAG SCREWS SHALL HAVE PHILLIPS PAN HEAD OR HEX HEAD.
8. MACHINE SCREWS SHALL HAVE A MINIMUM OF 1/2" ENGAGEMENT OF THREADS TO EMBEDDED CALK-IN AND MAY HAVE EITHER A PAN HEAD, TRUSS HEAD, OR WAFER HEAD (SIDEWALK BOLT), FOR DIRECT MOUNT USE ONLY SIDEWALK BOLTS OR TRUSS HEAD BOLTS. LOCATE FASTENER IN NARROW PORTION OF KEYHOLE SLOT.
9. DESIGNATES ANCHOR CONDITIONS WHICH ARE NOT ACCEPTABLE USES.
10. *DESIGNATES ANCHORS WHICH ARE REMOVABLE BY REMOVING MACHINE SCREW, NUT OR WASHERED WINGNUT. REMOVABLE ANCHORS ARE REQUIRED FOR DIRECT MOUNT @ 6-1/4" OR 12-1/2" O.C. MAX. SPACING ONLY. SPACINGS SHALL NOT EXCEED VALUE SPECIFIED IN ANCHOR SCHEDULE.

PRODUCT REVISED
as complying with the Florida
Building Code
Acceptance No 02-0315.02
Expiration Date 08/19/02
By
Miami Dade Product Control
Division


KNEZEVICH & ASSOCIATES, INC.
CONSULTING ENGINEERS • PRODUCT TESTING
1260 N. UNIVERSITY DRIVE, SUITE 180 • FORT LAUDERDALE, FL 33322
TEL: (954) 382-2800 • FAX: (954) 382-2989 • FLORIDA COA #3205
WEBSITE: WWW.KNEZEVICH.COM • E-MAIL: KA@KNEZEVICH.COM


COPYRIGHT © 2002 KNEZEVICH & ASSOCIATES, INC.


0.050" ALUMINUM STORM PANEL

Manufacturers of Hurricane & Security Protection Products
6865 N.W. 36th Avenue
Miami, Florida 33147
Phone: (305) 635-0900
Toll Free: (800) 327-0905
Fax: (305) 634-9078
HURST AWNING COMPANY, INC. "QUALITY SERVICE SINCE 1957"

V.J. KNEZEVICH
PROFESSIONAL ENGINEER
FL License No: PE 0010983

MAY 1 0 2002

revisions

| no | date | by | description |
|---|---|---|---|
| 1 | 07/20/99 | JWK | COUNTY COMMENTS |
| 2 | 05/08/02 | DLB | GENERAL NOTES |

date 06/08/1999
scale AS NOTED
drawn by MC
design by MD
checked by VJK
drawing no. 99-109
sheet 4 of 4