MIAMI-DADE

BUILDING CODE COMPLIANCE OFFICE (BCCO)
PRODUCT CONTROL DIVISION

MIAMI-DADE COUNTY, FLORIDA
METRO-DADE FLAGLER BUILDING
140 WEST FLAGLER STREET, SUITE 1603
MIAMI, FLORIDA 33130-1563
(305) 375-2901 FAX (305) 375-2908

NOTICE OF ACCEPTANCE (NOA)

Hurst Awning Co., Inc.
6865 NW 36 Ave.
Miami, FL 33147

SCOPE:

This NOA is being issued under the applicable rules and regulations governing the use of construction materials. The documentation submitted has been reviewed by Miami-Dade County Product Control Division and accepted by the Board of Rules and Appeals (BORA) to be used in Miami Dade County and other areas where allowed by the Authority Having Jurisdiction (AHJ).

This NOA shall not be valid after the expiration date stated below. The Miami-Dade County Product Control Division (In Miami Dade County) and/or the AHJ (in areas other than Miami Dade County) reserve the right to have this product or material tested for quality assurance purposes. If this product or material fails to perform in the accepted manner, the manufacturer will incur the expense of such testing and the AHJ may immediately revoke, modify, or suspend the use of such product or material within their jurisdiction. BORA reserves the right to revoke this acceptance, if it is determined by Miami-Dade County Product Control Division that this product or material fails to meet the requirements of the applicable building code.

This product is approved as described herein, and has been designed to comply with the High Velocity Hurricane Zone of the Florida Building Code.

DESCRIPTION: Aluminum Canopy Roof System with Overhead Supports

APPROVAL DOCUMENT: Drawing No. 97-201, titled "Overhead Canopy", sheets 1 through 2 of 2, prepared by V.J. Knezevich, P.E., dated 5/13/02, bearing the Miami-Dade County Product Control Revision stamp with the Notice of Acceptance number and expiration date by the Miami-Dade County Product Control Division.

MISSILE IMPACT RATING: None

LABELING: Each unit shall bear a permanent label with the manufacturer's name or logo, city, state and following statement: "Miami-Dade County Product Control Approved", unless otherwise noted herein.

RENEWAL of this NOA shall be considered after a renewal application has been filed and there has been no change in the applicable building code negatively affecting the performance of this product.

TERMINATION of this NOA will occur after the expiration date or if there has been a revision or change in the materials, use, and/or manufacture of the product or process. Misuse of this NOA as an endorsement of any product, for sales, advertising or any other purposes shall automatically terminate this NOA. Failure to comply with any section of this NOA shall be cause for termination and removal of NOA.

ADVERTISEMENT: The NOA number preceded by the words Miami-Dade County, Florida, and followed by the expiration date may be displayed in advertising literature. If any portion of the NOA is displayed, then it shall be done in its entirety.

INSPECTION: A copy of this entire NOA shall be provided to the user by the manufacturer or its distributors and shall be available for inspection at the job site at the request of the Building Official.

This NOA **revises NOA # 00-0919.11** and, consists of this page 1 as well as approval document mentioned above. The submitted documentation was reviewed by **Raul Rodriguez**

PRODUCT CONTROL ACCEPTED

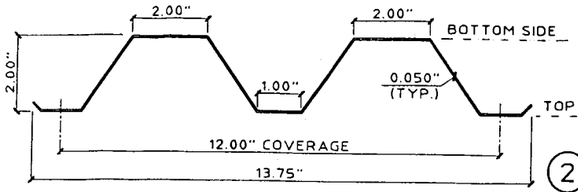

1 STORM PANEL
SCALE: 3" = 1'-0"

3003-H16 ALLOY

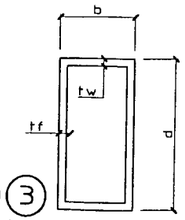

2 2a 3 3a 4 BOX BEAM
SCALE: 3" = 1'-0"

TABLE 1	STORM PANEL SPAN SCHEDULE		
LOAD CASE	WIND LOAD P.S.F.	PANEL SPAN (FT-IN)	CANOPY PROJECTION (FT-IN)
A	80	6 - 0	6 - 3
B	92	5 - 9	6 - 0
C	100	5 - 7	5 - 10
D	110	5 - 5	5 - 8
E	120	5 - 2	5 - 5

TABLE 2	SUPPORTING STRUCTURE BEAMS & BRACE SCHEDULE				
ITEM	b	d	tf	tw	LOAD CASE
2	2	4	0.125	0.125	A & B
2a	2	4	0.1875	0.1875	C, D, E
3	2	6	0.250	0.250	A, B, C
3a	2	6	0.1875	0.1875	D, E
4	2	3	0.125	0.125	ALL

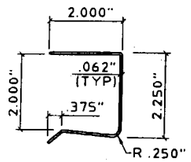

5 "U" HEADER
SCALE: 3" = 1'-0"

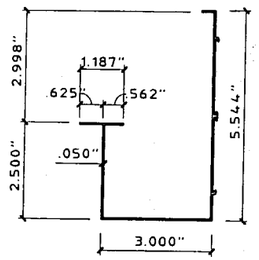

6 GUTTER
SCALE: 3" = 1'-0"

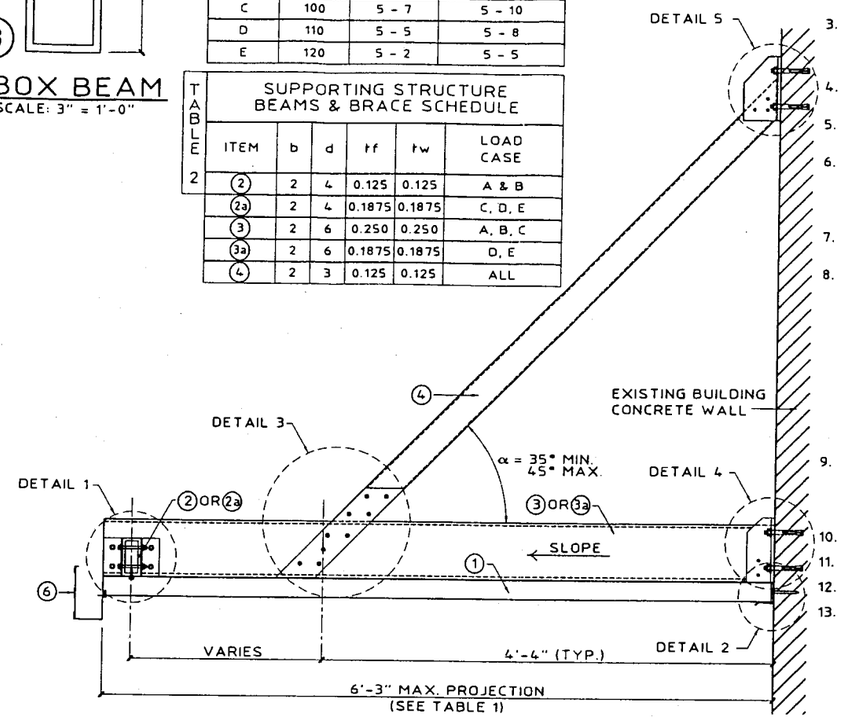

TYPICAL SIDE VIEW
SCALE: 3/4" = 1'-0"

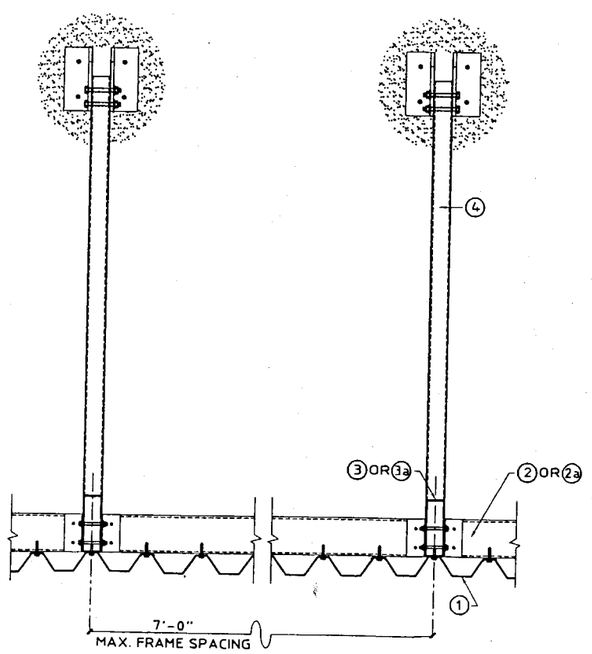

TYPICAL FRONT ELEVATION
SCALE: 3/4" = 1'-0"

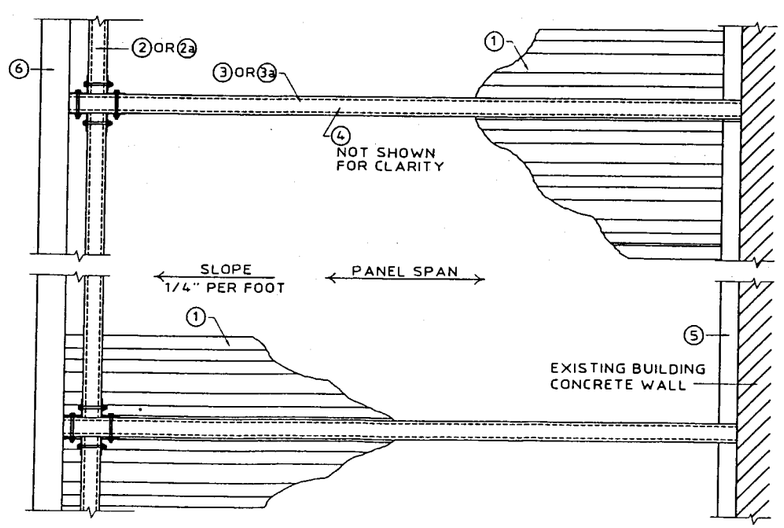

TYPICAL PLAN VIEW
SCALE: 3/4" = 1'-0"

GENERAL NOTES:

1. THESE APPROVAL DOCUMENTS REPRESENT A CANOPY SYSTEM ANALYZED WITH THE PROVISION SET FOR THE ISSUANCE OF A NOTICE OF ACCEPTANCE (NOA) BY MIAMI-DADE COUNTY PRODUCT CONTROL DIVISION FOR THE HIGH VELOCITY HURRICANE ZONE (HVHZ) OF THE FLORIDA BUILDING CODE.
2. TO VERIFY THAT THE ANCHORS AS TESTED, ARE NOT OVERSTRESSED IN THESE APPROVAL DOCUMENTS, A 33% INCREASE IN ALLOWABLE STRESS WAS USED IN THE FASTENER ANALYSIS.
3. DETERMINE THE POSITIVE AND NEGATIVE DESIGN LOADS TO USE WHEN REFERENCING THESE DOCUMENTS IN ACCORDANCE WITH THE GOVERNING CODE AND GOVERNING WIND VELOCITY. FOR WIND LOAD CALCULATIONS IN ACCORDANCE WITH ASCE 7-98, A DIRECTIONALITY FACTOR OF Kd =1.0 SHALL BE USED.
4. THESE APPROVAL DOCUMENTS ARE GENERIC AND DO NOT INCLUDE INFORMATION FOR SITE-SPECIFIC APPLICATION OF THIS SHUTTER SYSTEM.
5. THESE APPROVAL DOCUMENTS COMPLY WITH CHAPTER 61G15-23 OF THE FLORIDA ADMINISTRATIVE CODE.
6. THESE APPROVAL DOCUMENTS, ARE SUITABLE TO BE APPLIED BY THE CONTRACTOR PROVIDED THE CONTRACTOR DOES NOT DEVIATE FROM THE CONDITIONS DETAILED HEREIN AND THE CONTRACTOR VERIFIES THAT THE EXISTING STRUCTURE DOES NOT DEVIATE IN EITHER FORM OR MATERIAL FROM THE STRUCTURAL SUBSTRATES DETAILED HEREIN.
7. ANY MODIFICATIONS OR ADDITIONS TO THESE APPROVAL DOCUMENTS WILL VOID THE APPROVAL DOCUMENTS.
8. WHEN THE SITE CONDITIONS DEVIATE FROM THESE APPROVAL DOCUMENTS, THE BUILDING OFFICIAL MAY ELECT ONE OF THE FOLLOWING OPTIONS:
   A) REQUIRE THAT SITE SPECIFIC DOCUMENTS BE PREPARED, SIGNED, DATED AND SEALED BY A LICENSED ENGINEER OR REGISTERED ARCHITECT, WHICH DETAIL AND JUSTIFY THE DEVIATION. SAID DOCUMENTS SHALL BE SUBMITTED TO THE PRODUCT ENGINEER FOR REVIEW AS A CONDITION TO THE BUILDING OFFICIAL GRANTING HIS/HER APPROVAL.
   B) REQUIRE THAT A ONE-TIME SITE SPECIFIC APPROVAL BE APPLIED FOR AND SECURED FROM THE MIAMI-DADE COUNTY PRODUCT CONTROL DIVISION

   WHEN THE SITE CONDITION DEVIATIONS OCCUR WITHIN THE HIGH VELOCITY HURRICANE ZONE AREAS ONLY OPTION "B" SHALL BE ACCEPTED BY THE BUILDING OFFICIAL.
9. DESIGN LOADS:
   PANEL DEAD LOAD 1.00 P.S.F.
   LIVE LOAD 30 P.S.F.
   WIND LOAD NEGATIVE FROM -80 P.S.F. TO -120 P.S.F.
   (SEE LOAD CASES, TABLE 1)
10. DEFLECTION FOR ALL MEMBERS L/180.
11. ALL ALUMINUM STRUCTURAL MEMBERS SHALL BE OF 6063-T6 ALLOY.
12. ALL CONNECTORS (ANGLES AND PLATES) SHALL BE 6063-T6 ALUMINUM ALLOY.
13. ALL SCREWS AND BOLTS SHALL BE 2024-T4 ALUMINUM ALLOY OR GALVANIZED STEEL WITH A MIN. Fy = 36 KSI.

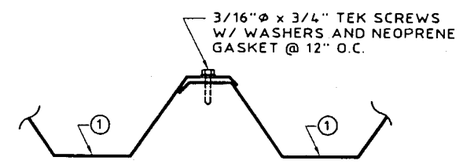

TYPICAL PANEL TO PANEL CONNECTION (@ OVERLAP)
SCALE: 3" = 1'-0"

PRODUCT REVISED
as complying with the Florida Building Code
Acceptance No 02-0315.06
Expiration Date 09/18/05
By
Miami Dade Product Control Division

KNEZEVICH & ASSOCIATES, INC.
CONSULTING ENGINEERS • PRODUCT TESTING
1260 N. UNIVERSITY DRIVE, SUITE 180 • FORT LAUDERDALE, FL 33322
TEL: (954) 382-2800 • FAX: (954) 382-2989 • FLORIDA COA #3205
WEBSITE: WWW.KNEZEVICH.COM • E-MAIL: KA@KNEZEVICH.COM

COPYRIGHT © 2002 KNEZEVICH & ASSOCIATES, INC

OVERHEAD CANOPY

HURST AWNING COMPANY, INC. "QUALITY SERVICE SINCE 1957"
Manufacturers of Hurricane & Security Protection Products
6865 N.W. 36th Avenue
Miami, Florida 33147
Phone: (305) 635-0900
Toll Free: (800) 327-0905
Fax: (305) 634-9078

V.J. KNEZEVICH
PROFESSIONAL ENGINEER
FL License No: PE 0010983

MAY 14 2002

revisions

no	date	by	description
1	09/02/97	ZS	REVISED UPON BCCO COMMENTS
2	05/13/02	OLB	GENERAL NOTES

date 03/27/1997	
scale AS NOTED	drawn by GG
design by ZS	checked by VJK
drawing no. 97-201	
sheet 1 of 2	

Print Information: J:\CADD\Cadd97\HURST\97-201\DADE\R2-sub\97-201-01.dwg AVazquez 05/13/2002 04:11:21pm
05/13/02 16:11

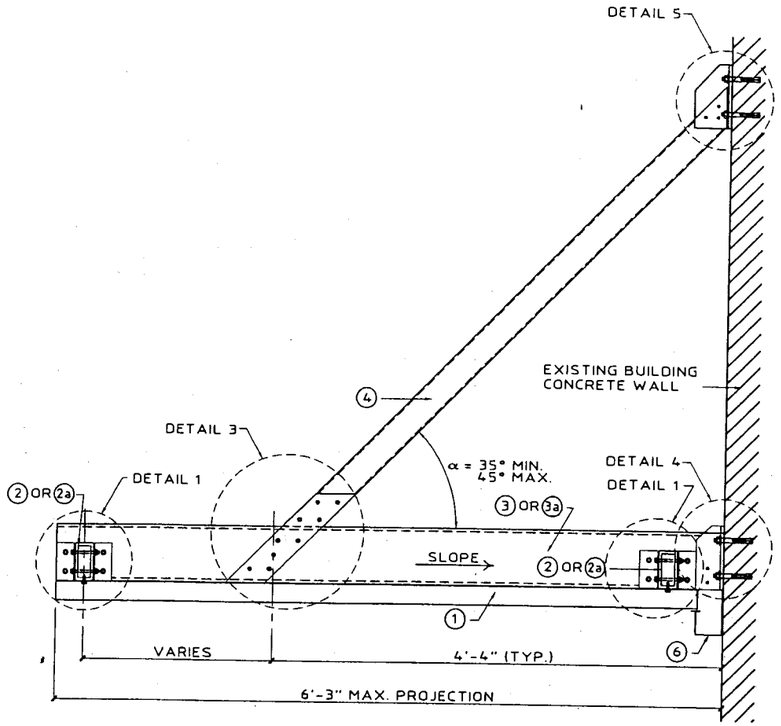

TYPICAL SIDE VIEW

SCALE: 3/4" = 1'-0"

(SEE FRONT ELEVATION ON SHEET 1)

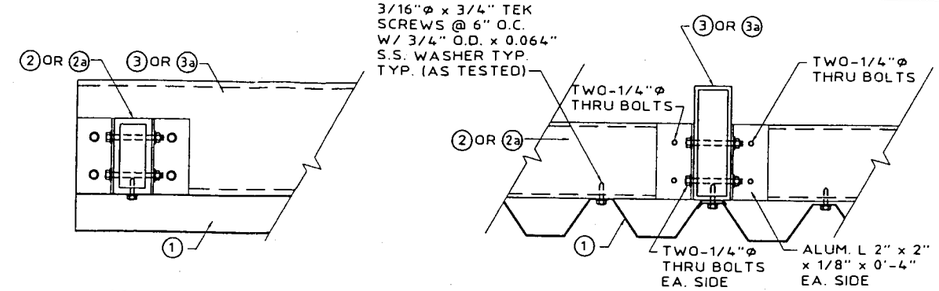

(SIDE VIEW)

(FRONT VIEW)

DETAIL 1

SCALE: 1-1/2" = 1'-0"

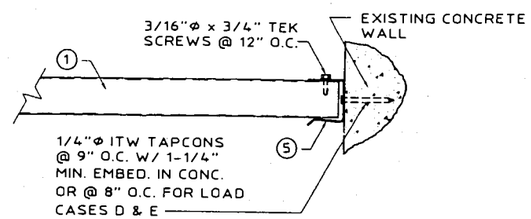

DETAIL 2

SCALE: 1-1/2" = 1'-0"

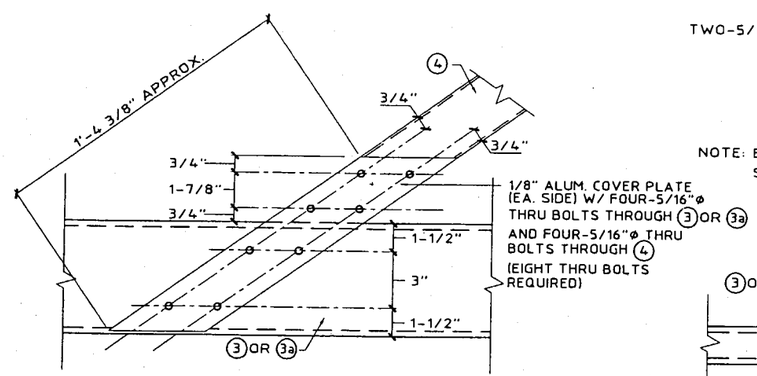

DETAIL 3

SCALE: 1-1/2" = 1'-0"

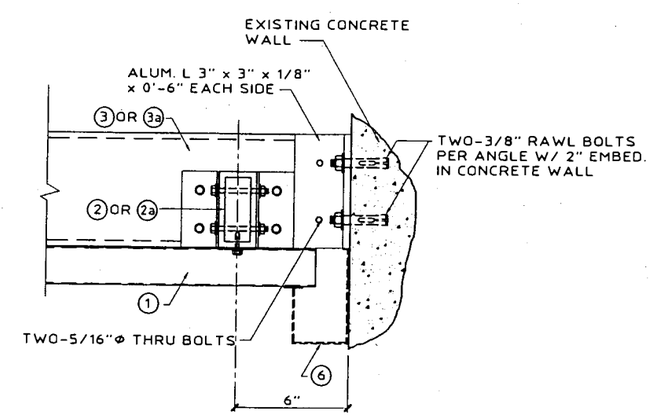

(ELEVATION)

NOTE: BEAM 2 TO FRAME 3 CONNECTION SAME AS SHOWN ON DETAIL 1, ABOVE

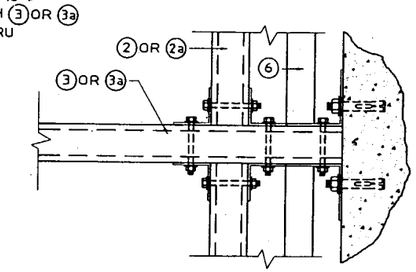

(PLAN)

DETAIL 4

SCALE: 1-1/2" = 1'-0"

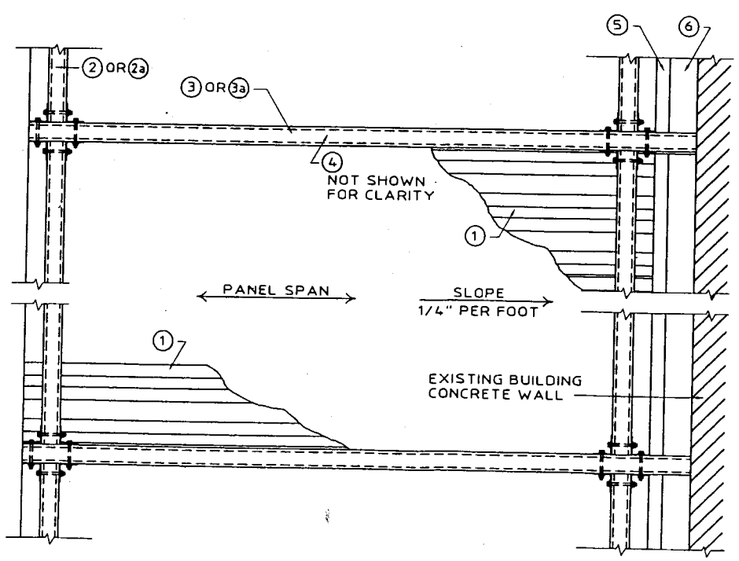

TYPICAL PLAN VIEW

SCALE: 3/4" = 1'-0"

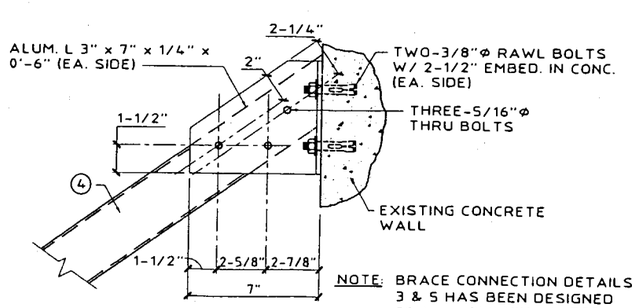

NOTE: BRACE CONNECTION DETAILS 3 & 5 HAS BEEN DESIGNED FOR α = 35° MIN. ALTERNATE SLOPE OF BRACE NEEDS TO BE BE REDRAWN.

DETAIL 5

SCALE: 1-1/2" = 1'-0"

PRODUCT REVISED
as complying with the Florida Building Code
Acceptance No 02-0315.06
Expiration Date 09/18/05
By
Miami Dade Product Control Division

KNEZEVICH & ASSOCIATES, INC.
CONSULTING ENGINEERS • PRODUCT TESTING
1260 N. UNIVERSITY DRIVE, SUITE 180 • FORT LAUDERDALE, FL 33322
TEL: (954) 382-2800 • FAX: (954) 382-2989 • FLORIDA COA #3205
WEBSITE: WWW.KNEZEVICH.COM • E-MAIL: KA@KNEZEVICH.COM

COPYRIGHT © 2002 KNEZEVICH & ASSOCIATES, INC

OVERHEAD CANOPY

Manufacturers of Hurricane & Security Protection Products
HURST AWNING COMPANY, INC. "QUALITY SERVICE SINCE 1937"
6865 N.W. 36th Avenue
Miami, Florida 33147
Phone: (305) 635-0900
Toll Free: (800) 327-0905
Fax: (305) 634-9078

V.J. KNEZEVICH
PROFESSIONAL ENGINEER
FL License No: PE-0010983

MAY 14 2002

revisions

no	date	by	description
1	09/02/97	ZS	REVISED UPON BCCO COMMENTS
2	05/13/02	OLB	GENERAL NOTES

date 03/27/1997

scale AS NOTED | drawn by GG

design by ZS | checked by VJK

drawing no. **97-201**

sheet 2 of 2

Print Information: J:\CADD\Cadd97\HURST\97-201\DADE\R2-sub\97-201-02.dwg AVazquez 05/13/2002 04:15:26pm
05/13/02 16:15