MIAMI-DADE

BUILDING CODE COMPLIANCE OFFICE (BCCO)
PRODUCT CONTROL DIVISION

MIAMI-DADE COUNTY, FLORIDA
METRO-DADE FLAGLER BUILDING
140 WEST FLAGLER STREET, SUITE 1603
MIAMI, FLORIDA 33130-1563
(305) 375-2901 FAX (305) 375-2908

NOTICE OF ACCEPTANCE (NOA)

Hurst Awning Company, Inc.
6865 NW 36th Ave.
Miami, FL 33147

SCOPE:

This NOA is being issued under the applicable rules and regulations governing the use of construction materials. The documentation submitted has been reviewed by Miami-Dade County Product Control Division and accepted by the Board of Rules and Appeals (BORA) to be used in Miami Dade County and other areas where allowed by the Authority Having Jurisdiction (AHJ).

This NOA shall not be valid after the expiration date stated below. The Miami-Dade County Product Control Division (In Miami Dade County) and/or the AHJ (in areas other than Miami Dade County) reserve the right to have this product or material tested for quality assurance purposes. If this product or material fails to perform in the accepted manner, the manufacturer will incur the expense of such testing and the AHJ may immediately revoke, modify, or suspend the use of such product or material within their jurisdiction. BORA reserves the right to revoke this acceptance, if it is determined by Miami-Dade County Product Control Division that this product or material fails to meet the requirements of the applicable building code.

This product is approved as described herein, and has been designed to comply with the High Velocity Hurricane Zone of the Florida Building Code.

DESCRIPTION: Super Extruded Aluminum Roll-Up Shutter

APPROVAL DOCUMENT: Drawing No. 95-187, titled "Super Roll-Up Shutter", sheets 1 through 10, prepared, signed and sealed by V.J. Knezevich, P.E., dated 5/14/02, bearing the Miami-Dade County Product Control Revision stamp with the Notice of Acceptance number and expiration date by the Miami-Dade County Product Control Division.

MISSILE IMPACT RATING: Large and Small Missile Impact

LABELING: Each unit shall bear a permanent label with the manufacturer's name or logo, city, state and following statement: "Miami-Dade County Product Control Approved", unless otherwise noted herein.

RENEWAL of this NOA shall be considered after a renewal application has been filed and there has been no change in the applicable building code negatively affecting the performance of this product.

TERMINATION of this NOA will occur after the expiration date or if there has been a revision or change in the materials, use, and/or manufacture of the product or process. Misuse of this NOA as an endorsement of any product, for sales, advertising or any other purposes shall automatically terminate this NOA. Failure to comply with any section of this NOA shall be cause for termination and removal of NOA.

ADVERTISEMENT: The NOA number preceded by the words Miami-Dade County, Florida, and followed by the expiration date may be displayed in advertising literature. If any portion of the NOA is displayed, then it shall be done in its entirety.

INSPECTION: A copy of this entire NOA shall be provided to the user by the manufacturer or its distributors and shall be available for inspection at the job site at the request of the Building Official.
This NOA **revises NOA # 01-1226.01** and, consists of this page 1 as well as approval document mentioned above.
The submitted documentation was reviewed by **Raul Rodriguez.**

PRODUCT CONTROL ACCEPTED

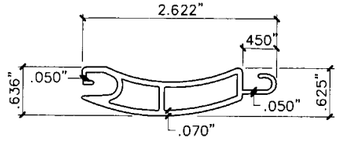

1 ROLL-UP SLAT
HALF SIZE
6063-T6 ALUMINUM ALLOY

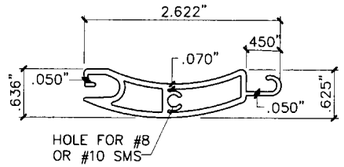

1a ALT. ROLL-UP SLAT
HALF SIZE
6063-T6 ALUMINUM ALLOY

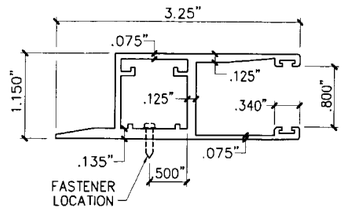

2 ALT. SIDE RAIL
HALF SIZE
6063-T6 ALUMINUM ALLOY

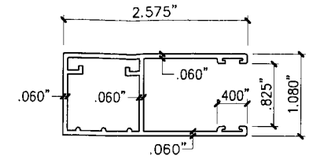

2a ALT. SIDE RAIL
HALF SIZE
6063-T6 ALUMINUM ALLOY
MAX. DESIGN LOAD = + 80 PSF
- 135 PSF

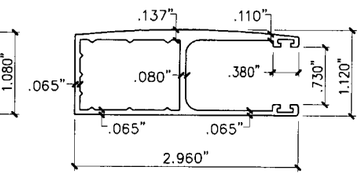

2b ALT. SIDE RAIL
HALF SIZE
6063-T6 ALUMINUM ALLOY

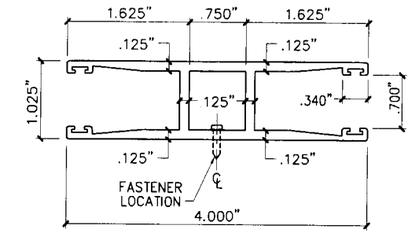

3 SIDE RAIL
HALF SIZE
6063-T6 ALUMINUM ALLOY

GENERAL NOTES:

1. THESE APPROVAL DOCUMENTS REPRESENT A SHUTTER SYSTEM ANALYZED WITH THE PROVISION SET FOR THE ISSUANCE OF A NOTICE OF ACCEPTANCE (NOA) BY MIAMI-DADE COUNTY PRODUCT CONTROL DIVISION FOR THE HIGH VELOCITY HURRICANE ZONE (HVHZ) OF THE FLORIDA BUILDING CODE.
2. TO VERIFY THAT THE ANCHORS AS TESTED, ARE NOT OVERSTRESSED IN THESE APPROVAL DOCUMENTS, A 33% INCREASE IN ALLOWABLE STRESS WAS USED IN THE FASTENER ANALYSIS.
3. DETERMINE THE POSITIVE AND NEGATIVE DESIGN LOADS TO USE WHEN REFERENCING THESE DOCUMENTS IN ACCORDANCE WITH THE GOVERNING CODE AND GOVERNING WIND VELOCITY. FOR WIND LOAD CALCULATIONS IN ACCORDANCE WITH ASCE 7-98, A DIRECTIONALITY FACTOR OF Kd =1.0 SHALL BE USED.
4. THESE APPROVAL DOCUMENTS ARE GENERIC AND DO NOT INCLUDE INFORMATION FOR SITE-SPECIFIC APPLICATION OF THIS SHUTTER SYSTEM.
5. THESE APPROVAL DOCUMENTS COMPLY WITH CHAPTER 61G15-23 OF THE FLORIDA ADMINISTRATIVE CODE.
6. THESE APPROVAL DOCUMENTS, ARE SUITABLE TO BE APPLIED BY THE CONTRACTOR PROVIDED THE CONTRACTOR DOES NOT DEVIATE FROM THE CONDITIONS DETAILED HEREIN AND THE CONTRACTOR VERIFIES THAT THE EXISTING STRUCTURE DOES NOT DEVIATE IN EITHER FORM OR MATERIAL FROM THE STRUCTURAL SUBSTRATES DETAILED HEREIN.
7. ANY MODIFICATIONS OR ADDITIONS TO THESE APPROVAL DOCUMENTS WILL VOID THE APPROVAL DOCUMENTS.
8. WHEN THE SITE CONDITIONS DEVIATE FROM THESE APPROVAL DOCUMENTS, THE BUILDING OFFICIAL MAY ELECT ONE OF THE FOLLOWING OPTIONS:
   A) REQUIRE THAT SITE SPECIFIC DOCUMENTS BE PREPARED, SIGNED, DATED AND SEALED BY A LICENSED ENGINEER OR REGISTERED ARCHITECT, WHICH DETAIL AND JUSTIFY THE DEVIATION. SAID DOCUMENTS SHALL BE SUBMITTED TO THE PRODUCT ENGINEER FOR REVIEW AS A CONDITION TO THE BUILDING OFFICIAL GRANTING HIS/HER APPROVAL.
   B) REQUIRE THAT A ONE-TIME SITE SPECIFIC APPROVAL BE APPLIED FOR AND SECURED FROM THE MIAMI-DADE COUNTY PRODUCT CONTROL DIVISION

   WHEN THE SITE CONDITION DEVIATIONS OCCUR WITHIN THE HIGH VELOCITY HURRICANE ZONE AREAS ONLY OPTION "B" SHALL BE ACCEPTED BY THE BUILDING OFFICIAL.
9. EACH SHUTTER ASSEMBLY SHALL BE PERMANENTLY LABELED ON THE HOOD OR GUIDE RAIL AS FOLLOWS:
   HURST AWNING CO., INC.
   MIAMI, FLORIDA
   MIAMI-DADE COUNTY PRODUCT CONTROL APPROVED
10. ALL EXTRUSIONS SHALL BE 6063-T6 ALUMINUM ALLOY, U.O.N
11. ALL BOLTS AND WASHERS SHALL BE GALVANIZED OR STAINLESS STEEL WITH A MINIMUM TENSILE STRENGTH OF 33 K.S.I., U.O.N. POP RIVETS SHALL BE 3/16" DIA. 5052 ALUMINUM ALLOY.
12. DESIGN CRITERIA FOR MULTIPLE SPANS:
    A. MAXIMUM DEFLECTION OF OUTSIDE HEADERS = L/30
    B. MAXIMUM DEFLECTION OF POSITIVE (INSIDE) STORM BARS = L/30 OR 2 INCHES
    C. MAXIMUM DEFECTION OF NEGATIVE (OUTSIDE) STORMS BARS = L/30
    D. MAXIMUM POSITIVE DEFLECTION OF SLATS = L/30 OR 2 INCHES; NEGATIVE DEFLECTION OF SLATS = L/30
    E. MAXIMUM DEFLECTION OF MULLIONS = L/30
13. MINIMUM SLAT ENGAGEMENT IS 1-1/4"
14. ONCE ALL SHUTTER SYSTEM COMPONENTS HAVE BEEN CHOSEN, CHECK FOR COMPLIANCE WITH THE PROVISION OF HIGH VELOCITY HURRICANE ZONES (HVHZ), SECTION 1612.1(9), OF THE FLORIDA BUILDING CODE 2001.

INDEX

SHEET NO.	DESCRIPTION
1	GENERAL NOTES - COMPONENTS
2	SIDE RAIL CONNECTIONS & SECTIONS
3	TYPICAL ELEVATIONS & SECTIONS
4	SLAT SPAN SCHEDULE - HEADER - DRUM SUPPORT
5	ANCHOR SCHEDULE
6	NEGATIVE (EXTERIOR) STORM BAR SCHEDULE
7	POSITIVE (INTERIOR) STORM BAR SCHEDULE
8	PERMANENT MULLION SCHEDULE
9	HEADER SCHEDULE (40 PSF TO 140 PSF DESIGN LOADS)
10	HEADER SCHEDULE (150 PSF TO 230 PSF DESIGN LOADS)

INSTRUCTIONS:

DETERMINE ASCE 7-98 WIND LOAD ON OPENING TO BE COVERED WITH A ROLL UP SHUTTER.

DETERMINE THE SLAT SPAN THAT YOU WILL NEED TO COVER THE OPENING.

DETERMINE IF YOU WILL NEED A SINGLE SPAN, DOUBLE SPAN OR THREE OR MORE SPANS TO COVER THE OPENING.

SINGLE SLAT SPANS
FOR A SINGLE SPAN, SEE SCHEDULE 'B', ALLOWABLE SLAT SPANS ON PAGE 4. LOCATE THE DESIGN WIND LOAD, AND THEN READ THE ALLOWABLE SLAT SPAN.

MULTIPLE SLAT SPANS WITH STORM BARS
FOR MULTIPLE SPANS, UTILIZING STORM BARS, SEE SCHEDULES F & G ON PAGE 6 & 7 FOR POSITIVE & NEGATIVE DESIGN WIND LOADS AND STORM BARS. THE LAST ROW OF EACH DESIGN LOAD INDICATES THE MAX. ALLOWABLE SLAT SPAN. UTILIZING THAT OR A LESSER SLAT SPAN, READ SCHEDULE HORIZONTALLY FROM LEFT TO RIGHT, UNTIL YOU FIND A STORM BAR SIZE AND HEIGHT THAT FITS THE OPENING.

MULLIONS
FOR ALLOWABLE SLAT SPANS, UTILIZING A PERMANENT MULLION, SEE SCHEDULE 'H' ON PAGE 8. SELECT YOUR DESIGN WIND LOAD. THE LAST ROW OF EACH DESIGN LOAD INDICATES THE MAX. ALLOWABLE SLAT SPAN. UTILIZING THAT OR A LESSER SPAN, READ FROM LEFT TO RIGHT AND SELECT THE PERMANENT MULLION THAT HAS SUFFICIENT HEIGHT FOR YOUR OPENING.

FOR PROPER CONNECTIONS AT THE TOP AND BOTTOM OF STORM BARS AND MULLIONS, SEE SCHEDULE 'C' OR 'D', PAGE 5. EACH STORM BAR AND MULLION SCHEDULE HAS REACTION LOADS INDICATED ON THE SCHEDULE TO THE RIGHT OF THE ALLOWABLE SPAN. TAKE THAT NUMBER AND ENTER SCHEDULE 'C' FOR A TENSION CONNECTION OR SCHEDULE 'D' FOR A SHEAR CONNECTION TO DETERMINE THE TYPE AND SIZE OF ANCHOR AS WELL AS THE EMBEDMENT INTO CONCRETE, CONCRETE BLOCK OR WOOD. THIS SCHEDULE WILL ALSO GIVE YOU THE SIZE AND THICKNESS OF THE ALUMINUM ANGLES TO BE USED AS WELL AS THE TEK SCREW ATTACHMENT OF THE ANGLE TO THE STORM BAR.

HEADERS
HEADERS FOR STORM BARS CAN BE FOUND IN SCHEDULE 'I' ON PAGE 9 & 10. SELECT THE DESIGN WIND LOAD AND ENTER SCHEDULE 'I'. NOTE THAT THE MAXIMUM ALLOWABLE OPENING HEIGHT IS SHOWN AT THE TOP OF THE SCHEDULE. READ ACROSS FROM LEFT TO RIGHT FROM YOUR DESIGN WIND LOAD UNTIL YOU INTERSECT THE COLUMN THAT SHOWS YOUR SELECTED OPENING HEIGHT. SEVERAL STORM BAR SIZES ARE IN THE SCHEDULE. YOU MAY CHOOSE FROM THE COLUMN THAT BEST MEETS YOUR REQUIREMENTS.

CONNECTIONS FOR HEADERS MAY ALSO BE FOUND IN SCHEDULES 'C' AND 'D' (SEE REACTIONS FOR HEADERS IN HEADER REACTION SCHEDULE E, PAGE 5.

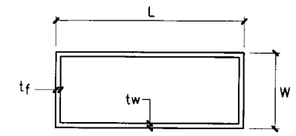

BOX BEAM (TYP A)
4 5 7 9 10 12 13 18 21 22

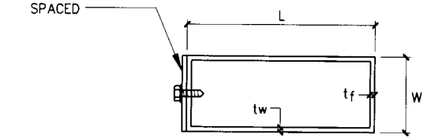

BOX BEAM W/ STRAP (TYPE B)
6 8 11

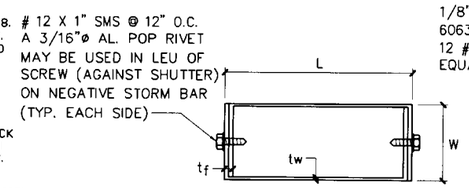

LAP BEAM (TYPE C)
14

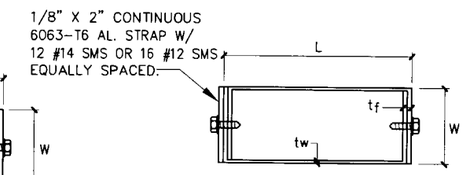

LAP BEAM W/ STRAP (TYPE D)
15

A MEMBER SCHEDULE
SCALE: 3" = 1'-0"
6063-T6 ALUMINUM ALLOY

STORM BAR, HEADER, MULLION, BUILDOUT AND ANGLE MEMBER - SCHEDULE A						
MEMBER MARK	MEMBER TYPE	W (INCHES)	L (INCHES)	Tf (INCHES)	Tw (INCHES)	2" x 1/8" AL. STRAP REQUIRED
4	A	1-1/2	3	.250	.125	
5	A	2	3	.125	.125	
6	B	2	3	.125	.125	YES *
7	A	2	4	.125	.125	
8	B	2	4	.125	.125	YES *
9	A	2	4	.250	.250	
10	A	2	5	.125	.125	
11	B	2	5	.125	.125	YES *
12	A	2	6	.125	.125	
13	A	2	7	.125	.125	
14	C	2	9	.224	.072	
15	D	2	9	.224	.072	YES *
16	ANGLE	2 MIN.	2 MIN.	.125	.125	
17	ANGLE	2 MIN.	2 MIN.	.250	.250	
18	A	2	2	.125	.125	
19	A	3	3	.125	.125	
20	B	4	4	.125	.125	
21	A	1	2	.250	.093	
22	A	2	2	.125	.125	

* ONE CONTINUOUS STRAP REQUIRED ON THE OUTSIDE SURFACE OF OUTSIDE STORM BAR ONLY.

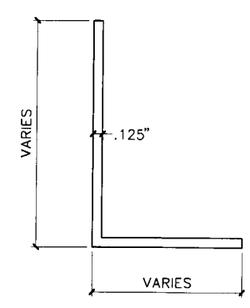

16 ANGLE
HALF SIZE
6063-T6 ALUMINUM ALLOY

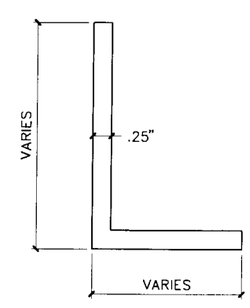

17 ANGLE
HALF SIZE
6063-T6 ALUMINUM ALLOY

PRODUCT REVISED
as complying with the Florida
Building Code
Acceptance No. 02-0315.07
Expiration Date February 8, 2007
By
Miami Dade Product Control
Division

KNEZEVICH & ASSOCIATES, INC.
CONSULTING ENGINEERS • PRODUCT TESTING
1260 N. UNIVERSITY DRIVE, SUITE 180 • FORT LAUDERDALE, FL 33322
TEL: (954) 382-2800 • FAX: (954) 382-2989 • FLORIDA COA #3205
WEBSITE: WWW.KNEZEVICH.COM • E-MAIL: KA@KNEZEVICH.COM

COPYRIGHT © 2002 KNEZEVICH & ASSOCIATES, INC

SUPER ROLL-UP SHUTTER

HURST AWNING COMPANY, INC.
QUALITY SERVICE SINCE 1957
Manufacturers of Hurricane & Security Protection Products
6865 N.W. 36th Avenue
Miami, Florida 33147
Phone: (305) 635-0900
Toll Free: (800) 327-0905
Fax: (305) 634-9078

V.J. KNEZEVICH
PROFESSIONAL ENGINEER
FL License No. PE 0010983

MAY 14 2002

revisions

no	date	by	description
1	11/30/95		COUNTY COMMENTS
2	05/14/02	DLB	GENERAL NOTES

date 08/22/1996
scale AS NOTED
drawn by J.W. HILL
design by VJK
checked by VJK
drawing no. 95-187
sheet 1 of 10

Print Information: J:\CADD\Cadd95\HURST\95-187\R2-sub\95-187-01.dwg AVazquez 05/14/2002 03:07:00pm
05/14/02 14:17

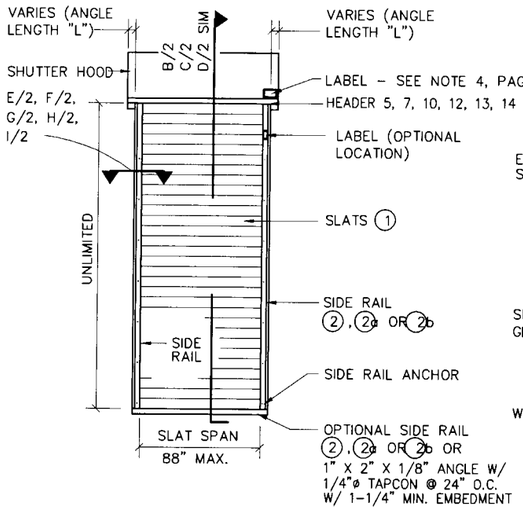

A ELEVATION OF SINGLE SPAN CONDITION 1
N.T.S.

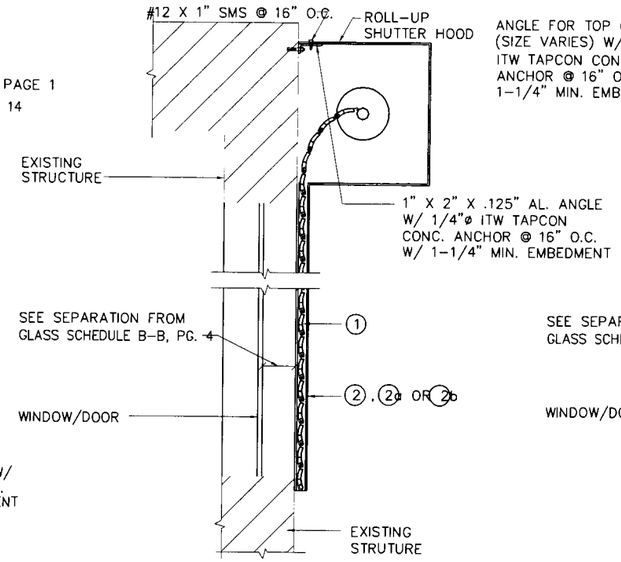

B WALL MOUNT SECTION 1
SCALE : 3/4" = 1'-0"

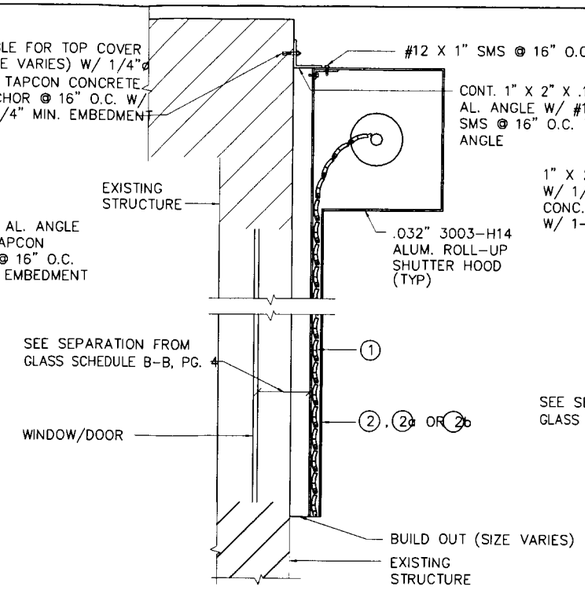

C BUILD OUT SECTION 1
SCALE : 3/4" = 1'-0"

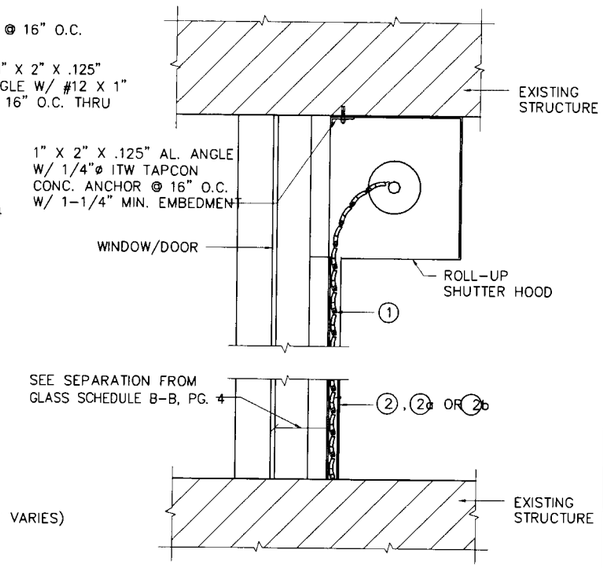

D INSIDE MOUNT SECTION 1
SCALE : 3/4" = 1'-0"

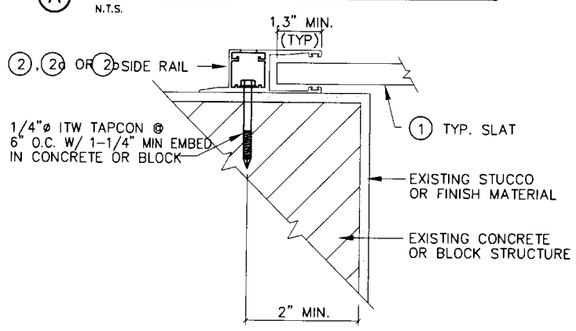

E WALL MOUNT (PLAN)
SCALE : 3" = 1'-0"

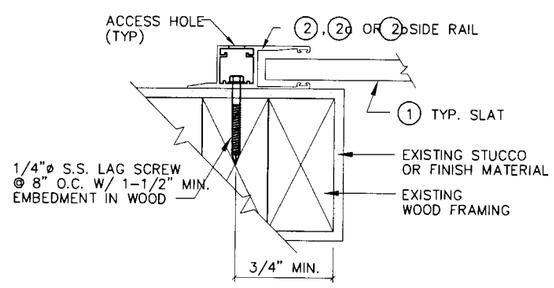

F WOOD FRAME WALL MOUNT (PLAN)
SCALE : 3" = 1'-0"

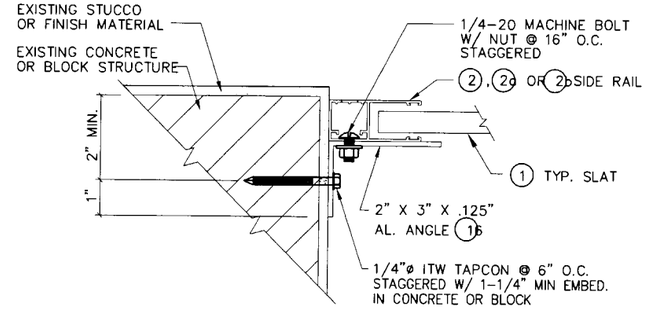

G INSIDE MOUNT (PLAN)
SCALE : 3" = 1'-0"

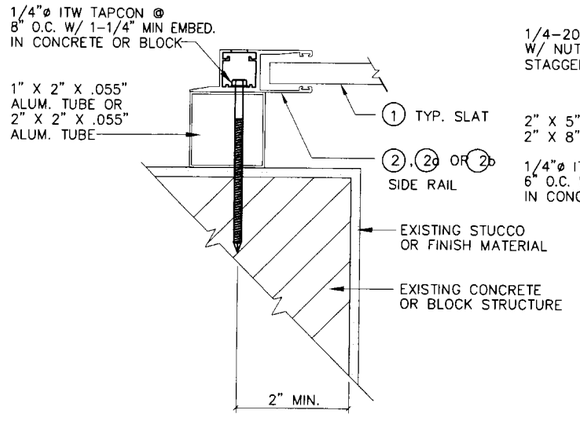

H BUILD-OUT MOUNT (PLAN)
SCALE : 3" = 1'-0"

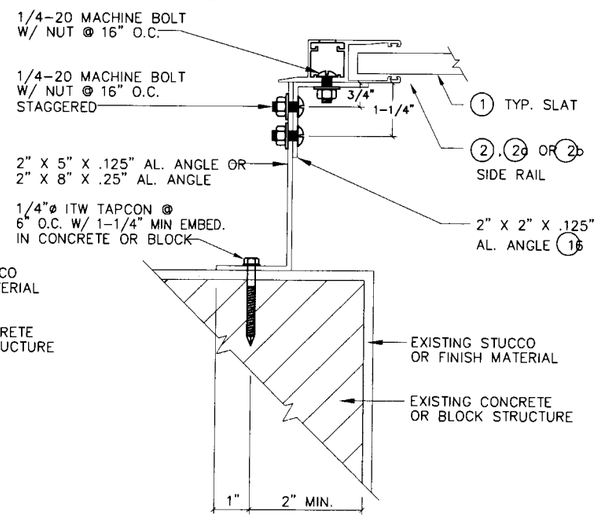

I BUILD-OUT MOUNT (PLAN)
SCALE : 3" = 1'-0"

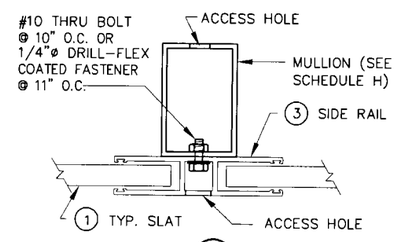

J

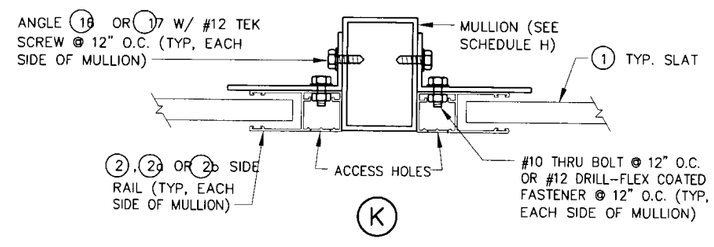

K

SIDE RAIL TO MULLION DETAILS
SCALE : 3" = 1'-0"

PRODUCT REVISED
as complying with the Florida Building Code
Acceptance No. 02-0315.07
Expiration Date February 8, 2007
By
Miami Dade Product Control Division

KNEZEVICH & ASSOCIATES, INC.
CONSULTING ENGINEERS • PRODUCT TESTING
1260 N. UNIVERSITY DRIVE, SUITE 180 • FORT LAUDERDALE, FL 33322
TEL: (954) 382-2800 • FAX: (954) 382-2989 • FLORIDA COA #3205
WEBSITE: WWW.KNEZEVICH.COM • E-MAIL: KA@KNEZEVICH.COM

COPYRIGHT © 2002 KNEZEVICH & ASSOCIATES, INC

SUPER ROLL-UP SHUTTER

HURST AWNING COMPANY, INC.
Manufacturers of Hurricane & Security Protection Products
6865 N.W. 36th Avenue
Miami, Florida 33147
Phone: (305) 635-0900
Toll Free: (800) 327-0905
Fax: (305) 634-9078
QUALITY SERVICE SINCE 1957

V.J. KNEZEVICH
PROFESSIONAL ENGINEER
FL License No: PE 0010983

MAY 14 2002

revisions

no	date	by	description
1	11/30/95		COUNTY COMMENTS
2	05/14/02	OLB	GENERAL NOTES

date 08/22/1996
scale AS NOTED | drawn by J.W. HILL
design by VJK | checked by VJK
drawing no. 95-187
sheet 2 of 10

Print Information: J:\CADD\Cadd95\HURST\95-187\R2-sub\95-187-02.dwg AVazquez 05/14/2002 02:17:44pm
05/14/02 14:17

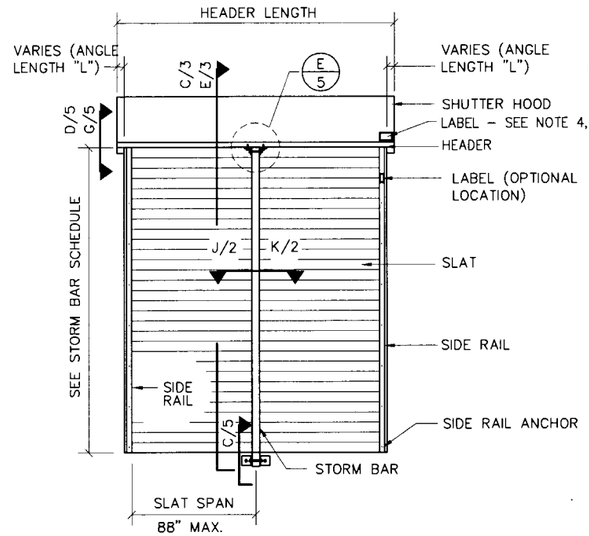

Ⓐ WALL MOUNT & BUILD OUT ELEVATION 1
N.T.S.

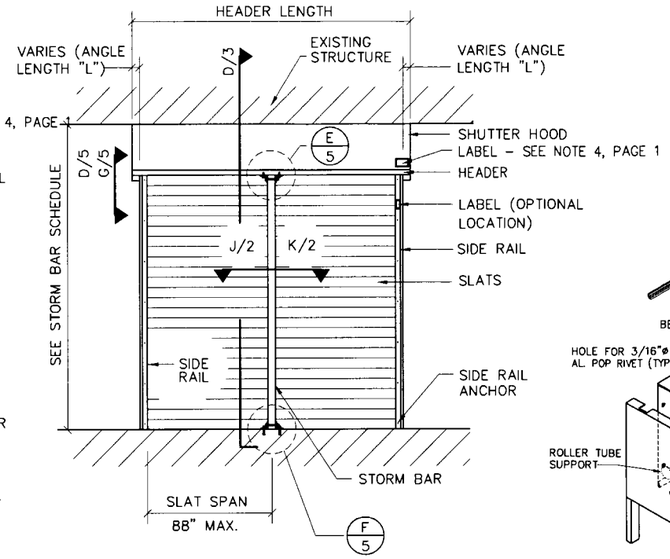

Ⓑ INSIDE MOUNT ELEVATION 1
N.T.S.

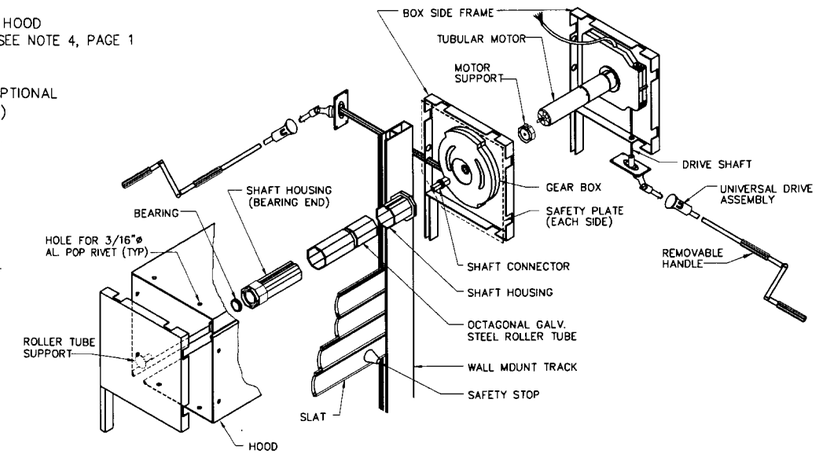

ISOMETRIC OF CAST HEADER ASSEMBLY
N.T.S.

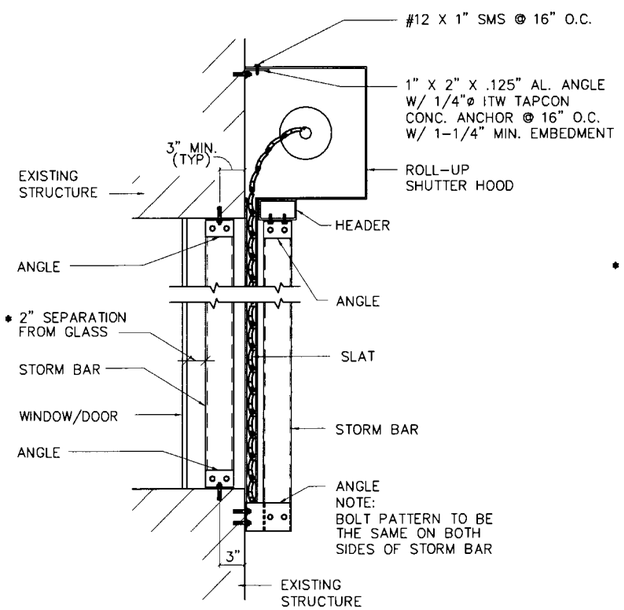

Ⓒ WALL MOUNT SECTION W/ STORM BAR
SCALE : 3/4" = 1'-0"

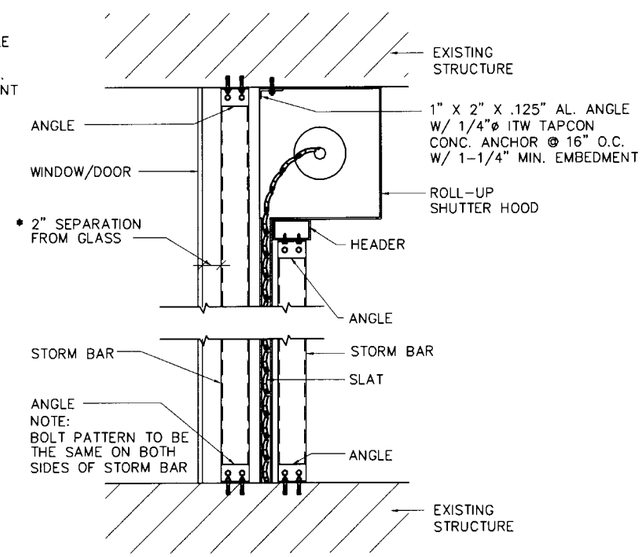

Ⓓ INSIDE MOUNT SECTION W/ STORM BAR
SCALE : 3/4" = 1'-0"

* 1-1/2" SEPARATION MAY BE USED WHEN POSITIVE LOADED STORM BARS FROM SCHEDULE G ARE USED

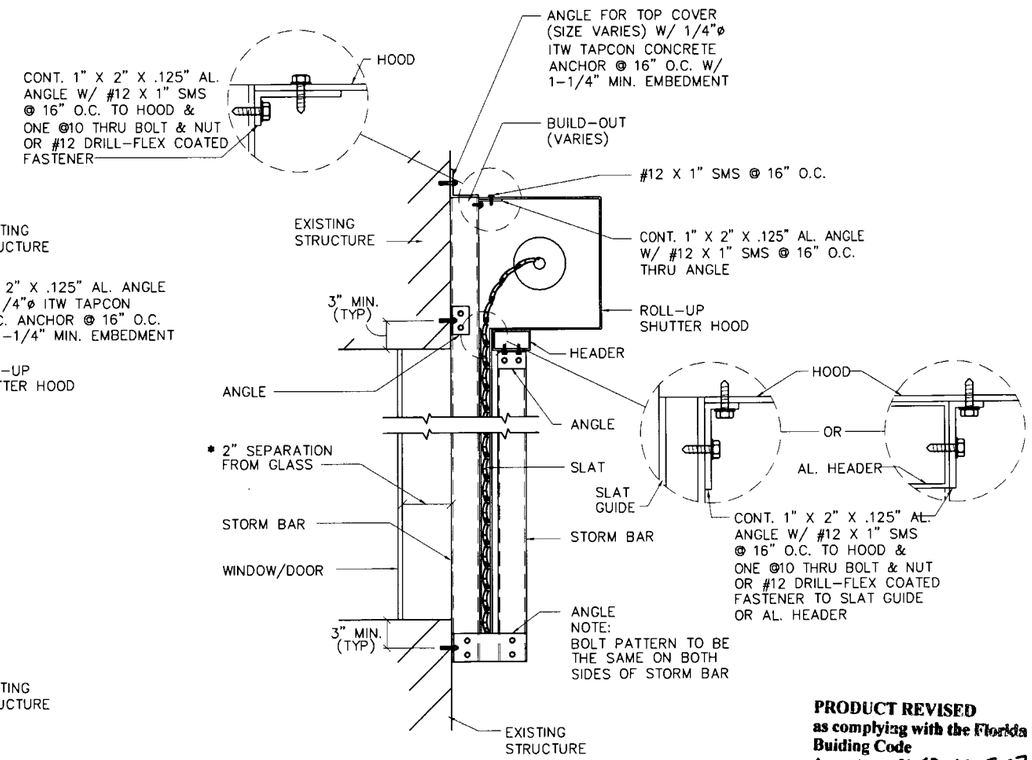

Ⓔ BUILD-OUT SECTION W/ STORM BAR
SCALE : 3/4" = 1'-0"

PRODUCT REVISED
as complying with the Florida Buiding Code
Acceptance No 02-0305.07
Expiration Date February 8, 2007
By
Miami Dade Product Control Division

KNEZEVICH & ASSOCIATES, INC.
CONSULTING ENGINEERS • PRODUCT TESTING
1260 N. UNIVERSITY DRIVE, SUITE 180 • FORT LAUDERDALE, FL 33322
TEL: (954) 382-2800 • FAX: (954) 382-2989 • FLORIDA COA #3205
WEBSITE: WWW.KNEZEVICH.COM • E-MAIL: KA@KNEZEVICH.COM

COPYRIGHT © 2002 KNEZEVICH & ASSOCIATES, INC

SUPER ROLL-UP SHUTTER

Manufacturers of Hurricane & Security Protection Products
HURST AWNING COMPANY, INC. "QUALITY SERVICE SINCE 1957"
6865 N.W. 36th Avenue
Miami, Florida 33147
Phone: (305) 635-0900
Toll Free: (800) 327-0905
Fax: (305) 634-9078

V.J. KNEZEVICH
PROFESSIONAL ENGINEER
FL License No: PE 0010983

MAY 14 2002

revisions

no	date	by	description
1	11/30/95		COUNTY COMMENTS
2	05/14/02	DLB	GENERAL NOTES

date 08/22/1996
scale AS NOTED
drawn by J.W. HILL
design by VJK
checked by VJK
drawing no. 95-187
sheet 3 of 10

Print Information: J:\CADD\Cadd95\HURST\95-187\R2-sub\95-187-03.dwg AVazquez 05/14/2002 02:18:02pm
05/14/02 14:17

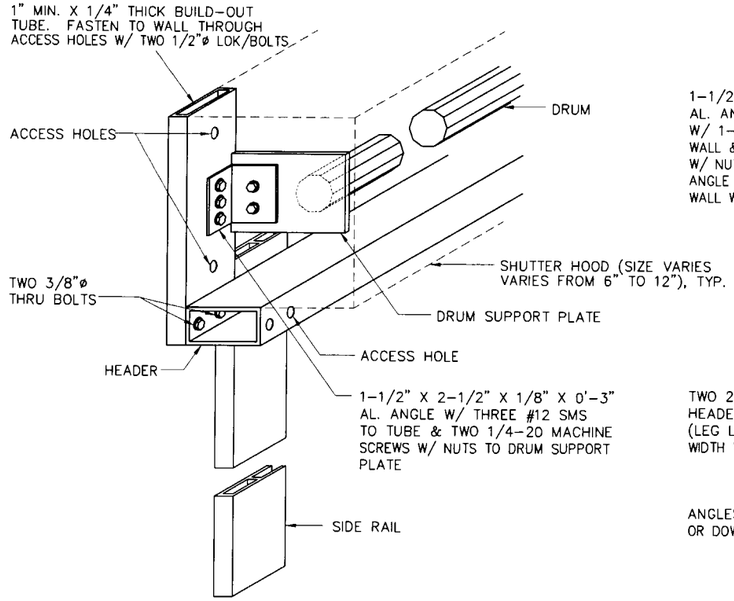

Ⓐ DRUM SUPPORT & HEADER TO BUILD-OUT DETAIL

SCALE : 1-1/2" = 1'-0"

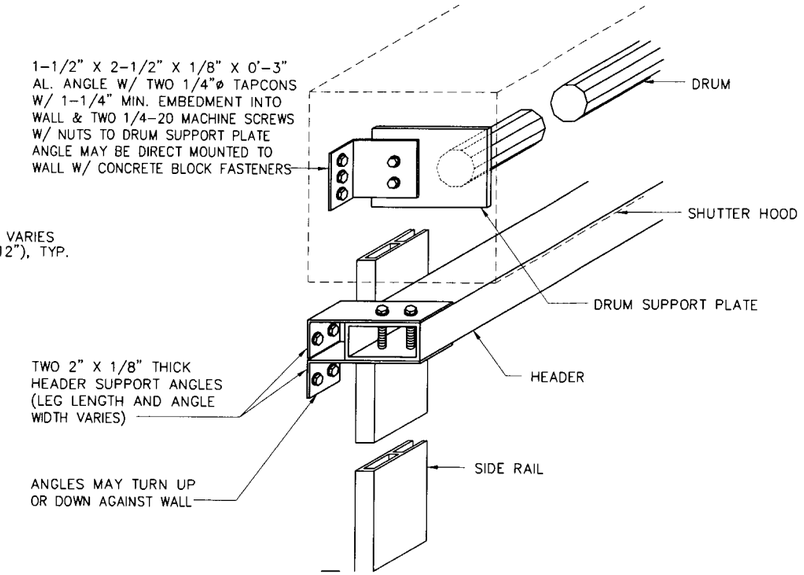

Ⓑ ALT. DRUM SUPPORT & HEADER TO WALL DETAIL

SCALE : 1-1/2" = 1'-0"

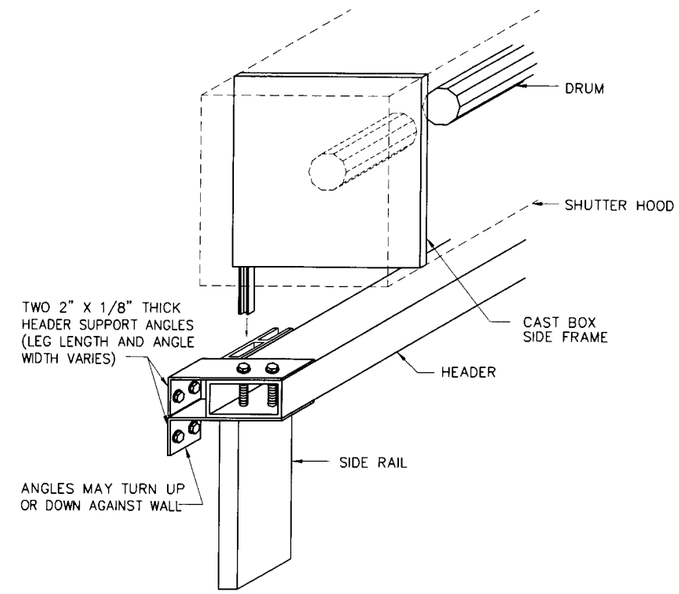

Ⓒ CAST DRUM SUPPORT & HEADER DETAIL

SCALE : 1-1/2" = 1'-0"

SLAT SPAN - SCHEDULE B

CONTRACTOR/INSTALLER TO UTILIZE SMALLEST OF POSITIVE LOAD SPAN AND NEGATIVE LOAD SPAN FOR EACH OPENING.

DESIGN LOAD (P.S.F.)	SPANS FOR POSITIVE LOADS	SPANS FOR NEGATIVE LOADS
	TOTAL SLAT SPAN (FT-IN)	TOTAL SLAT SPAN (FT-IN)
30.0	7 - 1	7 - 4
40.0	6 - 7	7 - 4
50.0	6 - 3	6 - 11
60.0	6 - 0	6 - 6
70.0	5 - 9	6 - 2
80.0	5 - 6	5 - 11
90.0	5 - 5	5 - 8
100.0	5 - 3	5 - 6
110.0	5 - 2	5 - 4
115.0	5 - 1	5 - 3
120.0	5 - 0	5 - 2
130.0	4 - 11	5 - 0
140.0	4 - 10	4 - 11
150.0	4 - 9	4 - 9
160.0	4 - 8	4 - 8
170.0	4 - 7	4 - 7
180.0	4 - 6	4 - 6
190.0	4 - 5	4 - 5
200.0	4 - 5	4 - 4
210.0	4 - 4	4 - 3
220.0	4 - 4	4 - 2
230.0	4 - 3	4 - 2

MIN. SEPARATION FROM GLASS SCHEDULE B-B

POSITIVE DESIGN LOAD (P.S.F.)	ACTUAL SHUTTER SPAN (L) (FT - IN)	MINIMUM SEPARATION FOR INSTALLATIONS ≤ 30' ABOVE GRADE (INCHES)	MINIMUM SEPARATION FOR INSTALLATIONS > 30' ABOVE GRADE (INCHES)
40.0	3 - 0	2	1-1/4
	5 - 0	2	1-3/4
	6 - 7	3	3
50.0	3 - 0	2	1-1/4
	5 - 0	2	1-7/8
	6 - 3	3	3
60.0	3 - 0	2	1-1/4
	5 - 0	2	2-1/8
	6 - 0	3	3
70.0	3 - 0	2	1-3/8
	4 - 0	2	1-5/8
	5 - 9	3	3
80.0	3 - 0	2	1-3/8
	4 - 0	2	1-5/8
	5 - 6	3	3
90.0	3 - 0	2	1-3/8
	4 - 0	2	1-3/4
	5 - 5	3	3
100.0	3 - 0	2	1-3/8
	4 - 0	2	1-3/4
	5 - 3	3	3
110.0	3 - 0	2	1-3/8
	4 - 0	2	1-7/8
	5 - 1	3	3
115.0	3 - 0	2	1-3/8
	4 - 0	2	1-7/8
	5 - 0	3	3

NOTE: INTERPOLATE FOR SLAT SPANS AND DEFLECTION BETWEEN THOSE SHOWN.

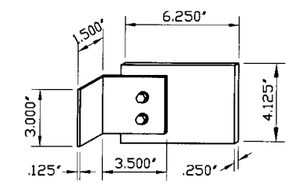

DRUM SUPPORT PLATE DETAIL

SCALE : 1-1/2" = 1'-0"

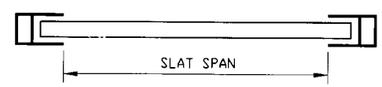

SINGLE SPAN

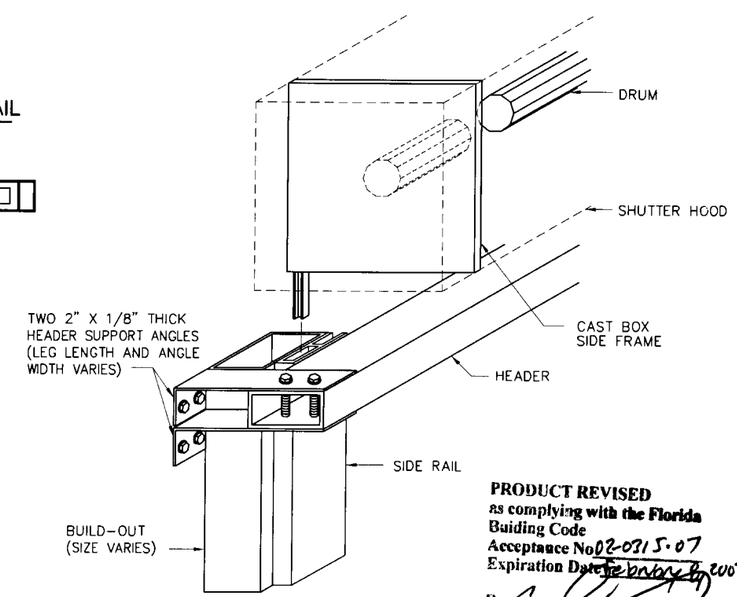

PRODUCT REVISED
as complying with the Florida Building Code
Acceptance No. 02-0315.07
Expiration Date February 6, 2007
By
Miami Dade Product Control Division

Ⓓ CAST DRUM SUPPORT & HEADER DETAIL W/ BUILD-OUT

SCALE : 1-1/2" = 1'-0"

KNEZEVICH & ASSOCIATES, INC.
CONSULTING ENGINEERS • PRODUCT TESTING
1260 N. UNIVERSITY DRIVE, SUITE 180 • FORT LAUDERDALE, FL 33322
TEL: (954) 382-2800 • FAX: (954) 382-2989 • FLORIDA COA #3205
WEBSITE: WWW.KNEZEVICH.COM • E-MAIL: KA@KNEZEVICH.COM

COPYRIGHT © 2002 KNEZEVICH & ASSOCIATES, INC

SUPER ROLL-UP SHUTTER

Manufacturers of Hurricane & Security Protection Products

HURST AWNING COMPANY, INC. "QUALITY SERVICE SINCE 1957"
6865 N.W. 36th Avenue
Miami, Florida 33147
Phone: (305) 635-0900
Toll Free: (800) 327-0905
Fax: (305) 634-9078

V.J. KNEZEVICH
PROFESSIONAL ENGINEER
Fl. License No. PE 0010983

MAY 14 2002

revisions			
no	date	by	description
1	11/30/95		COUNTY COMMENTS
2	05/14/02	OLB	GENERAL NOTES

date 08/22/1996	
scale AS NOTED	drawn by J.W. HILL
design by VJK	checked by VJK
drawing no. 95-187	
sheet 4 of 10	

Print Information: J:\CADD\Cadd95\HURST\95-187\R2-sub\95-187-04.dwg AVazquez 05/14/2002 02:18:15pm
05/14/02 14:18

Block B
Concrete C

ANCHOR AND FASTENER - SCHEDULE C

RAWL LOK/BOLT - **TENSION** IN CONCRETE OR BLOCK
RAWL CALK-IN - **TENSION** IN CONCRETE OR BLOCK

ANCHOR TYPE	MATERIAL TYPE	STORM BAR & MULLION REACTION (POUNDS)	WALL MOUNT				ANGLE DIMENSIONS		STORM BAR, MULLION OR HEADER TO ANGLES	
			DIAMETER (INCHES)	EMBEDMENT DISTANCE (INCHES)	QUANTITY OF FASTENERS PER ANGLE	CONCRETE OR BLOCK EDGE DISTANCE (INCHES)	THICKNESS OF TWO (2) ANGLES (INCHES)	MIN. (L) LENGTH OF EACH ANGLE (INCHES)	NO. OF TEK SCREWS EA. LEG EACH ANGLE	SIZE OF TEK SCREWS
LOK/BOLT	B	600	0.250	1.125	1	3.0	0.125	3.00	2	#12
CALK-IN	B	850	0.375	1.250	1	4.5	0.125	4.08	3	#12
LOK/BOLT	B	1200	0.250	1.125	2	3.0	0.125	5.76	3	#12
LOK/BOLT	B	1200	0.250	1.125	2	3.0	0.250	4.00	3	#12
CALK-IN	B	1700	0.375	1.250	2	4.5	0.250	5.25	3	#12
CALK-LOK	C	2508	0.500	1.5 - 2.25	1	6.0	0.250	3.01	4	#14
LOK/BOLT	C	2700	0.375	1.625	2	4.5	0.250	5.25	4	#14
CALK-IN	C	4810	0.375	1.250	2	4.5	0.250	11.50	6	#14
LOK/BOLT	C	5015	0.500	2.250	2	6.0	0.250	11.50	7	#14

Block B
Concrete C

ANCHOR AND FASTENER - SCHEDULE D

RAWL LOK/BOLT - **SHEAR** IN CONCRETE OR BLOCK
RAWL CALK-IN - **SHEAR** IN CONCRETE OR BLOCK

ANCHOR TYPE	MATERIAL TYPE	STORM BAR & MULLION REACTION (POUNDS)	WALL MOUNT				ANGLE DIMENSIONS		STORM BAR, MULLION OR HEADER TO ANGLES	
			DIAMETER (INCHES)	EMBEDMENT DISTANCE (INCHES)	QUANTITY OF FASTENERS PER ANGLE	CONCRETE OR BLOCK EDGE DISTANCE (INCHES)	THICKNESS OF TWO (2) ANGLES (INCHES)	MIN. (L) LENGTH OF EACH ANGLE (INCHES)	NO. OF TEK SCREWS EA. LEG EACH ANGLE	SIZE OF TEK SCREWS
LOK/BOLT	B	318	0.250	1.125	2	1.25	0.125	SEE DETAIL (B) SHEET 5 of 10 FOR L	2	#12
CALK-LOK	B	635	0.250	.875 - 1.125	1	3.00	0.125		2	#12
LOK/BOLT	B	635	0.250	1.125	4	1.25	0.125		3	#12
LOK/BOLT	B	1270	0.250	1.125	2	3.00	0.125		3	#12
LOK/BOLT	C	1625	0.375	1.625	1	4.50	0.125		3	#12
CALK-IN	C	1800	0.375	.875	2	3.00	0.125		3	#12
LOK/BOLT	C	3250	0.375	1.625	2	4.50	0.125		5	#14
CALK-IN	C	4220	0.375	1.250	2	4.50	0.125		6	#14
CALK-LOK	C	5800	0.500	1.5 - 2.25	2	6.00	0.125		8	#14
LOK/BOLT	C	5800	0.375	1.625	4	4.50	0.125		8	#14

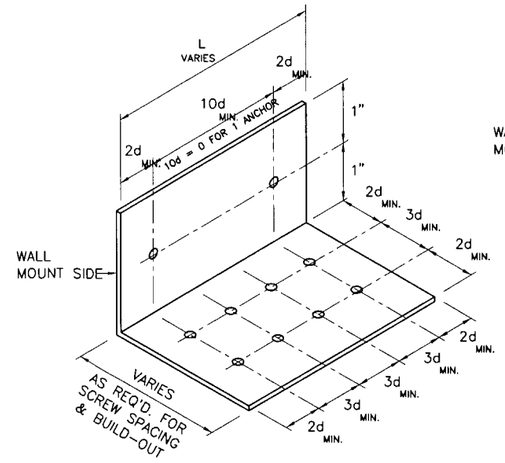

(A) TENSION CONNECTION TO WALL FOR STORM BAR, HEADER, OR MULLION

N. T. S.

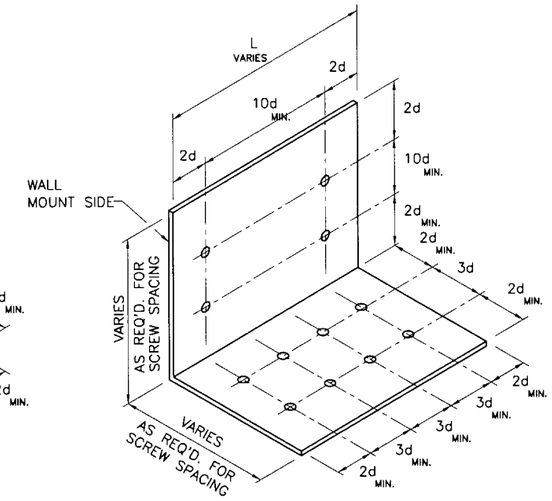

(B) SHEAR CONNECTION TO FLOOR OR CEILING FOR STORM BAR, HEADER, OR MULLION

N. T. S.

NOTE:
ANGLE ISOMETRIC DEPICTS MAXIMUM NUMBER OF ANCHOR BOLTS & TEK SCREWS, AND THEIR ARRANGEMENT. FOR LESS ANCHORS OR TEK SCREWS, ANY 3d OR 10d DIMENSIONS MAY BE = 0.

NUMBER OF STORM BARS	HEADER REACTION DETERMINATION SCHEDULE E HEADER REACTION EACH END (POUNDS)
1	.5 X ONE STORM BAR END REACTION
2	1 X ONE STORM BAR END REACTION
3 OR MORE	1.5 X ONE STORM BAR END REACTION

SEE SCHEDULE B & C ABOVE FOR ANGLE, ANCHOR AND FASTENER QUANTITY AND SIZE.

WOOD FASTENING NOTES:

GALVANIZED STEEL OR 410 STAINLESS STEEL W/ FLUOROCARBON COATING LAG SCREW FOR WOOD, MAY BE USED AT LOADS, QUANTITY & EMBEDMENT INDICATED FOR BLOCK OR CONCRETE. EMBEDMENT SHALL BE AT THE CENTER OF A PRIMARY FRAMING MATERIAL SUCH AS A 2 X WOOD STUD OR A 2 X WOOD HEADER OR SILL PLATE.

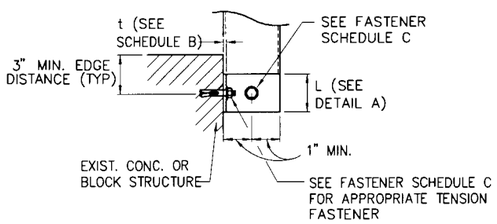

(C) STORM BAR/MULLION TO WALL SECTION

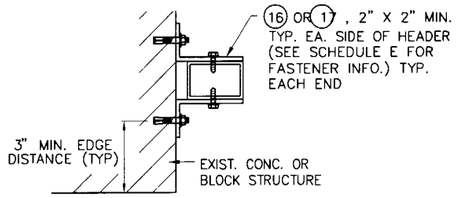

(D) HEADER TO WALL SECTION

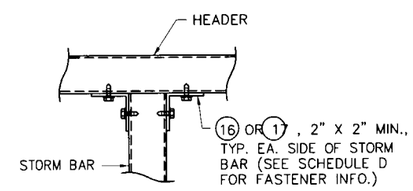

(E) HEADER TO STORM BAR DETAIL

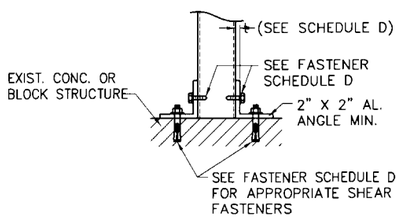

(F) STORM BAR/MULLION TO FLOOR/CEILING DETAIL

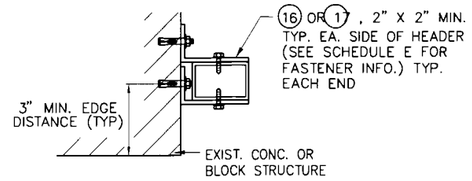

(G) HEADER TO WALL SECTION

STORM BAR/HEADER CONNECTION DETAILS

SCALE : 1-1/2" = 1'-0"

PRODUCT REVISED
as complying with the Florida Building Code
Acceptance No. 02-0205.07
Expiration Date February 8, 2007
By
Miami Dade Product Control Division

KNEZEVICH & ASSOCIATES, INC.
CONSULTING ENGINEERS • PRODUCT TESTING
1260 N. UNIVERSITY DRIVE, SUITE 180 • FORT LAUDERDALE, FL 33322
TEL: (954) 382-2800 • FAX: (954) 382-2989 • FLORIDA COA #3205
WEBSITE: WWW.KNEZEVICH.COM • E-MAIL: KA@KNEZEVICH.COM

COPYRIGHT © 2002 KNEZEVICH & ASSOCIATES, INC

SUPER ROLL-UP SHUTTER

HURST AWNING COMPANY, INC. "QUALITY SERVICE SINCE 1937"
Manufacturers of Hurricane & Security Protection Products
6865 N.W. 36th Avenue
Miami, Florida 33147
Phone: (305) 635-0900
Toll Free: (800) 327-0905
Fax: (305) 634-9078

V.J. KNEZEVICH
PROFESSIONAL ENGINEER
FL License No: PE 0010983

MAY 14 2002

revisions			
no	date	by	description
1	11/30/95		COUNTY COMMENTS
2	05/14/02	OLB	GENERAL NOTES

date 08/22/1996
scale AS NOTED
drawn by J.W. HILL
design by VJK
checked by VJK
drawing no. 95-187
sheet 5 of 10

Print Information: J:\CADD\Cadd95\HURST\95-187\R2-sub\95-187-05.dwg AVazquez 05/14/2002 02:18:30pm
05/14/02 14:18

EXTERIOR STORM BAR SPAN SCHEDULE (F) - MULTIPLE SPAN CONDITION (ALL SPANS)

NEGATIVE DESIGN LOAD (P.S.F.)	SLAT SPAN OR STORM BAR SPACING (IN)	STORM BARS - MAX. LENGTH (INCHES) STORM BAR TYPE (4) 1.5" x 3"	(4) END REACTION (POUNDS)	(6) 2" x 3"	(6) END REACTION (POUNDS)	(8) 2" x 4"	(8) END REACTION (POUNDS)	(11) 2" x 5"	(11) END REACTION (POUNDS)	(15) 2" x 9"	(15) END REACTION (POUNDS)
40	24	144	601	145	604	176	733	205	854	311	1296
	36	119	742	119	745	145	905	169	1055	259	1619
	48	103	862	103	861	126	1050	147	1225	227	1892
	60	93	968	92	963	113	1178	132	1375	205	2135
	72	85	1064	84	1055	103	1294	121	1511	188	2355
	88	77	1180	76	1166	94	1434	110	1676	172	2622
50	24	130	675	130	678	158	823	184	959	281	1465
	36	107	834	107	834	130	1015	152	1184	234	1827
	48	93	968	92	963	113	1178	132	1375	205	2135
	60	83	1087	83	1077	101	1321	119	1543	185	2407
	72	76	1194	75	1180	93	1451	109	1696	170	2654
	88	69	1324	68	1304	84	1604	98	1881	155	2954
60	24	119	742	119	745	145	905	169	1055	259	1619
	36	98	917	97	914	119	1115	139	1302	215	2017
	48	85	1064	84	1055	103	1294	121	1511	188	2355
	60	76	1194	75	1180	93	1451	109	1696	170	2654
	72	70	1312	69	1292	85	1589	99	1863	156	2925
	88	63	1455	62	1428	77	1757	90	2066	142	3255
70	24	110	804	111	806	134	980	157	1143	241	1760
	36	91	993	90	987	110	1208	129	1410	200	2192
	48	79	1152	78	1140	96	1400	112	1637	175	2558
	60	71	1293	70	1274	86	1567	101	1836	158	2882
	72	65	1420	64	1396	78	1717	92	2017	145	3176
	84	60	1538	59	1507	73	1854	86	2184	135	3446
	86	59	1559	58	1528	72	1879	84	2214	133	3496
80	24	103	862	103	861	126	1050	147	1225	227	1892
	36	85	1064	84	1055	103	1294	121	1511	188	2355
	48	74	1235	73	1218	90	1498	105	1753	165	2747
	60	66	1385	65	1362	80	1675	94	1967	149	3094
	72	61	1521	60	1492	73	1835	86	2161	136	3409
	78	59	1585	57	1553	71	1910	83	2251	131	3557
	83	57	1641	55	1606	68	1976	80	2331	127	3686
90	24	98	917	97	914	119	1115	139	1302	215	2017
	36	80	1131	80	1119	98	1374	114	1606	178	2508
	48	70	1312	69	1292	85	1589	99	1863	156	2925
	60	63	1472	62	1445	76	1777	89	2090	141	3294
	72	57	1617	56	1582	69	1947	82	2295	129	3629
	78	55	1684	54	1647	66	2026	78	2390	124	3786
	81	54	1717	53	1679	65	2065	72	2436	122	3862
100	24	93	968	92	963	113	1178	132	1375	205	2135
	36	76	1194	75	1180	93	1451	109	1696	170	2654
	48	66	1385	65	1362	80	1675	94	1967	149	3094
	60	60	1554	58	1523	72	1873	85	2206	134	3484
	66	57	1632	56	1597	69	1964	81	2317	128	3664
	72	55	1706	53	1668	66	2052	77	2421	123	3837
	79	52	1787	51	1746	63	2148	74	2534	118	4027
110	24	89	1017	88	1010	108	1237	126	1445	196	2247
	36	73	1254	72	1237	89	1522	104	1781	162	2793
	48	63	1455	62	1428	77	1757	90	2066	142	3255
	60	57	1632	56	1597	69	1964	81	2317	128	3664
	66	54	1714	53	1675	65	2060	77	2431	122	3853
	72	52	1790	51	1749	63	2152	74	2539	117	4035
	77	50	1852	49	1810	60	2247	71	2651	113	4182
120	24	85	1064	84	1055	103	1294	121	1511	188	2355
	36	70	1312	69	1292	85	1589	99	1863	156	2925
	48	61	1521	60	1492	73	1835	86	2161	136	3409
	60	55	1706	53	1668	66	2052	77	2421	123	3837
	66	52	1790	51	1749	63	2152	74	2539	117	4035
	72	50	1869	49	1827	60	2248	71	2652	113	4224
	75	49	1913	48	1870	59	2300	69	2714	110	4328
130	24	82	1109	81	1098	100	1348	116	1575	182	2458
	36	67	1367	66	1345	81	1654	96	1942	150	3053
	48	59	1585	57	1553	71	1910	83	2251	131	3557
	60	52	1776	51	1736	63	2136	74	2520	118	4002
	66	50	1863	49	1821	60	2240	71	2643	113	4209
	72	48	1946	47	1902	58	2339	68	2760	108	4406
	74	47	1971	46	1927	57	2370	67	2796	107	4467
140	24	79	1152	78	1140	96	1400	112	1637	175	2558
	36	65	1420	64	1396	78	1717	92	2017	145	3176
	48	56	1647	55	1612	68	1982	80	2339	127	3699
	60	53	1749	49	1802	61	2216	72	2615	114	4162
	66	51	1843	47	1890	58	2324	68	2742	109	4376
	72	48	1933	45	1974	55	2428	65	2864	105	4582
	73	46	2027	45	1981	55	2437	65	2875	104	4600

NOTE: INTERPOLATE FOR STORM BAR SPANS AND REACTIONS BETWEEN THOSE SHOWN ON THIS SHEET.

EXTERIOR STORM BAR SPAN SCHEDULE (F) - MULTIPLE SPAN CONDITION (ALL SPANS)

NEGATIVE DESIGN LOAD (P.S.F.)	SLAT SPAN OR STORM BAR SPACING (IN)	STORM BARS - MAX. LENGTH (INCHES) STORM BAR TYPE (4) 1.5" x 3"	(4) END REACTION (POUNDS)	(6) 2" x 3"	(6) END REACTION (POUNDS)	(8) 2" x 4"	(8) END REACTION (POUNDS)	(11) 2" x 5"	(11) END REACTION (POUNDS)	(15) 2" x 9"	(15) END REACTION (POUNDS)
150	24	76	1194	75	1180	93	1451	109	1696	170	2654
	36	63	1472	62	1445	76	1777	89	2090	141	3294
	48	55	1706	53	1668	66	2052	77	2421	123	3837
	54	51	1810	50	1769	62	2176	73	2568	116	4083
	60	49	1908	48	1865	59	2294	69	2706	110	4316
	66	47	2001	46	1956	56	2406	66	2839	106	4538
	71	45	2080	44	2033	54	2501	64	2951	102	4727
160	24	74	1235	73	1218	90	1498	105	1753	165	2747
	36	61	1521	60	1492	73	1835	86	2161	136	3409
	48	53	1763	49	1723	64	2119	75	2500	119	3970
	54	50	1869	52	1827	60	2248	71	2652	113	4224
	60	47	1971	46	1926	57	2369	67	2795	107	4465
	66	45	2067	44	2020	54	2485	64	2932	102	4695
	70	44	2131	43	2083	53	2562	62	3023	100	4849
170	24	72	1274	71	1256	87	1545	102	1809	160	2838
	36	59	1570	58	1538	71	1892	84	2229	133	3520
	48	51	1817	50	1776	62	2184	73	2577	116	4099
	54	48	1927	47	1884	58	2317	69	2733	109	4361
	60	46	2031	45	1985	55	2442	65	2881	104	4610
	66	44	2130	43	2082	53	2561	62	3022	100	4847
	69	43	2180	42	2131	51	2621	61	3092	97	4966
180	24	70	1312	69	1292	85	1589	99	1863	156	2925
	36	57	1617	56	1582	69	1947	82	2295	129	3629
	48	50	1869	49	1827	60	2248	71	2652	113	4224
	54	47	1983	46	1938	57	2384	67	2813	107	4495
	60	45	2090	44	2043	54	2513	63	2965	101	4751
	66	43	2192	42	2143	51	2636	60	3110	97	4995
	68	42	2227	41	2177	50	2678	59	3159	95	5079
190	24	68	1349	67	1327	83	1633	97	1916	152	3011
	36	56	1662	55	1626	67	2000	79	2359	126	3734
	48	52	1797	47	1877	58	2309	69	2724	110	4346
	54	46	2037	45	1991	55	2449	65	2890	104	4624
	60	43	2147	42	2099	52	2582	62	3046	99	4888
	66	41	2252	40	2201	50	2708	59	3195	94	5139
	67	41	2273	40	2222	49	2733	58	3224	94	5188
200	24	66	1385	65	1362	80	1675	94	1967	149	3094
	36	60	1554	53	1668	66	2052	77	2421	123	3837
	42	55	1706	49	1802	61	2216	72	2615	114	4162
	48	51	1843	46	1926	57	2369	67	2795	107	4465
	54	47	1971	44	2043	54	2513	63	2965	101	4751
	60	45	2090	41	2153	51	2649	60	3125	96	5021
	66	40	2317	39	2264	48	2785	57	3286	92	5293
210	24	65	1420	64	1396	78	1717	92	2017	145	3176
	36	58	1593	52	1709	64	2102	76	2481	120	3937
	42	53	1749	48	1846	59	2271	70	2679	112	4270
	48	49	1889	45	1974	55	2428	65	2864	105	4582
	54	46	2019	43	2093	52	2575	62	3038	99	4874
	60	44	2142	40	2207	50	2714	59	3202	94	5151
	65	40	2345	39	2292	48	2819	56	3326	91	5361
220	24	63	1455	62	1428	77	1757	90	2066	142	3255
	36	57	1632	51	1749	63	2152	74	2539	117	4035
	42	52	1790	47	1890	58	2324	68	2742	109	4376
	48	48	1933	44	2020	54	2485	64	2932	102	4695
	54	45	2067	42	2143	51	2636	60	3110	97	4995
	60	43	2192	39	2259	48	2778	57	3278	92	5279
	63	39	2372	38	2319	47	2852	56	3365	90	5427
230	24	62	1489	61	1461	75	1797	88	2114	139	3333
	30	56	1670	55	1633	67	2009	79	2370	125	3751
	36	51	1830	50	1789	61	2200	72	2596	115	4130
	42	47	1977	46	1932	57	2377	67	2804	107	4480
	48	44	2113	43	2066	53	2541	63	2998	100	4806
	54	42	2241	41	2191	50	2695	59	3179	95	5113
	62	39	2399	38	2345	47	2884	55	3403	89	5490

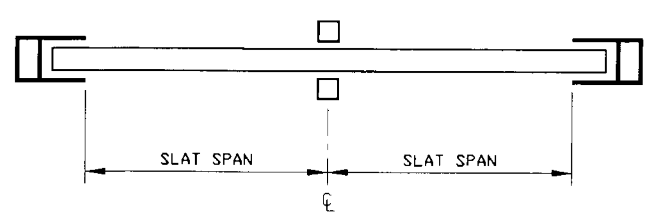

DOUBLE SPAN LAYOUT

PRODUCT REVISED
as complying with the Florida Building Code
Acceptance No 02-0315.07
Expiration Date February 8, 2007
By
Miami Dade Product Control Division

KNEZEVICH & ASSOCIATES, INC.
CONSULTING ENGINEERS • PRODUCT TESTING
1260 N. UNIVERSITY DRIVE, SUITE 180 • FORT LAUDERDALE, FL 33322
TEL: (954) 382-2800 • FAX: (954) 382-2989 • FLORIDA COA #3205
WEBSITE: WWW.KNEZEVICH.COM • E-MAIL: KA@KNEZEVICH.COM

COPYRIGHT © 2002 KNEZEVICH & ASSOCIATES, INC

SUPER ROLL-UP SHUTTER
Manufacturers of Hurricane & Security Protection Products
6865 N.W. 36th Avenue
Miami, Florida 33147
Phone: (305) 635-0900
Toll Free: (800) 327-0905
Fax: (305) 634-9078
HURST AWNING COMPANY, INC. "QUALITY SERVICE SINCE 1957"

V.J. KNEZEVICH
PROFESSIONAL ENGINEER
FL License No: PE 0010983
MAY 14 2002

revisions			
no	date	by	description
1	11/30/95		COUNTY COMMENTS
2	05/14/02	OLB	GENERAL NOTES

date 08/22/1996	
scale AS NOTED	drawn by J.W. HILL
design by VJK	checked by VJK
drawing no 95-187	
sheet 6 of 10	

Print Information: J:\CADD\Cadd95\HURST\95-187\R2-sub\95-187-06.dwg AVazquez 05/14/2002 02:18:45pm

INTERIOR STORM BAR SPAN SCHEDULE Ⓖ - MULTIPLE SPAN CONDITION (ALL SPANS)

STORM BARS - MAX. LENGTH (INCHES) — SEPARATION FROM GLASS = 1"

POSITIVE DESIGN LOAD (P.S.F.)	SLAT SPAN OR STORM BAR SPACING (IN)	STORM BAR TYPE: ④ 1.5" x 3"	④ END REACTION (POUNDS)	⑤ 2" x 3"	⑤ END REACTION (POUNDS)	⑦ 2" x 4"	⑦ END REACTION (POUNDS)	⑩ 2" x 5"	⑩ END REACTION (POUNDS)	⑭ 2" x 9"	⑭ END REACTION (POUNDS)
40	24	113	469	108	449	129	536	148	617	213	889
	36	102	636	97	609	116	727	134	836	193	1205
	48	95	789	91	756	108	902	124	1037	179	1495
	60	90	933	86	893	102	1066	118	1226	160	1672
	72	85	1064	79	989	98	1220	112	1406	147	1831
	88	77	1180	72	1093	88	1349	104	1585	133	2025
50	24	107	555	102	531	122	634	140	729	202	1051
	36	96	752	92	720	110	859	126	988	182	1424
	48	90	933	86	893	102	1066	118	1226	160	1672
	60	83	1087	78	1009	96	1245	111	1449	144	1869
	72	76	1194	71	1106	87	1364	103	1604	131	2047
	88	69	1324	64	1222	79	1508	93	1778	119	2264
60	24	102	636	97	609	116	727	134	836	193	1205
	36	92	862	88	825	105	985	121	1133	169	1586
	48	85	1064	79	989	98	1220	112	1406	147	1831
	60	76	1194	71	1106	87	1364	103	1604	131	2047
	72	70	1312	65	1211	80	1494	94	1762	120	2243
	88	63	1455	58	1339	72	1652	85	1953	108	2480
70	24	98	714	94	684	112	816	129	938	185	1352
	36	89	968	85	925	101	1106	116	1272	157	1713
	48	79	1152	73	1068	90	1318	106	1548	136	1978
	60	71	1293	66	1194	81	1473	95	1736	121	2211
	72	65	1420	60	1308	74	1614	87	1907	111	2423
	84	60	1538	55	1413	68	1743	81	2062	103	2617
	86	59	1559	55	1432	67	1767	80	2089	101	2652
80	24	95	789	91	756	108	902	124	1037	179	1495
	36	85	1064	79	989	98	1220	112	1406	147	1831
	48	74	1235	69	1142	85	1409	99	1658	127	2115
	60	66	1385	61	1277	76	1575	89	1860	113	2364
	72	61	1521	56	1399	69	1725	82	2040	104	2590
	78	59	1585	54	1456	66	1796	78	2124	100	2696
	83	57	1641	52	1506	64	1857	76	2197	96	2788
90	24	92	862	88	825	105	985	121	1133	169	1586
	36	80	1131	75	1049	92	1294	108	1519	138	1942
	48	70	1312	65	1211	80	1494	94	1762	120	2243
	60	63	1472	58	1354	71	1670	84	1976	107	2508
	72	57	1617	53	1483	65	1830	77	2164	98	2747
	78	55	1684	51	1544	63	1905	74	2253	94	2859
	81	54	1717	50	1574	61	1941	73	2296	92	2914
100	24	90	933	86	893	102	1066	118	1226	160	1672
	36	76	1194	71	1106	87	1364	103	1604	131	2047
	48	66	1385	61	1277	76	1575	89	1860	113	2364
	60	60	1554	55	1427	68	1761	80	2082	102	2643
	66	57	1632	52	1497	64	1847	76	2184	97	2772
	72	55	1706	50	1564	62	1929	73	2281	93	2896
	79	52	1787	48	1637	59	2019	70	2388	89	3031
110	24	87	1002	83	947	100	1145	115	1317	153	1753
	36	73	1254	67	1160	83	1430	98	1685	125	2147
	48	63	1455	58	1339	72	1652	85	1953	108	2480
	60	57	1632	52	1497	64	1847	76	2184	97	2772
	66	54	1714	50	1570	61	1937	73	2291	92	2908
	72	52	1790	48	1640	59	2023	70	2393	88	3037
	77	50	1852	46	1697	57	2093	67	2475	85	3142

NOTE: INTERPOLATE FOR STORM BAR SPANS AND REACTIONS BETWEEN THOSE SHOWN ON THIS SHEET.

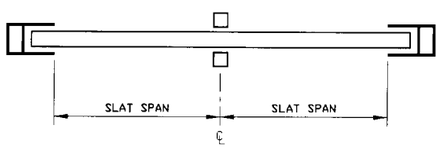

DOUBLE SPAN LAYOUT

INTERIOR STORM BAR SPAN SCHEDULE Ⓖ - MULTIPLE SPAN CONDITION (ALL SPANS)

STORM BARS - MAX. LENGTH (INCHES) — SEPARATION FROM GLASS = 1/2"

POSITIVE DESIGN LOAD (P.S.F.)	SLAT SPAN OR STORM BAR SPACING (IN)	STORM BAR TYPE: ④ 1" x 2"	④ END REACTION (POUNDS)	④ 1.5" x 3"	④ END REACTION (POUNDS)	㉒ 2" x 2"	㉒ END REACTION (POUNDS)	⑤ 2" x 3"	⑤ END REACTION (POUNDS)	⑦ 2" x 4"	⑦ END REACTION (POUNDS)	⑩ 2" x 5"	⑩ END REACTION (POUNDS)	⑭ 2" x 9"	⑭ END REACTION (POUNDS)
40	24	67	279	95	395	71	296	91	378	108	451	124	519	179	747
	36	61	378	86	535	64	401	82	512	98	611	112	703	162	1013
	48	56	470	80	664	60	498	76	635	91	758	105	872	151	1257
	60	53	555	75	785	56	588	72	751	86	896	99	1031	143	1486
	72	51	637	72	900	54	674	69	861	82	1028	95	1182	136	1704
	88	47	723	68	1046	51	784	66	1001	78	1195	90	1374	130	1980
	99	45	770	66	1144	50	858	64	1095	76	1307	87	1503	125	2150
50	24	63	330	90	467	67	350	86	447	102	533	118	613	170	883
	36	57	447	81	632	61	474	72	605	92	722	106	831	153	1197
	48	53	555	75	785	56	588	77	751	86	896	99	1031	143	1486
	60	50	656	71	928	53	695	68	888	81	1060	94	1219	135	1756
	72	47	732	68	1064	51	797	65	1018	78	1215	89	1397	129	2014
	88	42	811	65	1236	48	918	62	1184	74	1412	85	1624	119	2264
	94	41	839	64	1297	47	948	61	1242	73	1482	84	1704	115	2338
60	24	61	378	86	535	64	401	82	512	98	611	112	703	162	1013
	36	55	513	77	725	58	544	74	694	88	828	102	953	146	1373
	48	51	637	72	900	54	674	69	861	82	1028	95	1182	136	1704
	60	47	732	68	1064	51	797	65	1018	78	1215	89	1397	129	2014
	72	43	804	65	1219	49	910	62	1167	74	1393	85	1602	120	2243
	88	39	891	62	1418	44	1006	58	1339	71	1619	81	1862	108	2480
	90	39	900	62	1438	43	1015	58	1352	70	1642	81	1899	107	2503
70	24	58	425	82	601	62	450	79	575	94	686	108	789	156	1137
	36	53	576	74	814	56	610	71	779	85	930	98	1069	141	1541
	48	48	706	69	1010	52	757	66	967	79	1154	91	1327	131	1912
	60	43	792	65	1194	49	895	63	1143	75	1364	86	1569	121	2211
	72	40	870	63	1369	45	983	60	1308	71	1564	82	1798	111	2423
	84	37	942	60	1537	42	1061	55	1413	68	1743	79	2019	103	2617
	86	36	956	59	1559	41	1076	55	1432	67	1767	79	2060	101	2652
80	24	56	470	80	664	60	498	76	635	91	758	105	872	151	1257
	36	51	637	72	900	54	674	69	861	82	1028	95	1182	136	1704
	48	45	756	67	1116	50	837	64	1069	77	1275	88	1467	127	2114
	60	41	849	63	1320	46	959	61	1263	72	1508	83	1734	113	2364
	72	37	932	61	1513	42	1050	56	1399	69	1725	80	1988	104	2590
	78	36	971	59	1585	40	1093	54	1456	66	1796	78	2111	100	2696
	83	35	1006	57	1641	39	1131	52	1506	64	1857	76	2197	96	2788
90	24	55	513	77	725	58	544	74	694	88	828	102	953	146	1373
	36	49	693	70	983	52	737	67	941	80	1123	92	1291	132	1861
	48	43	804	65	1219	49	910	62	1167	74	1393	85	1602	120	2243
	60	38	902	62	1442	43	1017	58	1354	70	1647	81	1894	107	2508
	72	35	991	57	1617	40	1114	53	1483	65	1830	77	2164	98	2747
	78	34	1032	55	1684	38	1160	51	1544	63	1905	74	2253	94	2859
	81	33	1053	54	1717	37	1182	50	1574	61	1941	73	2296	92	2914
100	24	53	555	75	785	56	588	72	751	86	896	99	1031	143	1486
	36	47	732	68	1064	51	797	65	1018	78	1215	89	1397	129	2014
	48	41	849	63	1320	46	959	61	1263	72	1508	83	1734	113	2364
	60	37	952	60	1554	41	1072	55	1427	68	1761	79	2050	102	2643
	66	35	1000	57	1632	39	1124	52	1497	64	1847	76	2184	97	2772
	72	33	1046	55	1706	38	1174	50	1564	62	1929	73	2281	93	2896
	79	32	1095	52	1787	36	1230	48	1637	59	2019	70	2388	89	3031
110	24	52	596	74	843	55	632	70	807	84	963	97	1107	139	1596
	36	45	769	66	1142	50	856	64	1094	76	1305	87	1501	125	2147
	48	39	891	62	1418	44	1006	58	1339	71	1619	81	1862	108	2480
	60	35	1000	57	1632	39	1124	52	1497	64	1847	76	2184	97	2772
	66	33	1050	54	1714	37	1179	50	1570	61	1937	73	2291	92	2908
	72	32	1097	52	1790	36	1232	48	1640	59	2023	70	2393	88	3037
	77	31	1135	50	1852	35	1274	46	1697	57	2093	67	2475	85	3142

PRODUCT REVISED
as complying with the Florida Buiding Code
Acceptance No. 02-0315.07
Expiration Date February 8, 2007
By
Miami Dade Product Control Division

KNEZEVICH & ASSOCIATES, INC.
CONSULTING ENGINEERS • PRODUCT TESTING
1260 N. UNIVERSITY DRIVE, SUITE 180 • FORT LAUDERDALE, FL 33322
TEL: (954) 382-2800 • FAX: (954) 382-2989 • FLORIDA COA #3205
WEBSITE: WWW.KNEZEVICH.COM • E-MAIL: KA@KNEZEVICH.COM

COPYRIGHT © 2002 KNEZEVICH & ASSOCIATES, INC.

SUPER ROLL-UP SHUTTER
Manufacturers of Hurricane & Security Protection Products
HURST AWNING COMPANY, INC. QUALITY SERVICE SINCE 1957
6865 N.W. 36th Avenue
Miami, Florida 33147
Phone: (305) 635-0900
Toll Free: (800) 327-0905
Fax: (305) 634-9078

V.J. KNEZEVICH
PROFESSIONAL ENGINEER
FL License No: PE 0010983
MAY 14 2002

revisions			
no	date	by	description
1	11/30/95		COUNTY COMMENTS
2	05/14/02	DLB	GENERAL NOTES

date 08/22/1996
scale AS NOTED
drawn by J.W. HILL
design by VJK
checked by VJK
drawing no. 95-187
sheet 7 of 10

PERMANENT MULLION SPAN SCHEDULE (H)

NEGATIVE DESIGN LOAD (P.S.F.)	SLAT SPAN (IN)	MULLION - MAX. LENGTH (INCHES)											
		MULLION TYPE											
		(4) 1.5" x 3"	(4) END REACTION (POUNDS)	(5) 2" x 3"	(5) END REACTION (POUNDS)	(7) 2" x 4"	(7) END REACTION (POUNDS)	(9) 2" x 4" (HEAVY)	(9) END REACTION (POUNDS)	(10) 2" x 5"	(10) END REACTION (POUNDS)	(14) 2" x 9"	(14) END REACTION (POUNDS)
40	44	80	581	76	548	96	693	116	841	115	835	188	1360
	50	77	624	73	589	92	746	112	904	111	898	181	1462
	56	75	667	71	629	89	796	108	965	108	959	174	1546
	62	73	707	68	667	87	845	105	1025	104	1018	166	1617
	68	71	747	67	705	84	892	102	1082	102	1075	159	1685
	74	69	786	65	741	82	939	100	1138	99	1131	153	1750
	88	65	873	62	825	78	1045	95	1267	94	1259	141	1896
50	39	77	636	72	600	91	759	111	921	110	915	179	1490
	45	74	688	69	649	88	822	107	996	106	990	169	1584
	51	71	738	67	696	85	882	103	1069	102	1062	161	1670
	57	69	787	65	742	82	940	100	1139	99	1132	153	1751
	63	67	834	63	787	80	996	97	1208	96	1200	147	1829
	69	65	880	61	830	78	1051	94	1274	94	1266	141	1904
	83	62	980	58	924	74	1170	89	1419	89	1410	130	2064
60	36	74	684	70	645	88	817	107	991	106	984	170	1577
	42	71	744	67	702	85	889	102	1078	102	1071	160	1680
	48	68	802	64	757	81	958	99	1162	98	1154	151	1777
	54	66	858	62	809	79	1025	95	1243	95	1235	144	1869
	60	64	912	60	861	76	1089	93	1321	92	1312	137	1957
	66	62	965	59	910	74	1152	90	1397	89	1388	131	2040
	78	59	1066	56	1005	71	1273	86	1453	85	1533	122	2199
70	33	72	727	68	686	86	868	104	1053	103	1046	163	1650
	39	68	795	65	750	82	949	99	1151	99	1144	152	1765
	45	66	860	62	812	79	1027	95	1246	95	1238	143	1872
	51	64	923	60	871	76	1102	92	1337	91	1328	136	1974
	57	62	984	58	928	74	1175	89	1425	89	1416	130	2071
	63	60	1043	56	984	71	1245	87	1510	86	1500	124	2163
	74	52	1144	54	1080	68	1367	83	1657	82	1647	116	2319
80	31	70	766	66	722	83	914	101	1109	100	1101	156	1716
	37	67	841	63	794	79	1005	96	1218	96	1210	146	1841
	43	64	914	60	862	76	1091	93	1323	92	1315	137	1959
	49	62	983	58	928	74	1174	89	1424	89	1415	130	2070
	55	60	1051	56	991	71	1255	86	1521	86	1512	123	2175
	61	58	1116	55	1053	69	1332	84	1616	83	1605	118	2276
	71	55	1220	52	1151	66	1458	80	1767	80	1756	110	2436
90	29	68	801	64	755	81	956	99	1160	98	1152	151	1774
	35	65	884	61	834	78	1056	94	1280	93	1272	140	1911
	41	62	963	59	909	74	1150	90	1395	90	1386	132	2038
	47	60	1040	56	981	72	1241	87	1505	86	1496	124	2158
	53	58	1113	55	1050	69	1329	84	1612	83	1601	118	2272
	59	56	1184	53	1117	67	1414	81	1715	81	1704	113	2380
	68	54	1287	51	1214	64	1537	78	1863	77	1851	106	2533
100	27	67	833	63	786	80	995	97	1206	96	1198	147	1828
	33	64	923	60	871	76	1103	92	1337	91	1329	136	1975
	39	61	1010	57	953	73	1206	88	1462	87	1453	127	2111
	45	58	1092	55	1031	70	1305	85	1582	84	1572	120	2240
	51	56	1172	53	1106	67	1400	82	1697	81	1686	114	2361
	57	55	1249	52	1178	65	1492	79	1809	79	1797	108	2477
	66	53	1324	50	1249	63	1581	77	1917	76	1905	104	2587
110	38	59	1053	56	994	71	1258	86	1526	86	1516	123	2180
	42	58	1113	55	1050	69	1329	84	1612	83	1602	118	2272
	46	56	1171	53	1105	67	1399	82	1696	81	1685	114	2360
	50	55	1228	52	1159	66	1467	80	1779	79	1767	110	2446
	54	54	1284	51	1211	64	1533	78	1859	78	1847	106	2528
	58	53	1338	50	1262	63	1598	76	1938	76	1925	103	2608
	62	52	1391	49	1312	62	1661	75	2015	74	2002	100	2685
120	37	58	1095	55	1033	70	1308	85	1586	84	1575	120	2244
	41	57	1159	54	1093	68	1384	82	1678	82	1667	115	2341
	45	55	1221	52	1152	66	1458	80	1768	79	1757	110	2435
	49	54	1282	51	1209	64	1531	78	1856	78	1844	106	2525
	53	53	1341	50	1265	63	1601	76	1942	76	1929	103	2612
	57	52	1399	49	1320	62	1671	75	2026	74	2013	100	2696
	61	51	1456	48	1373	60	1738	73	2108	73	2094	97	2778
130	35	57	1134	54	1070	68	1355	83	1643	82	1632	116	2304
	39	56	1202	53	1134	66	1436	81	1741	80	1730	111	2407
	43	54	1268	51	1197	65	1515	79	1837	78	1825	107	2505
	47	53	1333	50	1257	63	1592	77	1930	76	1918	103	2600
	51	52	1396	49	1317	62	1667	75	2021	74	2008	100	2692
	55	51	1457	48	1375	60	1740	73	2111	73	2097	96	2780
	59	50	1518	47	1432	59	1812	72	2198	71	2183	94	2866
140	34	56	1172	53	1106	67	1400	82	1697	81	1686	114	2361
	38	55	1244	52	1174	65	1486	79	1801	79	1790	109	2469
	42	53	1314	50	1240	64	1569	77	1903	77	1890	104	2573
	46	52	1382	49	1304	62	1651	75	2002	75	1989	100	2672
	50	51	1449	48	1367	61	1730	73	2098	73	2084	97	2768
	54	50	1514	47	1428	59	1808	72	2192	71	2178	94	2861
	58	49	1577	46	1488	58	1884	70	2284	70	2269	91	2950

NOTE: INTERPOLATE FOR MULLION SPANS AND REACTIONS BETWEEN THOSE SHOWN ON THIS SHEET.

PRODUCT REVISED
as complying with the Florida Building Code
Acceptance No 02-0315.07
Expiration Date February 8, 2007
By
Miami Dade Product Control Division

PERMANENT MULLION SPAN SCHEDULE (H)

NEGATIVE DESIGN LOAD (P.S.F.)	SLAT SPAN (IN)	MULLION - MAX. LENGTH (INCHES)											
		MULLION TYPE											
		(4) 1.5" x 3"	(4) END REACTION (POUNDS)	(5) 2" x 3"	(5) END REACTION (POUNDS)	(7) 2" x 4"	(7) END REACTION (POUNDS)	(9) 2" x 4" (HEAVY)	(9) END REACTION (POUNDS)	(10) 2" x 5"	(10) END REACTION (POUNDS)	(14) 2" x 9"	(14) END REACTION (POUNDS)
150	33	56	1208	52	1140	66	1443	80	1749	80	1738	111	2415
	37	54	1284	51	1211	64	1533	78	1859	78	1847	106	2528
	41	52	1358	49	1281	63	1621	76	1966	75	1953	102	2637
	45	51	1430	48	1349	61	1707	74	2070	73	2057	98	2741
	49	50	1500	47	1415	60	1791	72	2172	72	2158	94	2841
	53	49	1568	46	1479	58	1873	71	2271	70	2256	91	2937
	57	48	1635	45	1543	57	1953	69	2368	69	2353	89	3031
160	32	55	1243	52	1172	65	1484	79	1799	79	1788	109	2467
	36	53	1322	50	1248	63	1579	77	1915	76	1903	104	2585
	40	52	1400	49	1321	62	1672	75	2027	74	2014	99	2698
	44	50	1475	47	1392	60	1762	73	2137	72	2123	96	2806
	48	49	1549	46	1461	59	1850	71	2243	71	2229	92	2911
	52	48	1621	45	1529	57	1936	69	2347	69	2332	89	3011
	56	47	1691	44	1595	56	2020	68	2449	68	2433	86	3109
170	31	54	1276	51	1204	65	1524	78	1848	78	1836	107	2516
	35	52	1360	49	1283	63	1624	76	1969	75	1956	102	2639
	39	51	1441	48	1359	61	1721	74	2087	73	2073	97	2757
	43	50	1520	47	1434	59	1815	72	2201	71	2187	94	2869
	47	48	1597	46	1506	58	1907	70	2312	70	2297	90	2978
	51	47	1672	45	1577	56	1997	68	2421	68	2406	87	3082
	55	46	1745	44	1647	55	2085	67	2528	66	2508	84	3183
180	31	53	1304	50	1230	64	1557	77	1888	77	1875	105	2557
	35	52	1391	49	1312	62	1661	75	2015	74	2002	100	2685
	39	50	1476	47	1393	60	1763	73	2138	72	2124	96	2807
	43	49	1559	46	1471	58	1862	71	2257	70	2243	92	2924
	47	48	1639	45	1546	57	1958	69	2374	69	2359	88	3037
	51	47	1718	44	1621	56	2052	67	2488	67	2472	85	3145
	55	46	1795	43	1693	54	2143	66	2599	65	2561	83	3250
190	30	53	1329	50	1254	63	1587	77	1924	76	1912	103	2594
	34	51	1420	48	1340	61	1696	74	2057	74	2044	98	2727
	38	50	1509	47	1424	59	1802	72	2186	72	2171	94	2854
	42	48	1595	46	1505	58	1905	70	2310	70	2295	90	2976
	46	47	1679	44	1584	56	2006	68	2432	68	2416	87	3092
	50	46	1761	43	1662	55	2103	67	2551	66	2525	84	3205
	54	45	1841	42	1737	54	2199	65	2667	64	2611	81	3313
200	29	52	1353	50	1276	63	1616	76	1960	76	1947	102	2630
	33	51	1449	48	1367	61	1730	73	2098	73	2084	97	2768
	37	49	1541	46	1454	59	1840	71	2232	71	2217	93	2899
	41	48	1631	45	1539	57	1948	69	2362	69	2346	89	3025
	45	47	1718	44	1621	56	2052	67	2488	67	2472	85	3146
	49	45	1803	43	1701	54	2154	66	2612	65	2570	82	3262
	53	44	1887	42	1780	53	2248	64	2732	63	2659	80	3375
210	34	49	1524	47	1438	59	1820	72	2207	71	2193	93	2876
	37	48	1596	46	1505	58	1906	70	2311	70	2296	90	2976
	40	47	1665	45	1571	57	1989	69	2412	68	2396	87	3073
	43	46	1734	44	1635	55	2070	67	2511	67	2494	85	3167
	46	46	1801	43	1699	54	2150	66	2608	65	2567	82	3258
	49	45	1866	42	1761	53	2229	65	2703	63	2637	80	3347
	52	44	1931	41	1822	52	2287	64	2796	62	2705	78	3434
220	33	49	1553	46	1465	59	1854	71	2248	71	2234	92	2916
	36	48	1626	45	1534	57	1942	69	2355	69	2340	89	3019
	39	47	1699	44	1603	56	2029	68	2460	67	2444	86	3119
	42	46	1770	43	1669	55	2113	66	2563	66	2534	83	3216
	45	45	1839	42	1735	54	2196	65	2663	64	2608	81	3311
	48	44	1907	42	1799	53	2266	64	2762	62	2680	79	3406
	51	43	1974	41	1862	51	2326	63	2859	61	2751	77	3491
230	32	49	1580	46	1490	58	1887	70	2288	70	2273	91	2954
	35	47	1657	45	1563	57	1978	69	2399	68	2383	88	3061
	38	46	1731	44	1633	55	2068	67	2507	67	2491	85	3164
	41	45	1805	43	1703	54	2155	66	2614	65	2572	82	3264
	44	45	1877	42	1770	53	2239	65	2718	63	2648	80	3361
	47	44	1947	41	1837	52	2302	63	2820	61	2722	78	3455
	50	43	2016	41	1902	50	2363	62	2920	60	2795	76	3547

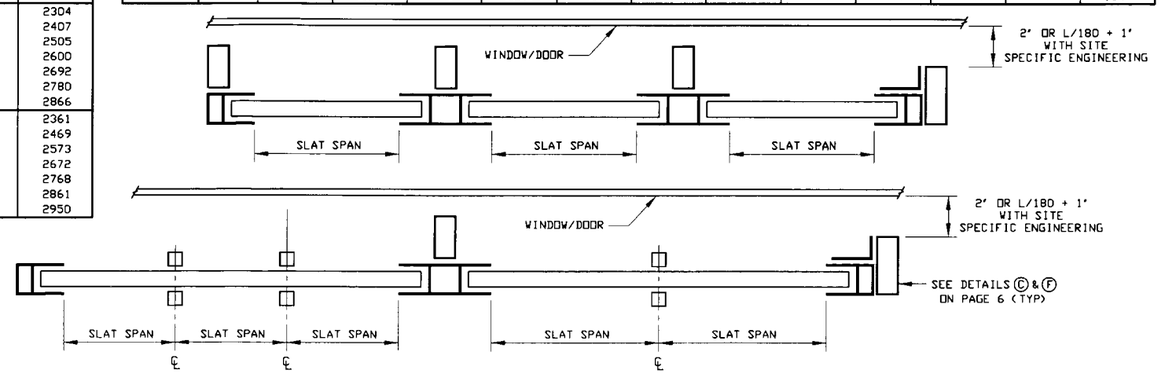

MULLION LAYOUT

KNEZEVICH & ASSOCIATES, INC.
CONSULTING ENGINEERS • PRODUCT TESTING
1260 N. UNIVERSITY DRIVE, SUITE 180 • FORT LAUDERDALE, FL 33322
TEL: (954) 382-2800 • FAX: (954) 382-2989 • FLORIDA COA #3205
WEBSITE: WWW.KNEZEVICH.COM • E-MAIL: KA@KNEZEVICH.COM

COPYRIGHT © 2002 KNEZEVICH & ASSOCIATES, INC

SUPER ROLL-UP SHUTTER

Manufacturers of Hurricane & Security Protection Products

HURST AWNING COMPANY, INC.
"QUALITY SERVICE SINCE 1937"
6865 N.W. 36th Avenue
Miami, Florida 33147
Phone: (305) 635-0900
Toll Free: (800) 327-0905
Fax: (305) 634-9078

V.J. KNEZEVICH
PROFESSIONAL ENGINEER
FL License No: PE 0010983

MAY 14 2002

revisions			
no	date	by	description
1	11/30/95		COUNTY COMMENTS
2	05/14/02	DLB	GENERAL NOTES

date 08/22/1996	
scale AS NOTED	drawn by J.W. HILL
design by VJK	checked by VJK
drawing no 95-187	
sheet 8 of 10	

HEADER LENGTH OR SHUTTER WIDTH SCHEDULE (I)

HEADER - MAX. LENGTH (INCHES)

HEADER TYPE

NEGATIVE DESIGN LOAD (P.S.F.)	MAXIMUM SLAT SPAN USED (IN)	(5) 2" x 3" STORM BAR HEIGHT								(7) 2" x 4" STORM BAR HEIGHT								(10) 2" x 5" STORM BAR HEIGHT							
		48	60	72	84	96	120	180	240	48	60	72	84	96	120	180	240	48	60	72	84	96	120	180	240
40	24	152	136	125	116	108	97	79	69	185	166	152	141	132	119	98	85	216	194	178	165	155	139	114	99
	36	152	136	125	116	108	98	71	61	185	166	152	141	132	119	99	85	216	194	178	165	155	139	114	101
	48	152	138	126	117	110	87	71	61	185	166	152	143	134	120	87	76	216	194	178	165	155	141	116	89
	60	154	138	112	104	97	87	71	61	185	168	154	143	119	107	87	76	216	194	180	167	157	141	103	89
	72	136	122	112	104	97	87	-	-	187	168	137	127	119	107	87	76	216	196	180	167	139	125	103	89
	88	136	122	112	104	97	-	-	-	166	149	137	127	119	107	-	-	218	196	160	148	139	125	103	89
50	24	136	122	112	104	97	87	72	62	166	149	137	127	119	107	87	76	194	174	160	148	139	125	103	89
	36	136	122	112	105	98	88	63	55	166	149	137	127	119	108	88	68	194	174	160	148	139	125	104	90
	48	138	124	113	93	87	78	63	55	166	149	138	128	120	96	78	68	194	174	160	148	141	126	92	80
	60	138	110	100	93	87	78	63	-	168	151	138	114	107	96	78	68	194	176	161	150	141	112	92	80
	72	122	110	100	93	87	78	-	-	168	134	123	114	107	96	78	-	196	176	161	133	125	112	92	80
	88	122	110	100	93	-	-	-	-	149	134	123	114	107	96	-	-	196	157	143	133	125	112	92	-
60	24	125	112	102	95	88	79	65	57	152	137	125	116	109	98	80	70	178	160	146	136	127	114	94	82
	36	125	112	103	96	89	71	58	50	152	137	125	116	109	99	71	62	178	160	146	136	127	114	95	83
	48	126	113	91	85	79	71	58	50	152	138	126	117	110	87	71	62	178	160	146	137	129	116	84	73
	60	112	100	91	85	79	71	-	-	154	138	112	104	98	87	71	62	180	161	148	137	114	103	84	73
	72	112	100	91	85	79	-	-	-	137	123	112	104	98	87	-	-	180	161	131	122	114	103	84	73
	88	112	100	91	-	-	-	-	-	137	123	112	104	98	-	-	-	160	143	131	122	114	103	-	-
70	24	116	104	95	88	82	73	60	46	141	127	116	108	101	90	74	65	165	148	136	126	118	106	87	76
	36	116	105	96	89	83	66	53	46	141	127	116	108	102	91	66	57	165	148	136	126	118	107	88	68
	48	117	93	85	78	73	66	53	-	143	128	117	109	90	81	66	57	165	148	137	127	120	95	78	68
	60	104	93	85	78	73	66	-	-	143	114	104	97	90	81	66	-	167	150	137	113	106	95	78	68
	72	104	93	85	78	73	-	-	-	127	114	104	97	90	81	-	-	167	133	122	113	106	95	78	-
	84	104	93	85	-	-	-	-	-	127	114	104	97	90	-	-	-	148	133	122	113	106	95	-	-
	88	104	93	-	-	-	-	-	-	127	114	104	97	90	-	-	-	148	133	122	113	106	95	-	-
80	24	108	97	88	82	77	69	57	43	132	119	109	101	94	85	70	60	155	139	127	118	111	99	82	71
	36	108	98	89	83	69	61	50	43	132	119	109	102	96	85	62	53	155	139	127	118	111	101	83	63
	48	110	87	79	73	69	61	50	-	134	120	110	90	85	76	62	53	155	141	129	120	112	89	73	63
	60	97	87	79	73	69	61	-	-	119	107	98	90	85	76	62	-	157	141	114	106	99	89	73	63
	72	97	87	79	73	-	-	-	-	119	107	98	90	85	76	-	-	139	125	114	106	99	89	73	-
	78	97	87	79	-	-	-	-	-	119	107	98	90	85	-	-	-	139	125	114	106	99	89	-	-
	85	97	87	-	-	-	-	-	-	119	107	98	90	-	-	-	-	139	125	114	106	99	89	-	-
90	24	102	91	83	77	72	65	47	41	125	112	103	95	89	80	66	57	146	131	120	112	105	94	77	67
	36	103	92	84	69	65	58	47	41	125	112	104	96	90	71	58	50	146	131	120	112	106	95	69	60
	48	91	82	75	69	65	58	-	-	126	113	92	85	80	71	58	50	146	133	122	113	94	84	69	60
	60	91	82	75	69	65	-	-	-	112	101	92	85	80	71	-	-	148	118	108	100	94	84	69	-
	72	91	82	75	-	-	-	-	-	112	101	92	85	80	-	-	-	131	118	108	100	94	84	-	-
	78	91	82	-	-	-	-	-	-	112	101	92	85	80	-	-	-	131	118	108	100	94	84	-	-
	83	91	-	-	-	-	-	-	-	112	101	92	85	-	-	-	-	131	118	108	100	94	84	-	-
100	24	97	87	79	73	69	62	45	39	119	107	98	90	85	76	62	48	139	125	114	106	99	89	73	64
	36	98	88	71	66	61	55	45	39	119	108	99	91	85	68	55	48	139	125	114	107	101	90	65	57
	48	87	78	71	66	61	55	-	-	120	96	87	81	76	68	55	-	141	126	116	95	89	80	65	57
	60	87	78	71	66	61	-	-	-	107	96	87	81	76	68	-	-	141	112	103	95	89	80	65	-
	66	87	78	71	-	-	-	-	-	107	96	87	81	76	68	-	-	125	112	103	95	89	80	-	-
	72	87	78	-	-	-	-	-	-	107	96	87	81	76	-	-	-	125	112	103	95	89	80	-	-
	80	87	-	-	-	-	-	-	-	107	96	87	81	-	-	-	-	125	112	103	95	89	80	-	-
110	24	92	83	75	71	66	59	43	37	113	102	93	86	81	72	60	46	133	119	109	101	95	85	70	61
	36	93	84	67	62	58	52	43	37	113	103	94	87	81	64	53	46	133	119	109	102	96	86	62	54
	48	83	74	67	62	58	52	-	-	115	91	83	77	72	64	53	-	134	121	110	91	85	76	62	54
	60	83	74	67	62	-	-	-	-	102	91	83	77	72	64	-	-	134	107	98	91	85	76	62	-
	66	83	74	67	-	-	-	-	-	102	91	83	77	72	-	-	-	119	107	98	91	85	76	-	-
	72	83	74	-	-	-	-	-	-	102	91	83	77	72	-	-	-	119	107	98	91	85	76	-	-
	78	83	-	-	-	-	-	-	-	102	91	83	-	-	-	-	-	119	107	98	91	85	-	-	-
120	24	88	79	72	68	63	57	41	35	109	98	89	82	77	70	57	44	127	114	105	97	91	82	67	58
	36	89	71	65	60	56	50	41	-	109	99	90	83	69	62	50	44	127	114	106	98	92	83	60	52
	48	79	71	65	60	56	50	-	-	110	87	80	74	69	62	50	-	129	116	94	87	82	73	60	52
	60	79	71	65	-	-	-	-	-	98	87	80	74	69	62	-	-	114	103	94	87	82	73	-	-
	66	79	71	-	-	-	-	-	-	98	87	80	74	69	-	-	-	114	103	94	87	82	73	-	-
	72	79	-	-	-	-	-	-	-	98	87	80	74	-	-	-	-	114	103	94	87	82	73	-	-
	77	79	-	-	-	-	-	-	-	98	87	80	-	-	-	-	-	114	103	94	87	82	-	-	-
130	24	85	76	70	65	61	54	39	34	105	94	86	79	74	67	55	42	123	110	101	93	88	78	65	56
	36	86	68	62	57	54	48	39	-	106	95	87	71	66	59	48	42	123	110	102	94	89	70	57	50
	48	76	68	62	57	54	48	-	-	94	84	77	71	66	59	48	-	124	111	90	84	78	70	57	50
	60	76	68	62	-	-	-	-	-	94	84	77	71	66	-	-	-	110	99	90	84	78	70	-	-
	66	76	68	-	-	-	-	-	-	94	84	77	71	66	-	-	-	110	99	90	84	78	70	-	-
	72	76	-	-	-	-	-	-	-	94	84	77	-	-	-	-	-	110	99	90	84	78	-	-	-
	75	76	-	-	-	-	-	-	-	94	84	77	-	-	-	-	-	110	99	90	84	78	-	-	-

NEGATIVE DESIGN LOAD (P.S.F.)	MAXIMUM SLAT SPAN USED (IN)	(12) 2" x 6" STORM BAR HEIGHT								(13) 2" x 7" STORM BAR HEIGHT								(14) 2" x 9" STORM BAR HEIGHT							
		48	60	72	84	96	120	180	240	48	60	72	84	96	120	180	240	48	60	72	84	96	120	180	240
40	24	245	221	202	188	176	159	130	114	274	246	226	210	197	177	146	127	284	254	232	214	201	179	147	127
	36	245	221	202	188	176	159	130	114	274	246	226	210	197	177	146	127	284	254	232	214	201	179	147	127
	48	245	221	202	188	176	159	132	115	274	246	226	210	197	177	146	129	284	254	232	214	201	179	147	128
	60	245	221	202	188	178	160	117	102	274	246	226	210	197	179	148	114	284	254	232	214	201	181	148	113
	72	245	221	205	190	178	160	117	102	274	246	226	212	199	179	131	114	284	254	232	214	203	181	131	113
	88	248	223	205	169	159	142	117	102	274	249	228	212	199	159	131	114	284	257	234	217	203	160	131	113
50	24	221	198	182	169	159	142	117	102	246	222	203	189	177	159	131	114	254	227	207	192	179	160	131	113
	36	221	198	182	169	159	142	117	103	246	222	203	189	177	159	131	114	254	227	207	192	179	160	131	113
	48	221	198	182	169	159	144	118	92	246	222	203	189	177	159	133	116	254	227	207	192	179	160	133	115
	60	221	198	182	171	160	144	105	92	246	222	203	189	179	161	118	103	254	227	207	192	181	162	133	102
	72	221	201	184	171	160	128	105	92	246	222	205	191	179	161	118	103	254	227	210	194	181	162	117	102
	88	223	201	164	152	142	128	105	92	249	224	205	170	159	143	118	103	257	230	210	194	160	144	117	102
60	24	202	182	167	155	145	130	107	93	226	203	186	173	163	146	120	105	232	207	189	175	164	147	120	104
	36	202	182	167	155	145	130	109	94	226	203	186	173	163	146	120	106	232	207	189	175	164	147	120	105
	48	202	182	167	155	145	132	108	84	226	203	186	173	163	146	122	94	232	207	189	175	164	147	121	105
	60	202	182	169	157	147	117	96	84	226	203	186	175	164	148	108	94	232	207	189	177	166	148	107	93
	72	205	184	169	139	130	117	96	84	226	205	188	175	164	131	108	94	232	210	191	177	166	131	107	93
	88	205	164	150	139	130	117	96	-	228	205	168	156	146	131	108	94	234	210	191	157	147	131	107	93
70	24	188	169	155	144	135	121	100	87	210	189	173	161	151	136	112	97	214	192	175	162	152	136	111	96
	36	188	169	155	144	135	121	101	88	210	189	173	161	151	136	112	98	214	192	175	162	152	136	111	97
	48	188	169	155	145	136	122	89	78	210	189	173	161	151	137	113	87	214	192	175	162	152	137	112	86
	60	188	171	157	145	136	109	89	78	210	189	175	163	153	137	100	87	214	192	177	164	153	137	99	86
	72	190	171	139	129	121	109	89	78	212	191	175	163	136	122	100	87	217	194	177	164	136	121	99	86
	84	190	152	139	129	121	109	89	-	212	191	156	145	136	122	100	87	217	194	157	145	136	121	99	86
	88	169	152	139	129	121	109	89	-	212	170	156	145	136	122	100	-	217	194	157	145	136	121	99	-
80	24	176	159	145	135	126	114	93	81	197	177	163	151	142	127	105	91	201	179	164	152	142	127	104	90
	36	176	159	145	135	126	114	94	82	197	177	163	151	142	127	106	92	201	179	164	152	142	127	105	91
	48	176	159	145	136	128	115	84	73	197	177	163	151	143	129	94	82	201	179	164	152	143	128	105	80
	60	178	160	147	136	114	102	84	73	197	179	164	153	143	114	94	82	201	181	166	153	143	113	93	80
	72	178	160	130	121	114	102	84	73	199	179	164	136	127	114	94	82	203	181	166	136	127	113	93	80
	78	178	142	130	121	114	102	84	-	199	179	146	136	127	114	94	82	203	181	147	136	127	113	93	80
	85	159	142	130	121	114	102	-	-	199	159	146	136	127	114	94	-	203	160	147	136	127	113	93	-
90	24	167	150	137	127	120	107	88	77	186	168	154	143	134	120	99	86	189	169	154	143	134	120	98	85
	36	167	150	137	127	120	109	89	69	186	168	154	143	134	120	100	87	189	169	154	143	134	120	99	86
	48	167	150	139	129	121	108	79	69	186	168	154	144	135	122	89	77	189	169	154	143	135	121	87	76
	60	169	151	139	114	107	96	79	69	186	169	155	144	135	108	89	77	189	171	156	145	135	107	87	76
	72	169	135	123	114	107	96	79	-	188	169	138	128	120	108	89	77	191	171	156	128	120	107	87	76
	78	150	135	123	114	107	96	79	-	188	151	138	128	120	108	89	-	191	171	138	128	120	107	87	-
	83	150	135	123	114	107	96	-	-	188	151	138	128	120	108	89	-	191	151	138	128	120	107	87	-
100	24	159	142	130	121	114	102	84	73	177	159	146	136	127	114	94	82	179	160	147	136	127	113	93	80
	36	159	142	130	121	114	103	85	65	177	159	146	136	127	114	95	83	179	160	147	136	127	113	94	81
	48	159	144	132	122	115	92	75	65	177	159	146	137	129	116	84	73	179	160	147	137	128	115	83	72
	60	160	144	117	109	102	92	75	65	179	161	148	137	114	103	84	73	181	162	148	137	113	102	83	72
	66	160	128	117	109	102	92	75	-	179	161	148	122	114	103	84	73	181	162	148	121	113	102	83	72
	72	160	128	117	109	102	92	75	-	179	161	131	122	114	103	84	73	181	162	131	121	113	102	83	-
	80	142	128	117	109	102	92	-	-	179	143	131	122	114	103	84	-	181	144	131	121	113	102	83	-
110	24	151	136	125	116	108	97	80	70	169	152	140	130	122	109	90	78	171	153	140	129	121	108	88	77
	36	151	136	125	116	108	98	72	62	169	152	140	130	122	109	91	70	171	153	140	129	121	108	89	68
	48	151	138	126	117	110	87	72	62	169	152	141	131	123	110	81	70	171	153	141	131	122	109	79	68
	60	153	138	112	104	97	87	72	62	171	154	141	116	109	98	81	70	173	155	141	131	108	97	79	68
	66	153	122	112	104	97	87	72	-	171	154	125	116	109	98	81	70	173	155	125	116	108	97	79	68
	72	136	122	112	104	97	87	-	-	171	137	125	116	109	98	81	-	173	137	125	116	108	97	79	-
	78	136	122	112	104	97	87	-	-	152	137	125	116	109	98	81	-	173	137	125	116	108	97	79	-
120	24	145	130	120	111	104	93	77	67	163	146	134	124	117	105	86	75	164	147	134	124	116	104	85	73
	36	145	130	120	111	105	94	69	59	163	146	134	124	117	106	87	67	164	147	134	124	116	105	86	66
	48	145	132	121	112	93	84	69	59	163	146	135	126	118	94	77	67	164	147	135	125	117	105	76	66
	60	147	117	107	100	93	84	69	-	164	148	135	112	105	94	77	67	166	148	135	111	104	93	76	66
	66	147	117	107	100	93	84	69	-	164	148	120	112	105	94	77	67	166	148	120	111	104	93	76	-
	72	130	117	107	100	93	84	-	-	164	131	120	112	105	94	77	-	166	131	120	111	104	93	76	-
	77	130	117	107	100	93	84	-	-	146	131	120	112	105	94	77	-	166	131	120	111	104	93	-	-
130	24	140	126	115	107	100	90	74	65	156	141	129	120	112	101	83	73	157	141	128	119	111	100	81	71
	36	140	126	115	108	101	91	66	57	156	141	129	120	112	102	84	64	157	141	128	119	111	101	82	63
	48	141	127	116	108	90	81	66	57	156	142	130	121	113	90	74	64	157	142	130	120	113	89	73	63
	60	141	113	103	96	90	81	66	-	158	142	116	107	101	90	74	64	159	142	130	106	100	89	73	63
	66	126	113	103	96	90	81	-	-	158	126	116	107	101	90	74	-	159	142	115	106	100	89	73	-
	72	126	113	103	96	90	81	-	-	141	126	116	107	101	90	74	-	159	126	115	106	100	89	73	-
	75	126	113	103	96	90	81	-	-	141	126	116	107	101	90	-	-	141	126	115	106	100	89	-	-

NOTE: INTERPOLATE FOR HEADER SPANS AND REACTIONS BETWEEN THOSE SHOWN ON THIS SHEET.
FOR HEADER REACTION DETERMINATION AND END CONNECTION DETAILS/ANCHORS, SEE SCHEDULE E, SHEET 5 OF 10.

PRODUCT REVISED
as complying with the Florida Buiding Code
Acceptance No. 02-0315.07
Expiration Date February 8, 2017
By:
Miami Dade Product Control Division

KNEZEVICH & ASSOCIATES, INC.
CONSULTING ENGINEERS • PRODUCT TESTING
1260 N. UNIVERSITY DRIVE, SUITE 180 • FORT LAUDERDALE, FL 33322
TEL: (954) 382-2800 • FAX: (954) 382-2989 • FLORIDA COA #3205
WEBSITE: WWW.KNEZEVICH.COM • E-MAIL: KA@KNEZEVICH.COM

COPYRIGHT © 2002 KNEZEVICH & ASSOCIATES, INC

SUPER ROLL-UP SHUTTER

Manufacturers of Hurricane & Security Protection Products
6865 N.W. 36th Avenue
Miami, Florida 33147
Phone: (305) 635-0900
Toll Free: (800) 327-0905
Fax: (305) 634-9078
HURST AWNING COMPANY, INC. "QUALITY SERVICE SINCE 1957"

V.J. KNEZEVICH
PROFESSIONAL ENGINEER
FL License No: PE 0010983

MAY 1 4 2002

revisions			
no	date	by	description
1	11/30/95		COUNTY COMMENTS
2	05/14/02	OLB	GENERAL NOTES

date 08/22/1996
scale AS NOTED
drawn by J.W. HILL
design by VJK
checked by VJK
drawing no 95-187
sheet 9 of 10

HEADER LENGTH OR SHUTTER WIDTH SCHEDULE (I)

HEADER - MAX. LENGTH (INCHES)

HEADER TYPE

NEGATIVE DESIGN LOAD (P.S.F.)	MAXIMUM SLAT SPAN USED (IN)	(5) 2" x 3" STORM BAR HEIGHT								(7) 2" x 4" STORM BAR HEIGHT							
		48	60	72	84	96	120	180	240	48	60	72	84	96	120	180	240
140	24	82	73	68	63	59	46	38	33	101	90	82	76	72	65	47	40
	36	83	66	60	55	52	46	38	-	102	91	83	68	64	57	47	40
	48	73	66	60	55	52	-	-	-	90	81	74	68	64	57	-	-
	54	73	66	60	55	-	-	-	-	90	81	74	68	64	57	-	-
	60	73	66	-	-	-	-	-	-	90	81	74	68	64	-	-	-
	66	73	-	-	-	-	-	-	-	90	81	74	68	-	-	-	-
	74	-	-	-	-	-	-	-	-	90	81	-	-	-	-	-	-
150	24	79	72	65	60	57	45	37	32	98	87	80	74	70	62	45	39
	36	71	63	58	53	50	45	37	-	99	88	71	66	62	55	45	39
	48	71	63	58	53	50	-	-	-	87	78	71	66	62	55	-	-
	54	71	63	58	-	-	-	-	-	87	78	71	66	62	55	-	-
	60	71	63	-	-	-	-	-	-	87	78	71	66	62	-	-	-
	66	71	-	-	-	-	-	-	-	87	78	71	-	-	-	-	-
	73	-	-	-	-	-	-	-	-	87	78	-	-	-	-	-	-
160	24	77	69	63	59	55	43	35	31	94	85	77	71	68	60	44	38
	36	69	61	56	52	48	43	-	-	96	85	69	64	60	53	44	38
	48	69	61	56	52	48	-	-	-	85	76	69	64	60	53	-	-
	54	69	61	56	-	-	-	-	-	85	76	69	64	60	-	-	-
	60	69	61	-	-	-	-	-	-	85	76	69	64	-	-	-	-
	66	69	-	-	-	-	-	-	-	85	76	69	-	-	-	-	-
	71	-	-	-	-	-	-	-	-	85	76	-	-	-	-	-	-
170	24	74	67	61	57	47	42	34	30	92	82	75	70	66	59	42	37
	36	66	59	54	50	47	42	-	-	93	83	67	62	58	52	42	37
	48	66	59	54	50	-	-	-	-	82	73	67	62	58	52	-	-
	54	66	59	54	-	-	-	-	-	82	73	67	62	58	-	-	-
	60	66	-	-	-	-	-	-	-	82	73	67	62	-	-	-	-
	66	66	-	-	-	-	-	-	-	82	73	67	-	-	-	-	-
	70	-	-	-	-	-	-	-	-	82	73	-	-	-	-	-	-
180	24	72	65	60	55	46	41	33	29	89	80	73	68	64	57	41	36
	36	65	58	53	49	46	41	-	-	90	71	65	60	56	50	41	-
	48	65	58	53	49	-	-	-	-	80	71	65	60	56	50	-	-
	54	65	58	-	-	-	-	-	-	80	71	65	60	56	-	-	-
	60	65	-	-	-	-	-	-	-	80	71	65	60	-	-	-	-
	66	-	-	-	-	-	-	-	-	80	71	-	-	-	-	-	-
	69	-	-	-	-	-	-	-	-	80	71	-	-	-	-	-	-
190	24	71	64	58	48	44	40	32	28	87	78	72	66	62	55	40	35
	36	63	56	51	48	44	40	-	-	88	69	63	59	55	49	40	-
	48	63	56	51	-	-	-	-	-	78	69	63	59	55	49	-	-
	54	63	56	-	-	-	-	-	-	78	69	63	59	55	-	-	-
	60	63	-	-	-	-	-	-	-	78	69	63	-	-	-	-	-
	66	-	-	-	-	-	-	-	-	78	69	-	-	-	-	-	-
	68	-	-	-	-	-	-	-	-	78	69	-	-	-	-	-	-
200	24	69	62	57	46	43	39	32	27	85	76	70	65	60	48	39	34
	30	69	55	50	46	43	39	32	-	85	76	70	57	53	48	39	34
	36	61	55	50	46	43	39	-	-	85	68	62	57	53	48	39	-
	42	61	55	50	46	43	-	-	-	76	68	62	57	53	48	-	-
	48	61	55	50	-	-	-	-	-	76	68	62	57	53	-	-	-
	54	61	55	-	-	-	-	-	-	76	68	62	57	-	-	-	-
	68	-	-	-	-	-	-	-	-	76	68	-	-	-	-	-	-
210	24	68	60	55	45	42	38	31	27	82	74	68	63	59	47	38	33
	30	60	53	49	45	42	38	31	-	83	75	68	56	52	47	38	33
	36	60	53	49	45	42	38	-	-	83	66	60	56	52	47	38	-
	42	60	53	49	45	42	-	-	-	74	66	60	56	52	47	-	-
	48	60	53	49	-	-	-	-	-	74	66	60	56	52	-	-	-
	54	60	-	-	-	-	-	-	-	74	66	60	56	-	-	-	-
	67	-	-	-	-	-	-	-	-	74	-	-	-	-	-	-	-
220	24	66	59	48	44	41	37	30	26	81	72	67	62	58	46	37	32
	30	58	52	48	44	41	37	30	-	81	73	59	54	51	46	37	32
	36	58	52	48	44	41	37	-	-	81	64	59	54	51	46	37	-
	42	58	52	48	44	-	-	-	-	72	64	59	54	51	46	-	-
	48	58	52	-	-	-	-	-	-	72	64	59	54	51	-	-	-
	54	58	-	-	-	-	-	-	-	72	64	59	54	-	-	-	-
	66	-	-	-	-	-	-	-	-	72	-	-	-	-	-	-	-
230	24	65	58	47	43	40	36	30	26	79	71	65	60	56	45	36	32
	30	57	51	47	43	40	36	-	-	80	71	58	53	50	45	36	32
	36	57	51	47	43	40	36	-	-	70	63	58	53	50	45	36	-
	42	57	51	47	43	-	-	-	-	70	63	58	53	50	45	-	-
	48	57	51	-	-	-	-	-	-	70	63	58	53	50	-	-	-
	54	57	-	-	-	-	-	-	-	70	63	58	-	-	-	-	-
	65	-	-	-	-	-	-	-	-	70	-	-	-	-	-	-	-

NEGATIVE DESIGN LOAD (P.S.F.)	MAXIMUM SLAT SPAN USED (IN)	(10) 2" x 5" STORM BAR HEIGHT								(12) 2" x 6" STORM BAR HEIGHT							
		48	60	72	84	96	120	180	240	48	60	72	84	96	120	180	240
140	24	118	106	97	90	84	76	62	48	135	121	111	103	97	87	72	62
	36	118	107	98	91	85	68	55	48	135	121	111	104	98	88	64	55
	48	120	95	87	81	76	68	55	-	136	122	112	92	87	78	64	55
	54	106	95	87	81	76	68	55	-	136	122	100	92	87	78	64	55
	60	106	95	87	81	76	68	-	-	136	109	100	92	87	78	64	-
	66	106	95	87	81	76	68	-	-	121	109	100	92	87	78	-	-
	74	106	95	87	81	76	-	-	-	121	109	100	92	87	78	-	-
150	24	114	103	94	87	82	73	60	46	130	117	107	100	93	84	69	60
	36	114	104	95	88	83	65	53	46	130	117	107	101	94	85	61	53
	48	116	92	84	78	73	65	53	-	132	118	108	89	84	75	61	53
	54	103	92	84	78	73	65	-	-	132	105	96	89	84	75	61	-
	60	103	92	84	78	73	65	-	-	117	105	96	89	84	75	61	-
	66	103	92	84	78	73	-	-	-	117	105	96	89	84	75	-	-
	73	103	92	84	78	73	-	-	-	117	105	96	89	84	75	-	-
160	24	111	99	91	84	79	71	58	45	126	114	104	97	90	81	67	58
	36	111	101	92	85	71	63	52	45	126	114	105	98	91	82	59	51
	48	112	89	82	76	71	63	52	-	128	115	93	87	81	73	59	51
	54	99	89	82	76	71	63	-	-	128	102	93	87	81	73	59	-
	60	99	89	82	76	71	63	-	-	114	102	93	87	81	73	-	-
	66	99	89	82	76	71	-	-	-	114	102	93	87	81	73	-	-
	71	99	89	82	76	-	-	-	-	114	102	93	87	81	73	-	-
170	24	108	97	88	82	77	69	57	43	123	110	101	94	88	79	65	56
	36	109	98	89	83	69	61	50	43	123	110	102	95	89	71	58	50
	48	109	87	79	73	69	61	50	-	124	112	91	84	79	71	58	50
	54	97	87	79	73	69	61	-	-	124	99	91	84	79	71	58	-
	60	97	87	79	73	69	61	-	-	110	99	91	84	79	71	-	-
	66	97	87	79	73	69	-	-	-	110	99	91	84	79	71	-	-
	70	97	87	79	73	-	-	-	-	110	99	2	84	79	71	-	-
180	24	105	94	86	80	75	67	55	42	120	107	98	91	85	77	63	55
	36	106	95	87	71	67	60	49	42	120	107	99	92	86	69	56	49
	48	94	84	77	71	67	60	49	-	121	108	88	82	77	69	56	49
	54	94	84	77	71	67	60	-	-	121	96	88	82	77	69	56	-
	60	94	84	77	71	67	-	-	-	107	96	88	82	77	69	-	-
	66	94	84	77	71	67	-	-	-	107	96	88	82	77	69	-	-
	69	94	84	77	71	-	-	-	-	107	96	88	82	77	-	-	-
190	24	102	92	84	78	73	66	47	41	116	105	96	89	83	75	62	47
	36	103	93	85	69	65	58	47	41	116	106	97	90	84	67	55	47
	48	92	82	75	69	65	58	-	-	118	94	86	80	75	67	55	-
	54	92	82	75	69	65	58	-	-	105	94	86	80	75	67	55	-
	60	92	82	75	69	65	-	-	-	105	94	86	80	75	67	-	-
	66	92	82	75	69	-	-	-	-	105	94	86	80	75	67	-	-
	68	92	82	75	69	-	-	-	-	105	94	86	80	75	-	-	-
200	24	99	89	82	76	71	64	46	40	114	102	93	87	81	73	60	46
	30	99	90	83	76	71	57	46	40	114	102	93	88	82	74	53	46
	36	101	90	83	68	63	57	46	40	114	103	94	88	82	65	53	46
	42	101	80	73	68	63	57	46	-	115	103	94	78	73	65	53	46
	48	89	80	73	68	63	57	-	-	115	92	84	78	73	65	53	-
	54	89	80	73	68	63	57	-	-	102	92	84	78	73	65	-	-
	68	89	80	73	68	-	-	-	-	102	92	84	78	73	-	-	-
210	24	97	87	80	74	70	62	45	39	111	100	91	85	79	72	59	45
	30	97	88	81	75	70	55	45	39	111	100	91	86	80	72	52	45
	36	98	88	71	66	62	55	45	39	111	101	92	86	71	64	52	45
	42	98	78	71	66	62	55	45	-	112	101	82	76	71	64	52	45
	48	87	78	71	66	62	55	-	-	112	89	82	76	71	64	52	-
	54	87	78	71	66	62	55	-	-	100	89	82	76	71	64	-	-
	67	87	78	71	-	-	-	-	-	100	89	82	76	71	-	-	-
220	24	95	85	78	72	68	61	44	38	108	97	89	83	78	70	57	44
	30	95	86	79	73	68	54	44	38	108	97	89	84	78	70	51	44
	36	96	86	70	64	60	54	44	38	108	98	90	84	69	62	51	44
	42	96	76	70	64	60	54	44	-	110	98	80	74	69	62	51	44
	48	85	76	70	64	60	54	-	-	110	87	80	74	69	62	51	-
	54	85	76	70	64	60	-	-	-	97	87	80	74	69	62	-	-
	66	85	76	70	-	-	-	-	-	97	87	80	74	69	-	-	-
230	24	93	83	76	71	67	60	43	37	106	95	87	81	76	69	56	43
	30	93	84	77	71	59	53	43	37	106	95	88	82	77	69	50	43
	36	94	84	68	63	59	53	43	37	107	96	88	82	68	61	50	43
	42	83	75	68	63	59	53	43	-	107	96	78	73	68	61	50	43
	48	83	75	68	63	59	53	-	-	95	86	78	73	68	61	50	-
	54	83	75	68	63	59	-	-	-	95	86	78	73	68	61	-	-
	65	83	75	68	-	-	-	-	-	95	86	78	73	68	-	-	-

NEGATIVE DESIGN LOAD (P.S.F.)	MAXIMUM SLAT SPAN USED (IN)	(13) 2" x 7" STORM BAR HEIGHT								(14) 2" x 9" STORM BAR HEIGHT							
		48	60	72	84	96	120	180	240	48	60	72	84	96	120	180	240
140	24	151	136	124	115	108	97	80	70	152	136	124	115	107	96	78	69
	36	151	136	124	115	108	98	72	62	152	136	124	115	108	97	79	61
	48	151	137	126	117	109	87	72	62	152	137	125	116	108	86	70	61
	54	153	137	126	104	97	87	72	62	153	137	125	103	96	86	70	61
	60	153	137	112	104	97	87	72	62	153	137	111	103	96	86	70	61
	66	153	122	112	104	97	87	72	-	153	121	111	103	96	86	70	-
	74	136	122	112	104	97	87	-	-	136	121	111	103	96	86	-	-
150	24	146	131	120	112	105	94	77	68	147	131	120	111	104	93	76	66
	36	146	131	120	112	106	95	69	60	147	131	120	111	105	94	68	59
	48	146	133	122	113	94	84	69	60	147	133	121	112	105	83	68	59
	54	148	133	122	100	94	84	69	60	148	133	121	99	93	83	68	59
	60	148	118	108	100	94	84	69	60	148	133	107	99	93	83	68	-
	66	148	118	108	100	94	84	69	-	148	117	107	99	93	83	68	-
	73	131	118	108	100	94	84	-	-	131	117	107	99	93	83	-	-
160	24	142	127	117	108	101	91	75	66	142	127	116	107	100	90	73	64
	36	142	127	117	108	103	92	67	58	142	127	116	107	101	91	66	57
	48	143	129	118	109	91	82	67	58	143	128	117	108	90	80	66	57
	54	143	129	105	97	91	82	67	58	143	128	117	96	90	80	66	57
	60	143	114	105	97	91	82	67	-	143	113	104	96	90	80	66	-
	66	127	114	105	97	91	82	67	-	143	113	104	96	90	80	-	-
	71	127	114	105	97	91	82	-	-	127	113	104	96	90	80	-	-
170	24	138	124	113	105	99	88	73	64	138	123	112	104	97	87	72	62
	36	138	124	113	106	100	89	65	56	138	123	112	105	98	88	64	55
	48	139	125	114	94	88	79	65	56	139	124	114	105	87	78	64	55
	54	139	125	102	94	88	79	65	56	139	124	101	93	87	78	64	55
	60	139	111	102	94	88	79	65	-	139	110	101	93	87	78	64	-
	66	124	111	102	94	88	79	-	-	123	110	101	93	87	78	-	-
	70	124	111	102	94	88	79	-	-	123	110	101	93	87	78	-	-
180	24	134	120	110	102	96	86	71	62	134	120	109	101	95	85	70	60
	36	134	120	110	103	97	87	63	55	134	120	109	102	96	86	62	53
	48	135	122	111	92	86	77	63	55	135	121	110	90	85	76	62	53
	54	135	122	99	92	86	77	63	55	135	121	98	90	85	76	62	-
	60	135	108	99	92	86	77	63	-	135	107	98	90	85	76	62	-
	66	120	108	99	92	86	77	-	-	120	107	98	90	85	76	-	-
	69	120	108	99	92	86	77	-	-	120	107	98	90	85	76	-	-
190	24	130	117	107	100	93	84	70	60	130	116	106	98	92	82	68	59
	36	130	117	109	101	94	85	62	53	130	116	107	100	93	83	60	52
	48	132	118	108	89	84	75	62	53	132	118	107	88	82	74	60	52
	54	132	105	96	89	84	75	62	-	132	118	95	88	82	74	60	-
	60	117	105	96	89	84	75	62	-	132	104	95	88	82	74	60	-
	66	117	105	96	89	84	75	-	-	116	104	95	88	82	74	-	-
	68	117	105	96	89	84	75	-	-	116	104	95	88	82	74	-	-
200	24	127	114	105	97	91	82	68	59	127	113	104	96	90	80	66	57
	30	127	114	105	97	91	83	68	52	127	113	104	96	91	81	66	51
	36	127	114	106	98	92	83	60	52	127	113	105	97	91	81	59	51
	42	127	116	106	98	82	73	60	52	127	115	105	97	91	72	59	51
	48	129	116	94	87	82	73	60	52	128	115	105	86	80	72	59	51
	54	129	103	94	87	82	73	60	-	128	102	93	86	80	72	59	-
	68	114	103	94	87	82	73	-	-	113	102	93	86	80	72	-	-
210	24	124	112	102	95	89	80	66	57	124	111	101	94	88	78	65	56
	30	124	112	102	95	90	81	59	51	124	111	101	94	89	79	65	50
	36	124	112	103	96	90	72	59	51	124	111	102	95	89	79	57	50
	42	126	113	103	96	80	72	59	51	125	112	102	95	78	70	57	50
	48	126	113	92	85	80	72	59	51	125	112	90	84	78	70	57	50
	54	126	100	92	85	80	72	59	-	125	99	90	84	78	70	57	-
	67	112	100	92	85	80	72	-	-	111	99	90	84	78	70	-	-
220	24	122	109	100	93	87	78	65	56	121	108	99	91	86	77	63	55
	30	122	109	100	93	88	79	57	50	121	108	99	91	87	77	56	48
	36	122	109	101	94	88	70	57	50	121	108	100	92	87	68	56	48
	42	123	110	101	83	78	70	57	50	122	109	100	92	77	68	56	48
	48	123	110	90	83	78	70	57	50	122	109	88	82	77	68	56	48
	54	123	98	90	83	78	70	57	-	122	97	88	82	77	68	56	-
	66	109	98	90	83	78	70	-	-	108	97	88	82	77	68	-	-
230	24	119	107	98	91	85	76	63	55	118	106	97	89	84	75	62	54
	30	119	107	98	91	86	77	56	48	118	106	97	89	85	76	55	47
	36	119	108	99	92	86	69	56	48	118	107	98	90	85	67	55	47
	42	120	108	99	82	76	69	56	48	120	107	98	80	75	67	55	47
	48	120	108	88	82	76	69	56	48	120	107	86	80	75	67	55	-
	54	107	96	88	82	76	69	56	-	120	95	86	80	75	67	55	-
	65	107	96	88	82	76	69	-	-	106	95	86	80	75	67	-	-

NOTE: INTERPOLATE FOR HEADER SPANS AND REACTIONS BETWEEN THOSE SHOWN ON THIS SHEET.
FOR HEADER REACTION DETERMINATION AND END CONNECTION DETAILS/ANCHORS, SEE SCHEDULE E, SHEET 5 OF 10.

PRODUCT REVISED
as complying with the Florida Building Code
Acceptance No 02-0315.07
Expiration Date February 8, 2007
By
Miami Dade Product Control Division

KNEZEVICH & ASSOCIATES, INC.
CONSULTING ENGINEERS • PRODUCT TESTING
1260 N. UNIVERSITY DRIVE, SUITE 180 • FORT LAUDERDALE, FL 33322
TEL: (954) 382-2800 • FAX: (954) 382-2989 • FLORIDA COA #3205
WEBSITE: WWW.KNEZEVICH.COM • E-MAIL: KA@KNEZEVICH.COM

COPYRIGHT © 2002 KNEZEVICH & ASSOCIATES, INC

SUPER ROLL-UP SHUTTER
Manufacturers of Hurricane & Security Protection Products
HURST AWNING COMPANY, INC. QUALITY SERVICE SINCE 1957
6865 N.W. 36th Avenue
Miami, Florida 33147
Phone: (305) 635-0900
Toll Free: (800) 327-0905
Fax: (305) 634-9078

V.J. KNEZEVICH
PROFESSIONAL ENGINEER
FL License No: PE-0010983

MAY 14 2002

revisions

no	date	by	description
1	11/30/95		COUNTY COMMENTS
2	05/14/02	OLB	GENERAL NOTES

date 08/22/1996
scale AS NOTED
drawn by J.W. HILL
design by VJK
checked by VJK
drawing no. 95-187
sheet 10 of 10