MIAMI-DADE

BUILDING CODE COMPLIANCE OFFICE (BCCO)
PRODUCT CONTROL DIVISION

MIAMI-DADE COUNTY, FLORIDA
METRO-DADE FLAGLER BUILDING
140 WEST FLAGLER STREET, SUITE 1603
MIAMI, FLORIDA 33130-1563
(305) 375-2901 FAX (305) 375-2908

NOTICE OF ACCEPTANCE (NOA)

F.P.G. Wholesale Inc.
7190 Coral Way
Miami, FL 33155

SCOPE:

This NOA is being issued under the applicable rules and regulations governing the use of construction materials. The documentation submitted has been reviewed by Miami-Dade County Product Control Division and accepted by the Board of Rules and Appeals (BORA) to be used in Miami Dade County and other areas where allowed by the Authority Having Jurisdiction (AHJ).

This NOA shall not be valid after the expiration date stated below. The Miami-Dade County Product Control Division (In Miami Dade County) and/or the AHJ (in areas other than Miami Dade County) reserve the right to have this product or material tested for quality assurance purposes. If this product or material fails to perform in the accepted manner, the manufacturer will incur the expense of such testing and the AHJ may immediately revoke, modify, or suspend the use of such product or material within their jurisdiction. BORA reserves the right to revoke this acceptance, if it is determined by Miami-Dade County Product Control Division that this product or material fails to meet the requirements of the applicable building code.

This product is approved as described herein, and has been designed to comply with the High Velocity Hurricane Zone of the Florida Building Code.

DESCRIPTION: Framed Block Glued Core Outswing Flush Wood Door

APPROVAL DOCUMENT: Drawing No. 99006, titled "FBMA Framed Block Glued Core Wood Door", sheets 1 through 2 of 2, prepared, by E.D. & D., dated 12/06/99, bearing the Miami-Dade County Product Control Approval stamp with the Notice of Acceptance number and expiration date by the Miami-Dade County Product Control Division.

MISSILE IMPACT RATING: Large and Small Missile Impact

LABELING: Each unit shall bear a permanent label with the manufacturer's name or logo, city, state and following statement: "Miami-Dade County Product Control Approved", unless otherwise noted herein.

RENEWAL of this NOA shall be considered after a renewal application has been filed and there has been no change in the applicable building code negatively affecting the performance of this product.

TERMINATION of this NOA will occur after the expiration date or if there has been a revision or change in the materials, use, and/or manufacture of the product or process. Misuse of this NOA as an endorsement of any product, for sales, advertising or any other purposes shall automatically terminate this NOA. Failure to comply with any section of this NOA shall be cause for termination and removal of NOA.

ADVERTISEMENT: The NOA number preceded by the words Miami-Dade County, Florida, and followed by the expiration date may be displayed in advertising literature. If any portion of the NOA is displayed, then it shall be done in its entirety.

INSPECTION: A copy of this entire NOA shall be provided to the user by the manufacturer or its distributors and shall be available for inspection at the job site at the request of the Building Official.

This NOA **renews NOA # 99-0316.05** and, consists of this page 1 as well as approval document mentioned above. The submitted documentation was reviewed by **Raul Rodriguez.**

PRODUCT CONTROL ACCEPTED

DOOR AND FRAME SYSTEM				
ITEM #	DESCRIPTION (WOOD STAVE CORE)			
1	DOOR MODEL FRAMED BLOCK GLUED CORE	PREMDOR OR APPROVED EQUAL WITH NOA		
2	#JR300 T-ASTRAGAL WITH (2) 1/8" SCHED 40x 8-1/4" LONG STL PIPE SLEEVES BORED TO CLEAR #3. WITH GLUE, 7/16" X 2" STAPLES 15" OC, & (16) #8 X 2" FHWS (4 EA SIDE OF SLEEVE). WEATHERSTRIP - SCHLEGEL #QDS-650			
3	12" EXTENSION FLUSH BOLTS - QUALITY MFG #1358 1/2"ø X 1-1/2" LONG STEEL W/ 3/4" THROW AT ASTRAGAL AT TOP AND BOTTOM. 0.077" THICK BRASS STRIKE AT FRAME HEADER ABOVE INACTIVE DOOR AT UPPER CONCEALED FLUSH BOLT. THERE ARE NO STRIKES AT THE BOTTOM OF DOORS. THE LOCKS ENGAGE HOLES DRILLED INTO THE ALUMINUM THRESHOLD.			
4	SINGLE SURFACE DEAD BOLTS - MFR & MODEL #. WITH A MODIFIED M.A.G. ENG. LOCK REINFORCER #20-PB AND STRIKE ASSEMBLY CONSISTING OF: 0.062" THICK BRASS SURFACE STRIKE WITH A CONCEALED 0.120" THICK, PLATED STEEL REINFORCING PLATE.		KWIKSET #666	OR SCHLAGE #B180N
5	PASSAGE LOCK - MFR & MODEL #. CENTER 38" FROM BOTTOM OF DOOR. 0.050" THICK BRASS STRIKE		KWIKSET #200E	OR SCHLAGE #F10N
6	SINGLE CYLINDER DEAD BOLT - MFR & MODEL #. CENTER 8" ABOVE PASSAGE LOCK. STRIKE ASSEMBLY CONSISTS OF 0.062" THICK BRASS SURFACE STRIKE WITH A CONCEALED 0.120" THICK, PLATED STEEL REINFORCING PLATE.		KWIKSET #660	OR SCHLAGE #B160N
7	4" X 4" BUTT HINGE WITH SAFETY STUD - HAGER #1843 OR PENROD #MH40AUAC. CENTER 8-3/4" AND 84" FROM TOP OF DOOR. SCREWS - TO DOOR: (4) #9 X 3/4" FHWS. TO JAMB: (3) #9 X 3/4" FHWS & (1) #9 X 2-1/2" FHWS.			
8	4" X 4" BUTT HINGE - HAGER #1841 OR PENROD #MH40AUWS. CENTER 31-3/4" AND 58" FROM TOP OF DOOR. SCREWS - TO DOOR: (4) #9 X 3/4" FHWS. TO JAMB: (3) #9 X 3/4" FHWS & (1) #9 X 2-1/2" FHWS.			
9	THRESHOLD-MODEL #JR100 (DEPTH X NOSE HEIGHT) WTHRSTRIP-SCHLEGEL MODEL #	2-1/2" X 1-1/8" #QDS-650	OR 2-1/2" X 7/8" #QDS-650	OR 3" X 1-1/8" #QEB-928
10	WOOD FRAME - 1-1/4" X	4-9/16"	OR	5-1/4"
	RABBETTED AND KERFED FOR WEATHERSTRIP. EACH CORNER WAS CAULKED AND ATTACHED WITH (3) 3/4" X 2" GUN DRIVEN STAPLES. WEATHERSTRIP - SCHLEGEL #QDS-650.			
11	HEAD PLATE TO MATCH FRAME - WITH 3/8" PLYWOOD ATTACHED WITH GLUE & 3/4" STAPLES 1" TO 1-1/4" FROM EACH EDGE & 8-3/4" (AVG) O.C AND (3) STAPLES PER JAMB.			
	WEATHERSTRIP - SCHLEGEL MODEL #	#QDS-650	OR	QEB-928
12	2" X 3" X 0.007" VINYL FLAP GLUED TO BOTTOM OF ASTRAGAL.			
13	FRAME SCREWS TO 2X WOOD BUCK - #10 X 2-1/2" FHWS. 6" FROM CORNERS & 24" OC (MAX). FRAME JAMBS AND @ HEAD 6" FROM CORNERS AND 20" O.C. MAX.			
13a	FRAME SCREWS TO MASONRY - 3/16" FH TAPCONS W/ 1-1/4" MIN. EMBEDMENT INTO MASONRY. SPACING IS SAME AS ABOVE.			
14	PEMKO #S88 SELF ADHESIVE WEATHERSTRIP AT OUTSIDE EDGE AT TOP OF BOTH DOORS.			
	PEMKO #S88 AT OUTSIDE EDGE AT LOCK STILE OF ACTIVE DOOR.			OMITTED
15	PEMKO #345AV RAIN DRIP & SWEEP ATTACHED WITH #8 x 5/8" RHSMS @ 6" O.C.			
16	PAD/DIVERTER AT BOTTOM OF EACH JAMB.	1" X 2" X 3/16" SELF ADHESIVE PILE PAD.		
	PAD/DIVERTER AT BOTTOM OF ASTRAGAL.			

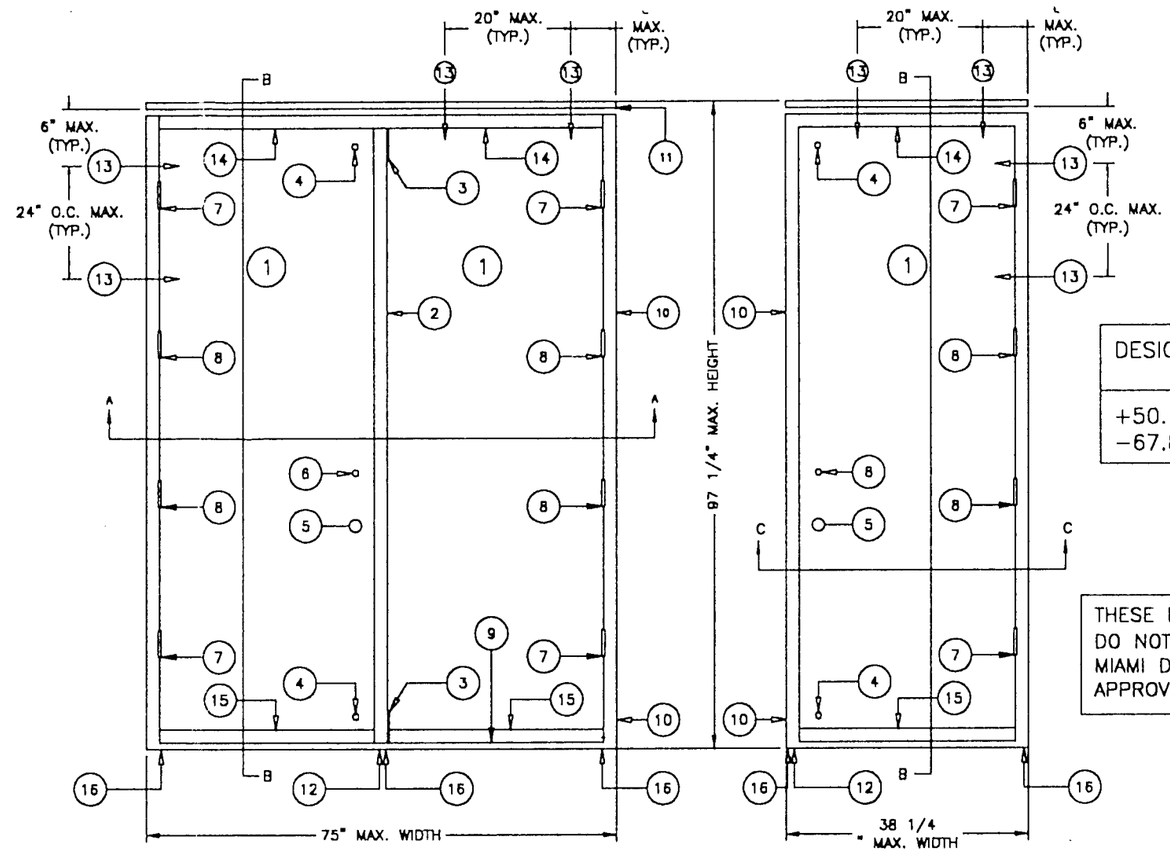

DESIGN PRESSURE RATING
+50.1 PSF
-67.8 PSF

THESE DOORS DO NOT REQUIRE MIAMI DADE COUNTY APPROVED SHUTTERS.

ITEM #2
J-R #300 ASTRAGAL W/ SLEEVES
& KERFED FOR WEATHERSTRIP

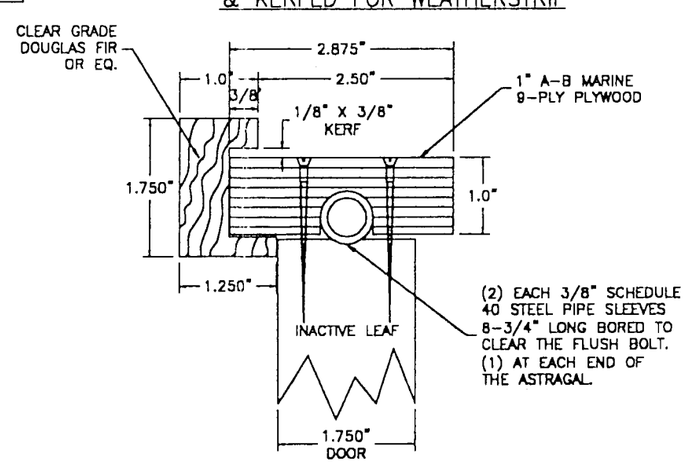

ITEM #9
J-R #100 THRESHOLD
WOOD & ALUM W/ QDS WEATHERSTRIP

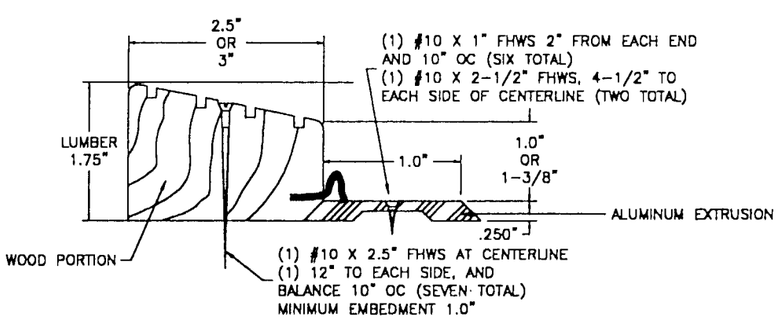

PRODUCT RENEWED
as complying with the Florida Building Code
Acceptance No. 02-0318.06
Expiration Date 04/16/07
By
Miami-Dade Product Control Division

Drawn by: E.D. & D.
Date: 12/6/99
Revisions:
Drawing #99006
Drawing Title: FBMA FRAMED BLOCK GLUED CORE WOOD DOOR
Page 1 of 2

FACE SHEETS:

7-ply construction. Face veneer sheets securely adhered to core. Combined thickness of each face panel is 1/12" min.

DOOR INFILL

Consists of 1-3/4" thick wood core blocks, any length, joints staggered, blocks glued together on all sides. If core is spliced, it must be reglued.

TYPE 1 adhesive for exterior use is required.

STILES AND RAILS

Are of solid Douglas Fir wood construction. Stiles, toprail & bottom rail are all to be 1" minimum face X 1-3/4" thick. Stiles and rails must be securely bonded to stave lumber core.

CORNER CONSTRUCTION

Butted and the ends of all intermediate frame members are coped to tightly fit the intersecting frame and attached.

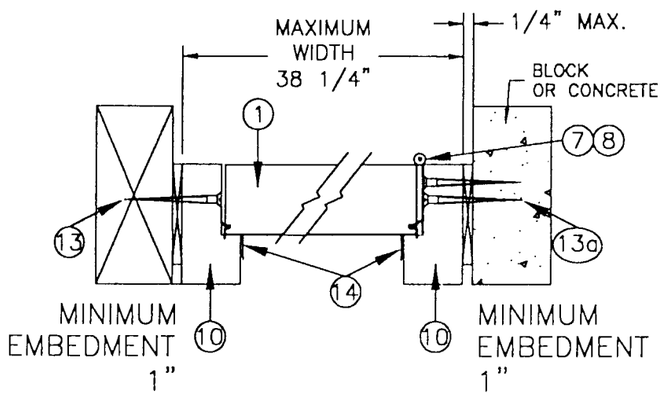

SECTION C-C

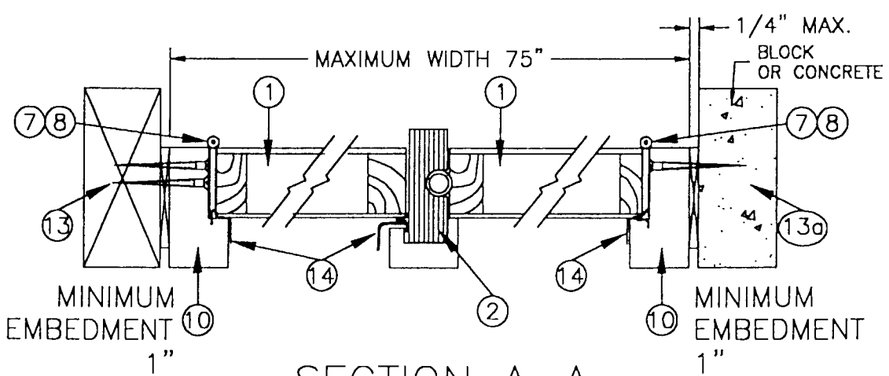

SECTION A-A

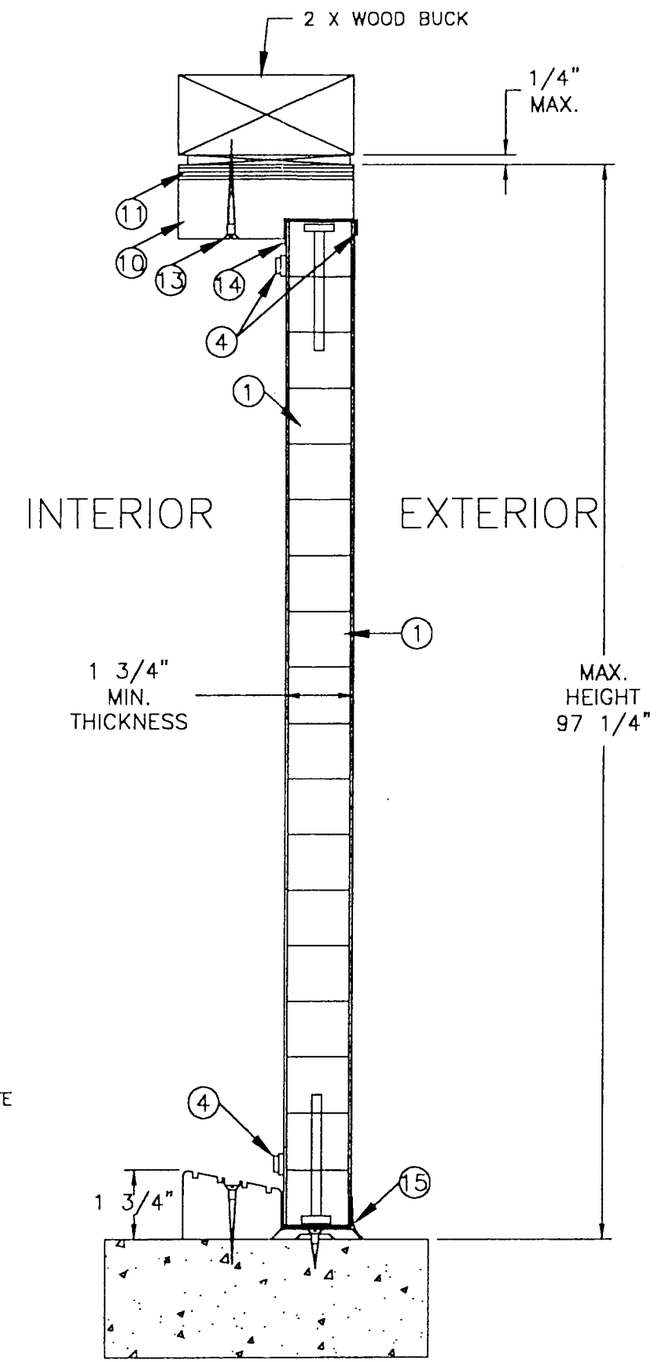

SECTION B-B

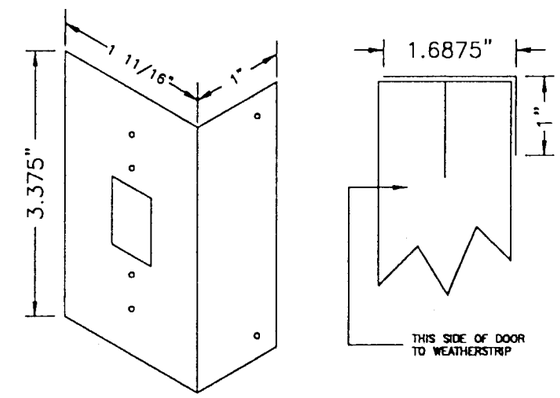

ITEM #4

LOCK REINFORCER BY M.A.G. ENG. MODIFIED

PRODUCT RENEWED
as complying with the Florida Building Code
Acceptance No. 02-0318.06
Expiration Date 04/16/07
By
Miami Dade Product Control Division

Drawn by:	E.D. & D.
Date:	12/6/99
Revisions:	
Drawing #99006	
Drawing Title:	FBMA FRAME BLOCK GLUED CORE WOOD DOOR
Page 2 of 2	