MIAMI-DADE

BUILDING CODE COMPLIANCE OFFICE (BCCO)
PRODUCT CONTROL DIVISION

MIAMI-DADE COUNTY, FLORIDA
METRO-DADE FLAGLER BUILDING
140 WEST FLAGLER STREET, SUITE 1603
MIAMI, FLORIDA 33130-1563
(305) 375-2901 FAX (305) 375-2908

NOTICE OF ACCEPTANCE (NOA)

Quality Engineered Products Co., Inc.
4506 Quality Lane P.O. Box 22213
Tampa, FL 33622

SCOPE:
This NOA is being issued under the applicable rules and regulations governing the use of construction materials. The documentation submitted has been reviewed by Miami-Dade County Product Control Division and accepted by the Board of Rules and Appeals (BORA) to be used in Miami Dade County and other areas where allowed by the Authority Having Jurisdiction (AHJ).

This NOA shall not be valid after the expiration date stated below. The Miami-Dade County Product Control Division (In Miami Dade County) and/or the AHJ (in areas other than Miami Dade County) reserve the right to have this product or material tested for quality assurance purposes. If this product or material fails to perform in the accepted manner, the manufacturer will incur the expense of such testing and the AHJ may immediately revoke, modify, or suspend the use of such product or material within their jurisdiction. BORA reserves the right to revoke this acceptance, if it is determined by Miami-Dade County Product Control Division that this product or material fails to meet the requirements of the applicable building code.

This product is approved as described herein, and has been designed to comply with the High Velocity Hurricane Zone of the Florida Building Code.

DESCRIPTION: Series "Flush" Outswing Commercial Steel Doors

APPROVAL DOCUMENT: Drawing No. Q02, titled "16Ga. Outswing Commercial Steel Door", sheets 1 through 6, prepared by manufacturer, dated 1/2/01, bearing the Miami-Dade County Product Control Renewal stamp with the Notice of Acceptance number and expiration date by the Miami-Dade County Product Control Division.

MISSILE IMPACT RATING: Large and Small Missile Impact

LABELING: Each unit shall bear a permanent label with the manufacturer's name or logo, city, state and following statement: "Miami-Dade County Product Control Approved", unless otherwise noted herein.

RENEWAL of this NOA shall be considered after a renewal application has been filed and there has been no change in the applicable building code negatively affecting the performance of this product.

TERMINATION of this NOA will occur after the expiration date or if there has been a revision or change in the materials, use, and/or manufacture of the product or process. Misuse of this NOA as an endorsement of any product, for sales, advertising or any other purposes shall automatically terminate this NOA. Failure to comply with any section of this NOA shall be cause for termination and removal of NOA.

ADVERTISEMENT: The NOA number preceded by the words Miami-Dade County, Florida, and followed by the expiration date may be displayed in advertising literature. If any portion of the NOA is displayed, then it shall be done in its entirety.

INSPECTION: A copy of this entire NOA shall be provided to the user by the manufacturer or its distributors and shall be available for inspection at the job site at the request of the Building Official.
This NOA **renews NOA # 00-0705.11** and, consists of this page 1 as well as approval document mentioned above. The submitted documentation was reviewed by **Raul Rodriguez.**

PRODUCT CONTROL ACCEPTED

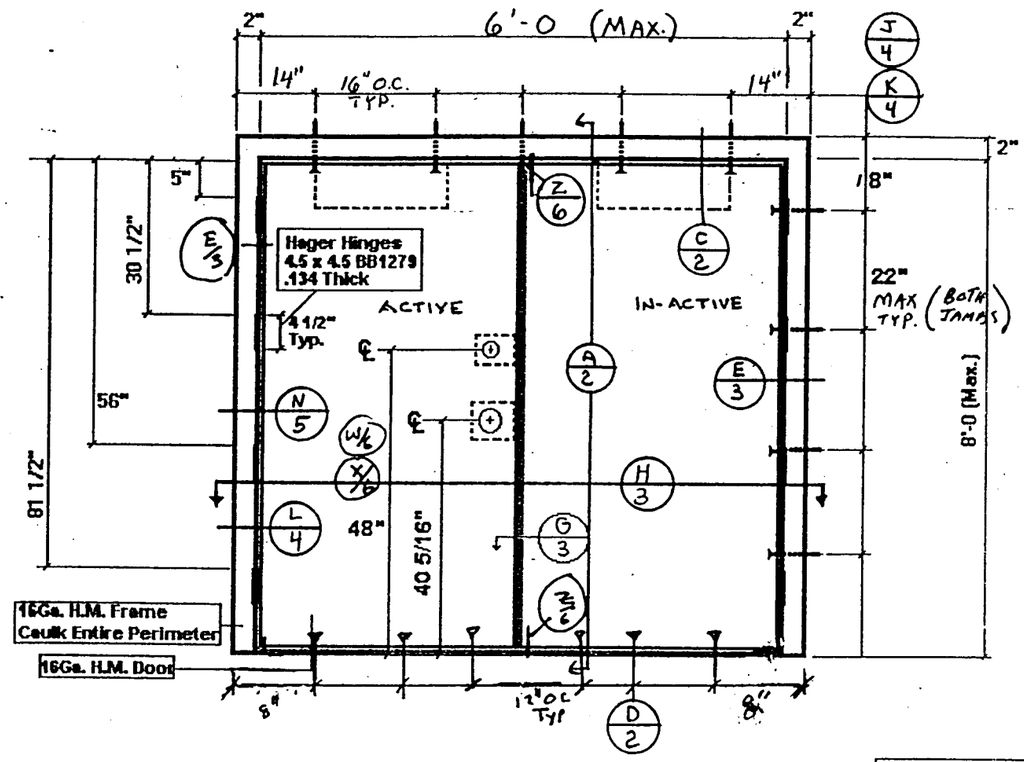

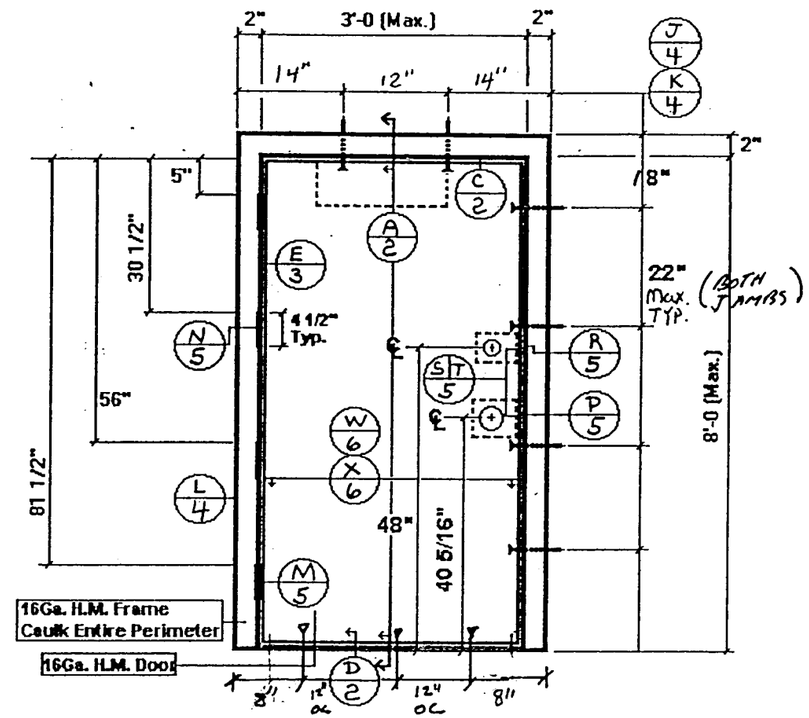

All Frames And Doors are bonderized and given one coat of Red Rust Inhibitive Primer.

LOCK FUCTIONS TESTED:			
A) S 3700 VERT ROD EXT DEV (ARROW) & H. DUTY FLUSH BOLTS		D) 2-S3700 VERT ROD EXT DEV. (ARROW)	
B) A SERIES MORT LOCK (ARROW)		E) A SERIES MORT LOCK W/ FLUSH BOLTS	
C) D SERIES MORT LOCK (ARROW)		F) D SERIES DEAD BOLT & LOCK SET W/ FLUSH BOLTS (ARROW)	

DESIGN PRESSURE RATING	
+ 65 PSF	- 44 PSF

PRODUCT RENEWED
as complying with the Florida Buiding Code
Acceptance No. 02-0327.01
Expiration Date March 28, 2007
By
Miami Dade Product Control Division

PRODUCT RENEWED
ACCEPTANCE No. 00-0705.11
EXPIRATION DATE 03-25-2002
By Ishaq I. Chanda
PRODUCT CONTROL DIVISION
BUILDING CODE COMPLIANCE OFFICE

DWG NO. Q02

16GA. OUTSWING COMMERCIAL STEEL DOOR

QUALITY ENGINEERED PRODUCTS COMPANY, INC.

JOB: REVISION #1 6-28-00 #2 1-02-01
HURRICANE TEST APPROVAL
LOCATION: METRO DADE CO.
CUSTOMER: DADE CO.

SHEET 1 OF 6

DATE: 10-20-97

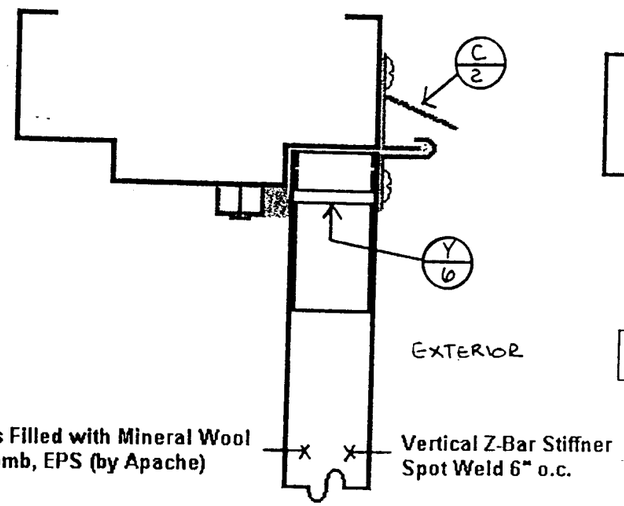

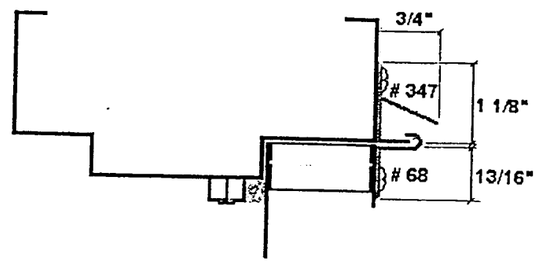

PEMKO HEAD WEATHERSTRIPING
347 AND # 68

C/2

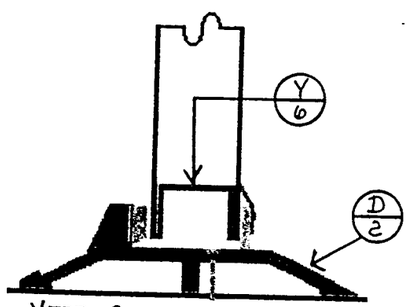

VERT. CROSS SECTION

A/2

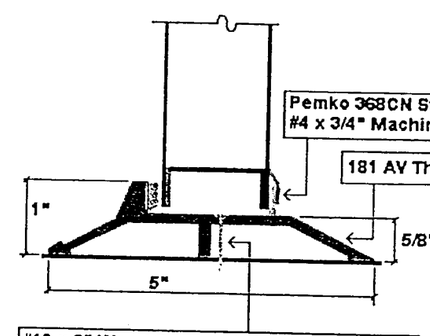

#10 x 2" Wood Screw w/ Sheild set 12" O.C.
[Embeded into wood 1.375" min.]

OR

3/16" x 2" Tapcon set 12" O.C.
[Embeded into Concrete 1¼" min.]

D/2

APPROVED WHERE WATER INFILTRATION REQUIREMENTS ARE TO BE MET.

PRODUCT RENEWED
as complying with the Florida Buiding Code
Acceptance No 02-0327.01
Expiration Date March 25, 2007
By
Miami Dade Product Control Division

PRODUCT RENEWED
ACCEPTANCE No. 00-0705.11
EXPIRATION DATE 03-25-2002
By Ishaq I. Chauda
PRODUCT CONTROL DIVISION
BUILDING CODE COMPLIANCE OFFICE

16GA. OUTSWING COMMERCIAL STEEL DOOR

DWG NO. Q02

QUALITY ENGINEERED PRODUCTS COMPANY, INC.

JOB: REVISION #1 6-28-00
#2 1-02-01
HURRICANE TEST APPROVAL

LOCATION: METRO DADE Co.

CUSTOMER: DADE Co.

SHEET 2 OF 6

DATE: 10-20-97

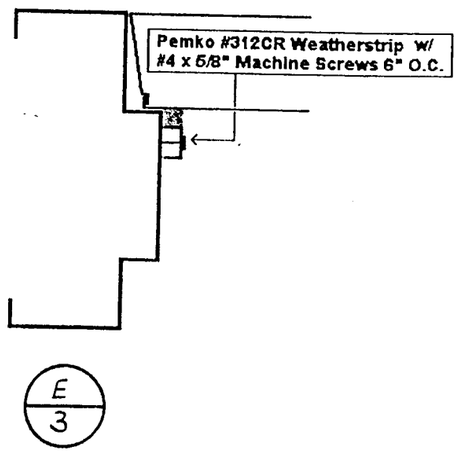

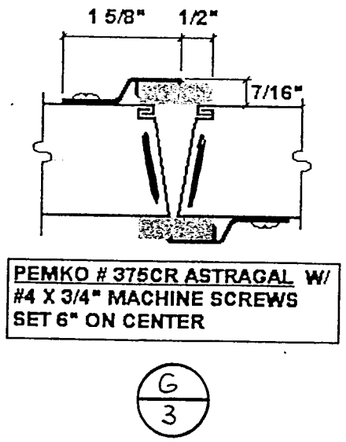

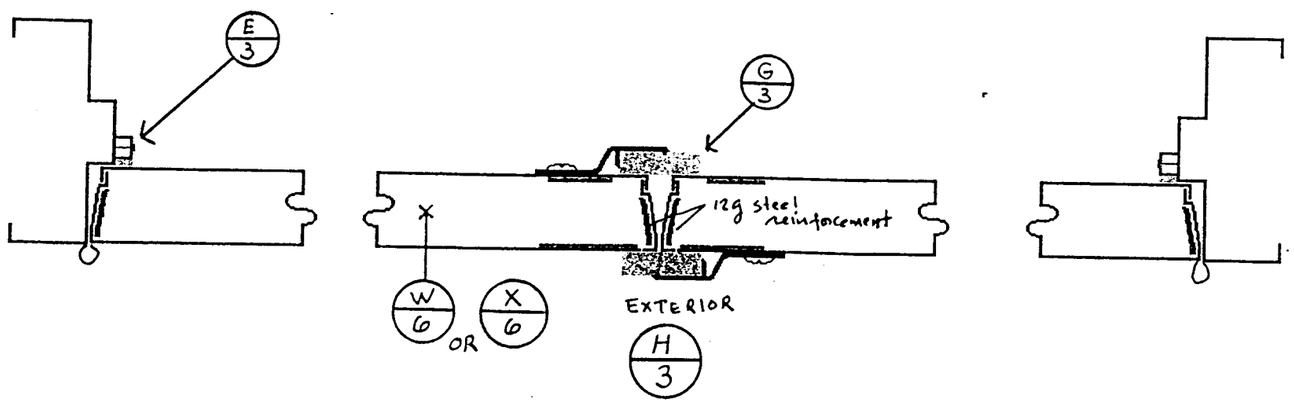

Horizontal Cross Section

*See Pages 5 and 6 for door and frame reinforcements

PRODUCT RENEWED
as complying with the Florida
Building Code
Acceptance No. 02-0327.01
Expiration Date March 25, 2007
By
Miami Dade Product Control
Division

PRODUCT RENEWED
ACCEPTANCE No. 00-0705.11
EXPIRATION DATE 03-25-2002
By Craig L. Chayde
PRODUCT CONTROL DIVISION
BUILDING CODE COMPLIANCE OFFICE

16GA. OUTSWING COMMERCIAL STEEL DOOR

DWG NO. Q02

QUALITY ENGINEERED PRODUCTS COMPANY, INC.

JOB: REVISION #1 6-28-00
#2 1-02-01
HURRICANE TEST APPROVAL

LOCATION: METRO DADE Co.

CUSTOMER: DADE Co.

SHEET 3 OF 6

DATE: 10-20-97

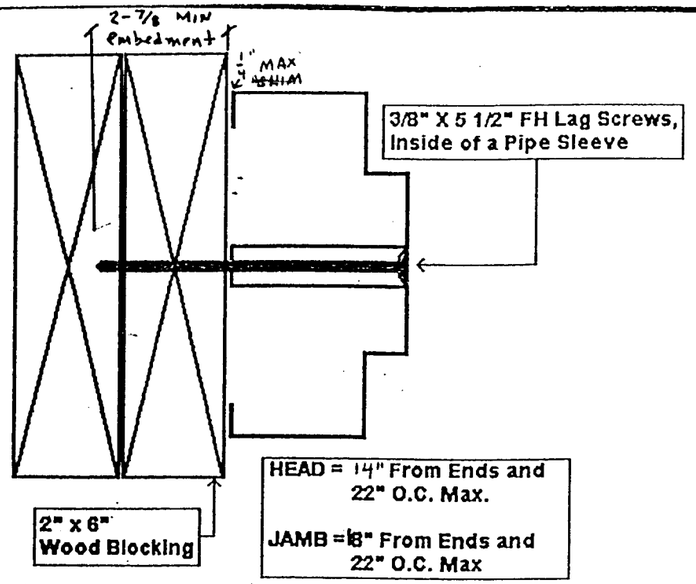

WOOD BLOCK ANCHORING

J/4

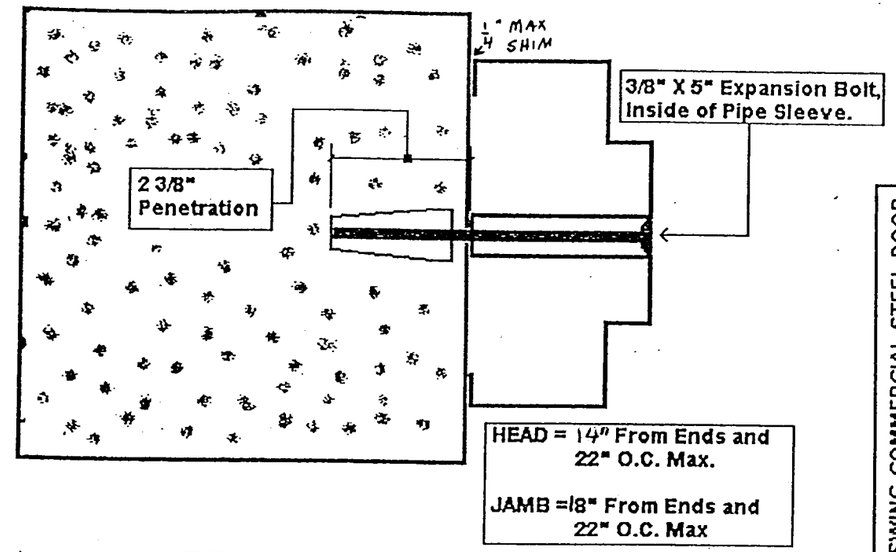

EXISTING MASONRY ANCHORING

K/4

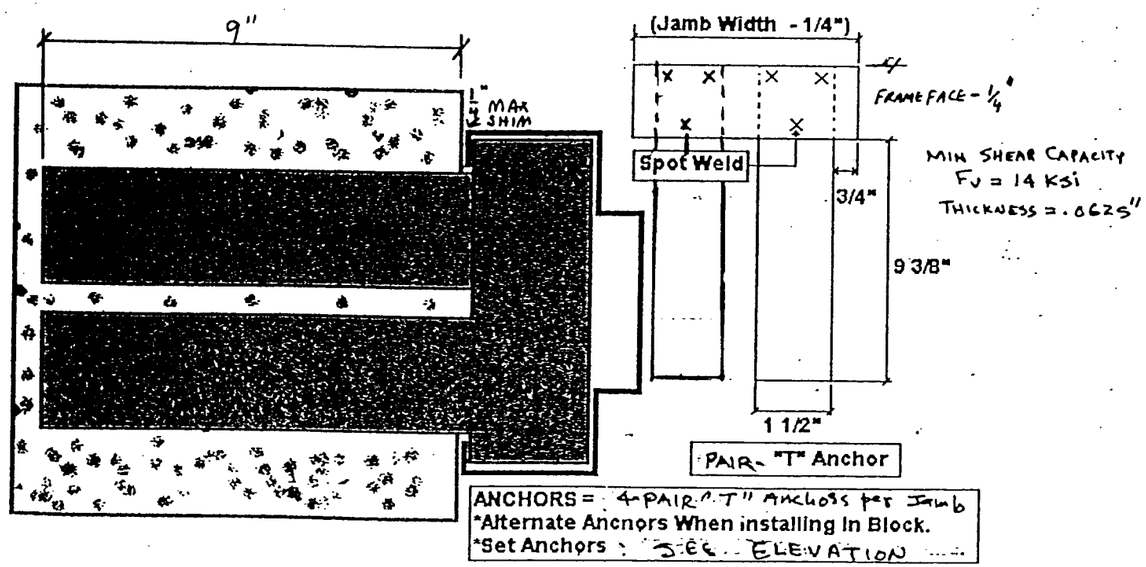

NEW MASONRY ANCHORING

L/4

PRODUCT RENEWED
as complying with the Florida Buiding Code
Acceptance No. 02-0327.01
Expiration Date March 25, 2007
By
Miami Dade Product Control Division

PRODUCT RENEWED
ACCEPTANCE No. 00-0705.11
EXPIRATION DATE 03-25-2002
By Ishag I. Chanda
PRODUCT CONTROL DIVISION
BUILDING CODE COMPLIANCE OFFICE

DWG NO. Q02

16GA. OUTSWING COMMERCIAL STEEL DOOR

QUALITY ENGINEERED PRODUCTS COMPANY, INC.

JOB: REVISION #1 6-28-00 #2 1-22-01
HURRICANE TEST APPROVAL
LOCATION: METRO DADE Co.
CUSTOMER: DADE Co.

SHEET 4 OF 6

DATE: 10-20-97

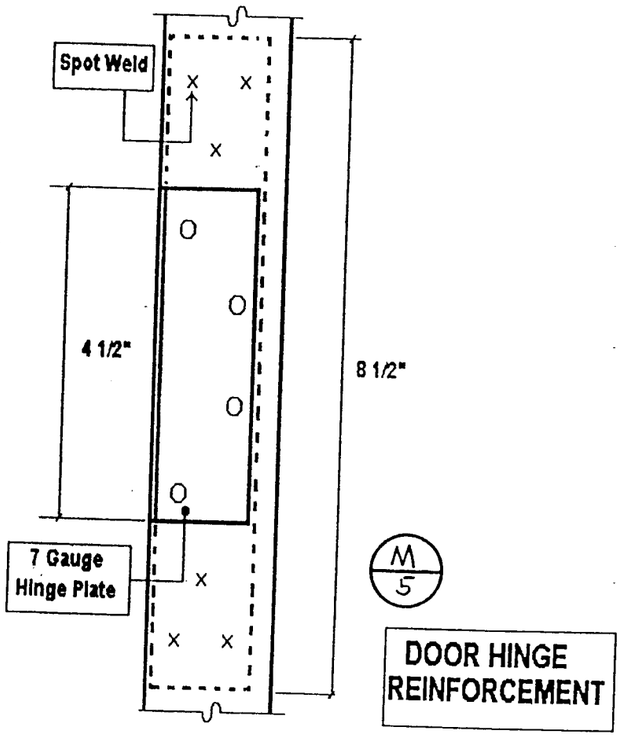

DOOR HINGE REINFORCEMENT

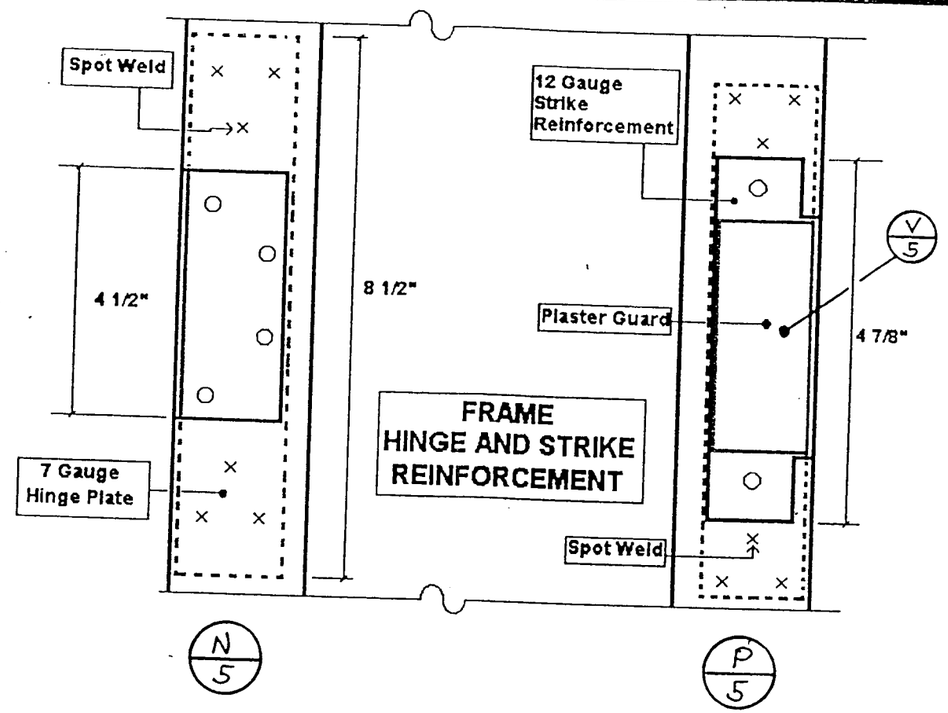

FRAME HINGE AND STRIKE REINFORCEMENT

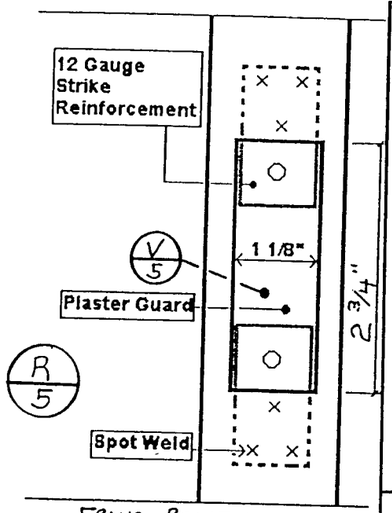

FRAME REINFORCEMENT

Deadbolt Reinforcement

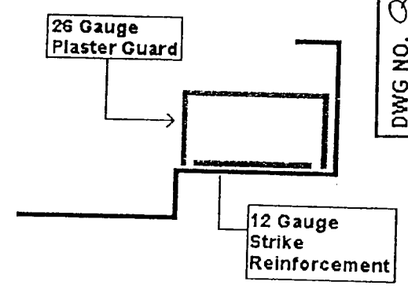

Plaster Gaurd

V
5

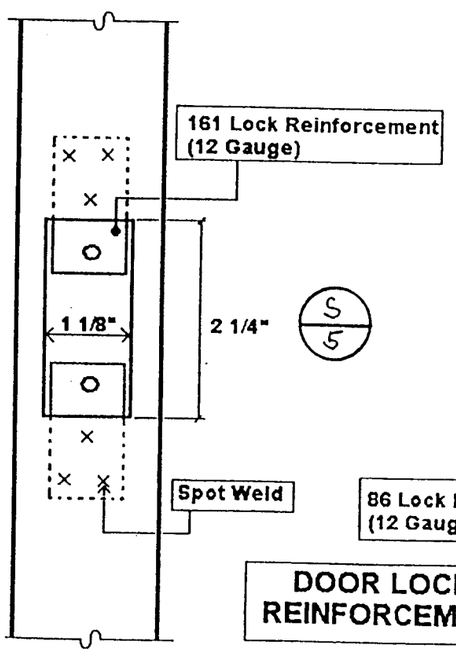

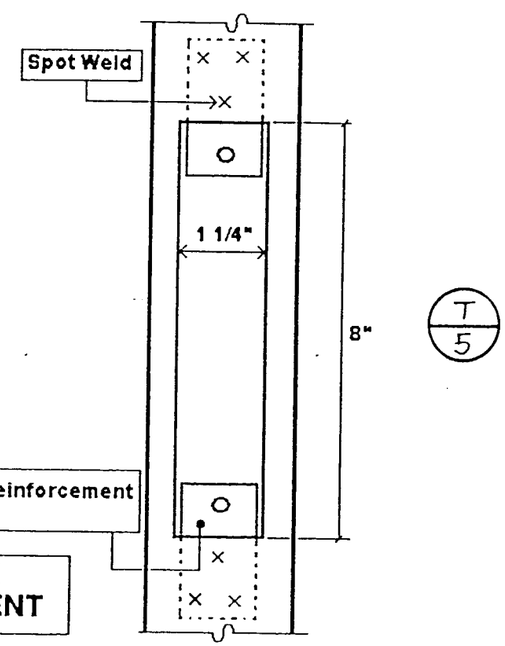

DOOR LOCK REINFORCEMENT

PRODUCT RENEWED
as complying with the Florida Building Code
Acceptance No 02-0327.01
Expiration Date March 25th 2007
By
Miami Dade Product Control Division

PRODUCT RENEWED
ACCEPTANCE No. 00-0705.11
EXPIRATION DATE 03-25-2002
By Ishaq I. Chauda
PRODUCT CONTROL DIVISION
BUILDING CODE COMPLIANCE OFFICE

16GA. OUTSWING COMMERCIAL STEEL DOOR

DWG NO. Q02

QUALITY ENGINEERED PRODUCTS COMPANY, INC.

JOB: REVISION #1 6-28-00 #2 1-02-01
HURRICANE TEST APPROVAL

LOCATION: METRO DADE Ca

CUSTOMER: DADE Co.

SHEET 5 OF 6

DATE: 10-27-97

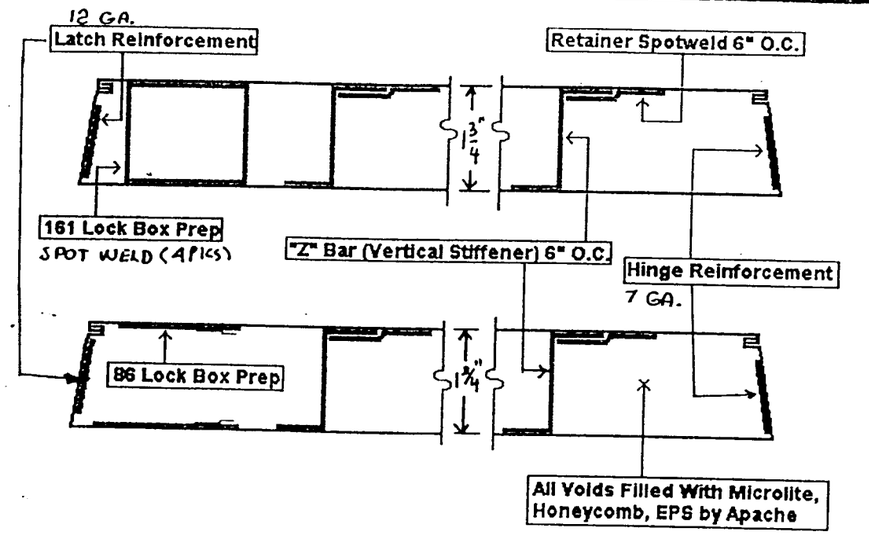

EDGE SEAM DOOR

W / 6

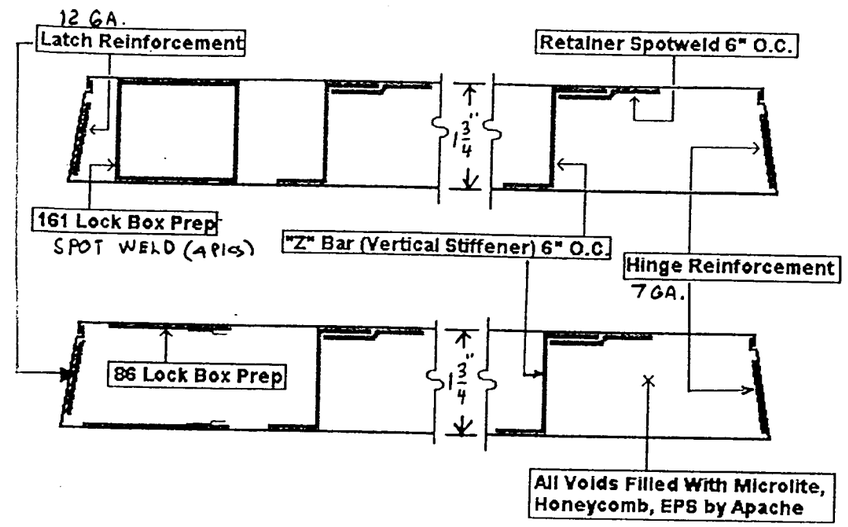

SEAMLESS EDGE DOOR

X / 6

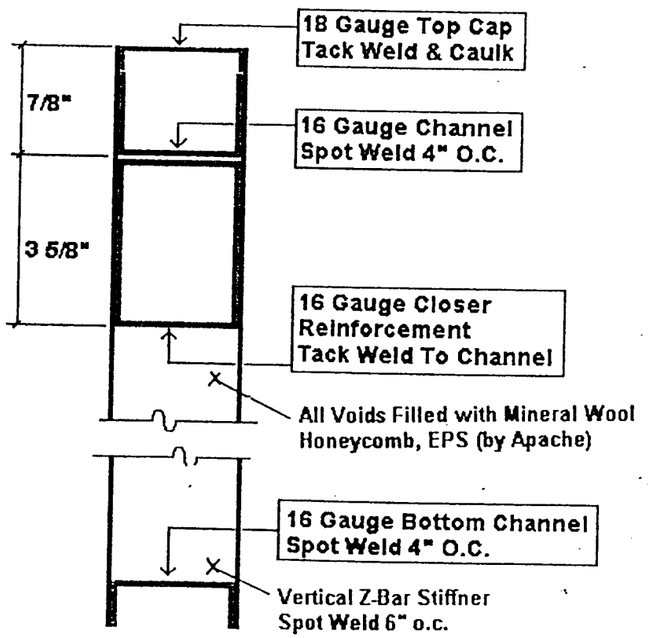

VERTICAL DOOR SECTION

Y / 6

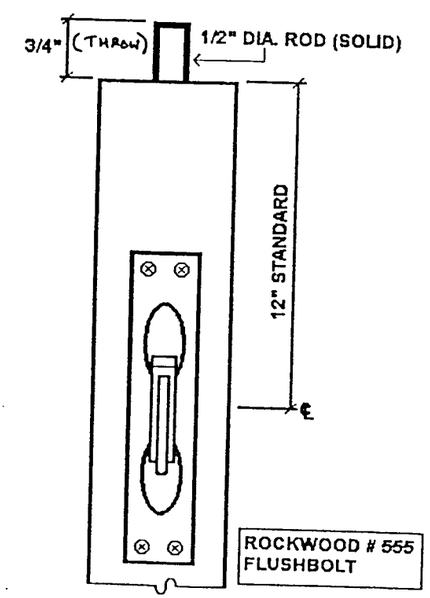

Z / 6

PRODUCT RENEWED
as complying with the Florida
Buiding Code
Acceptance No 02-0327.01
Expiration Date March 25, 2007
By
Miami Dade Product Control
Division

PRODUCT RENEWED
ACCEPTANCE No. 00-0705.11
EXPIRATION DATE 03-25-2002
By Ishaq I. Chayda
PRODUCT CONTROL DIVISION
BUILDING CODE COMPLIANCE OFFICE

16GA. OUTSWING COMMERCIAL STEEL DOOR

DWG NO. Q 02

QUALITY ENGINEERED PRODUCTS COMPANY, INC.

JOB: REVISION #1 6-28-00
#2 1-02-01
HURRICANE TEST APPROVAL

LOCATION: METRO DADE CO.

CUSTOMER: DADE CO.

SHEET 6 OF 6

DATE: 10-20-97