BUILDING CODE COMPLIANCE OFFICE (BCCO)
PRODUCT CONTROL DIVISION

MIAMI-DADE COUNTY, FLORIDA
METRO-DADE FLAGLER BUILDING
140 WEST FLAGLER STREET, SUITE 1603
MIAMI, FLORIDA 33130-1563
(305) 375-2901 FAX (305) 375-2908

NOTICE OF ACCEPTANCE (NOA)

Oldcastle Westile Inc.
1900 NW 21 st. Ave.
Ft. Lauderdale, FL 33311

SCOPE:
This NOA is being issued under the applicable rules and regulations governing the use of construction materials. The documentation submitted has been reviewed by Miami-Dade County Product Control Division and accepted by the Board of Rules and Appeals (BORA) to be used in Miami Dade County and other areas where allowed by the Authority Having Jurisdiction (AHJ).

This NOA shall not be valid after the expiration date stated below. The Miami-Dade County Product Control Division (In Miami Dade County) and/or the AHJ (in areas other than Miami Dade County) reserve the right to have this product or material tested for quality assurance purposes. If this product or material fails to perform in the accepted manner, the manufacturer will incur the expense of such testing and the AHJ may immediately revoke, modify, or suspend the use of such product or material within their jurisdiction. BORA reserves the right to revoke this acceptance, if it is determined by Miami-Dade County Product Control Division that this product or material fails to meet the requirements of the applicable building code.

This product is approved as described herein, and has been designed to comply with the High Velocity Hurricane Zone of the Florida Building Code.

DESCRIPTION: Oldcastle Westile Verona Low Profile Concrete Roof Tile

LABELING: Each unit shall bear a permanent label with the manufacturer's name or logo, city, state and following statement: "Miami-Dade County Product Control Approved", unless otherwise noted herein.

RENEWAL of this NOA shall be considered after a renewal application has been filed and there has been no change in the applicable building code negatively affecting the performance of this product.

TERMINATION of this NOA will occur after the expiration date or if there has been a revision or change in the materials, use, and/or manufacture of the product or process. Misuse of this NOA as an endorsement of any product, for sales, advertising or any other purposes shall automatically terminate this NOA. Failure to comply with any section of this NOA shall be cause for termination and removal of NOA.

ADVERTISEMENT: The NOA number preceded by the words Miami-Dade County, Florida, and followed by the expiration date may be displayed in advertising literature. If any portion of the NOA is displayed, then it shall be done in its entirety.

INSPECTION: A copy of this entire NOA shall be provided to the user by the manufacturer or its distributors and shall be available for inspection at the job site at the request of the Building Official.

This consists of pages 1 through 5.
The submitted documentation was reviewed by Frank Zuloaga, RRC

ROOFING ASSEMBLY APPROVAL:

Category: Roofing
Sub Category: Low Profile Tiles
Material: Concrete

1.SCOPE

This NOA renews a roofing system using "Oldcastle Westile Verona", as manufactured by Oldcastle Westile, Inc. Tile described in Section 2 of this Notice of Acceptance. For the locations where the pressure requirements, as determines by applicable Building Code does not exceed the design pressure values obtained by calculations in compliance with RAS 127 using the values listed in section 4 herein. The attachment calculations shall be done as a moment based system.

2. PRODUCT DESCRIPTION

Manufactured by Applicant	Dimensions	Test Specifications	Product Description
Oldcastle Westile Verona Low Profile Concrete Roof Tile	Length: 16½" Width: 13" Thickness: ½"	PA 112	Low profile, interlocking, high pressure extruded concrete roof tile equipped with one nail hole and double roll ribs. For direct deck or battened nail-on, mortar or adhesive set applications.
Trim Pieces	Length: varies Width: varies Thickness: varying	PA 112	Accessory trim, concrete roof pieces for use at hips, rakes, ridges and valley terminations. Manufactured for each tile profile.

3. LIMITATIONS

3.1 Fire classification is not part of this acceptance.
3.2 Applicant shall retain the services of a Miami-Dade County Certified Laboratory to perform quarterly tests in accordance with PA-112, appendix 'A'. Such testing shall be submitted to the Miami-Dade County Product Control Division for review.
3.3 Minimum underlayment shall be in compliance with the applicable Roofing Application Standard listed section 4.1 section.
3.4 30/90 hot mopped underlayment applications may be installed perpendicular to the roof slope unless stated otherwise by the underlayment material manufacturers published literature.
3.5 This acceptance is for wood deck applications. Minimum deck requirements shall be in compliance with applicable building code.
3.6 May be installed on slopes 7:12 and greater.

4. INSTALLATION

4.1 "Oldcastle Westile Verona Tile" and its components shall be installed in strict compliance with Roofing Application Standard RAS 118, RAS 119, and RAS 120.

4.2 Data For Attachment Calculations

Table 1: Aerodynamic Multiplyers– λ(ft^3)		
Tile Profile	**λ (ft^3) Batten Application**	**λ (ft^3) Direct Deck Application**
Verona Tile	0.27	0.29

Table 2: Restoring Moments due to Gravity - M_g (ft-lbf)										
Tile Profile	**3":12"**		**4":12"**		**5":12"**		**6":12"**		**7":12" or greater**	
	Battens	Direct Deck	Battens	Direct Deck	Battens	Direct Deck	Battens	Direct Deck	Battens	Direct Deck
Verona Tile	5.57	6.30	5.48	6.18	5.37	6.05	5.24	5.90	5.09	N/A

Table 3: Attachment Resistance Expressed as a Moment - M_f (ft-lbf) for Nail-On Systems									
Tile Profile	**Tile Application**	**Approved Nails**		**Approved Screws**		**Approved Field Clip With:**		**Approved Eave Clip With:**	
		1 nail	2 nails	1 screw	2 screws	1 nail	2 nails	1 nail	2 nails
Verona Tile	Battens	4.10	7.10	22.90	49.10	24.20	34.80	22.10	32.20
	Direct Deck	11.80	21.90	25.80	47.10	24.30	35.50	19.00	31.90

1 Data noted in Table 3 is for installation with a 3" tile headlap.

Table 3-A: Attachment Resistance Expressed as a Moment - M_f (ft-lbf) For Nail-On Systems		
Tile Profile	**Tile Application**	**Two (2) 10d x 3" long nails**
Verona Tile	Direct Deck New Construction (min. $^{19}/_{32}$" plywood)	67.50
	Direct Deck Recover/Reroof (min. $^{15}/_{32}$" plywood)	43.00
	Battens New Construction	50.90

1 Tile installation with a 4" headlap using two (2) Approved 10d x 3" long polymer coated, corrosion resistant, ring shank nails installed in manufactured holes located 2½" from the head of the tile. Clips on eave tile are not required for this attachment configuration unless the Required Moment of Resistance exceeds the values noted above.

Table 4: Attachment Resistance Expressed as a Moment - M_f (ft-lbf) for Mortar or Adhesive Set Systems		
Tile Profile	**Tile Application**	**Attachment Resistance**
Verona Tile	Mortar Set	20.60
	Adhesive Set	86.61

5.LABELING

All tiles shall bear the imprint or identifiable marking of the manufacturer's name, logo, or following statement: "Miami-Dade County Product Control Approved".

6. BUILDING PERMIT REQUIREMENTS

6.1 Application for building permit shall be accompanied by copies of the following:

6.1.1 This Notice of Acceptance.

6.1.2 Any other documents required by the Building Official or applicable building code in order to properly evaluate the installation of this system.

PROFILE DRAWING

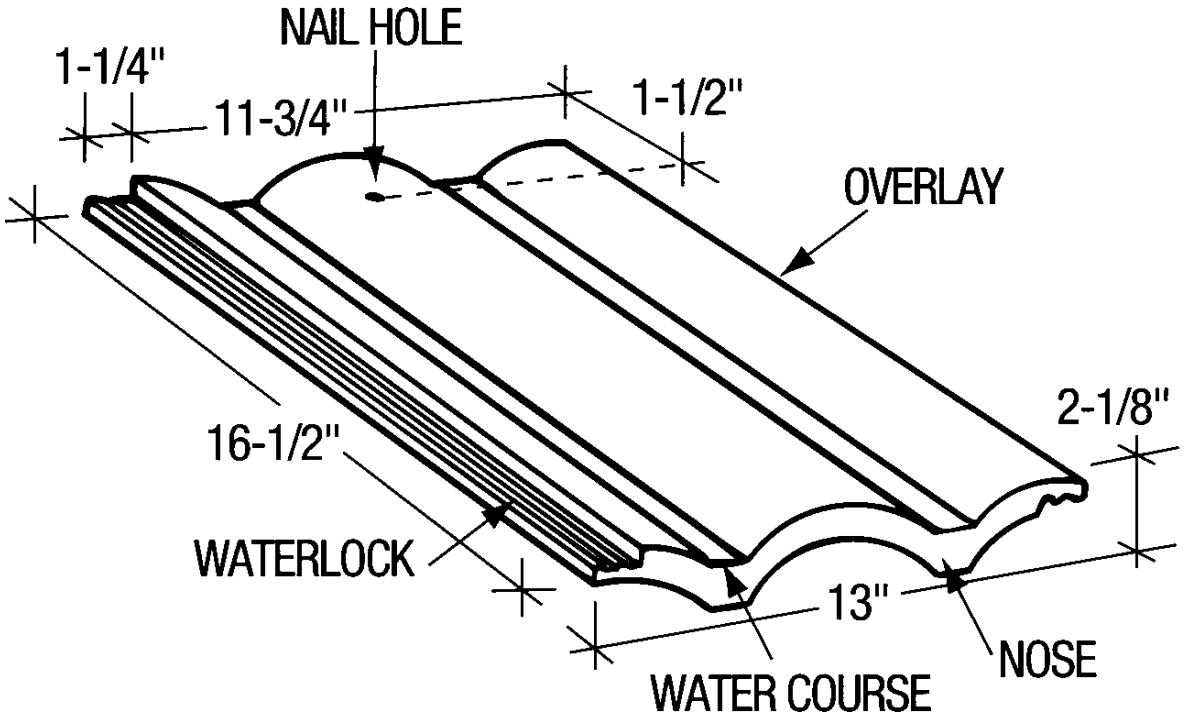

VERONA TILE

END OF THIS ACCEPTANCE

A. TESTS:

Test Agency	Test Identifier	Test Name/Report	Date
Redland Technologies	7161-03 Appendix III	Static Uplift Testing PA 102	Dec. 1991
Redland Technologies	7161-03 Appendix III	Static Uplift Testing PA 102(A)	Dec. 1991
The Center for Applied Engineering, Inc.	94-084	Static Uplift Testing PA 101 (Mortar Set)	May 1994
The Center for Applied Engineering, Inc.	94-060B	Static Uplift Testing PA 101 (Adhesive Set)	March, 1994
The Center for Applied Engineering, Inc.	25-7094-1	Static Uplift Testing PA 102 (4" Headlap, Nails, Direct Deck, New Construction)	Oct. 1994
The Center for Applied Engineering, Inc.	25-7094-7	Static Uplift Testing PA 102 (4" Headlap, Nails, Battens)	Oct. 1994
The Center for Applied Engineering, Inc.	25-7094-4	Static Uplift Testing PA 102 (4" Headlap, Nails, Direct Deck, Recover/Reroof)	Oct. 1994
The Center for Applied Engineering, Inc.	25-7183-1	Static Uplift Testing PA 102 (2 Quik-Drive Screws, Direct Deck)	Feb. 1995
The Center for Applied Engineering, Inc.	25-7183-2	Static Uplift Testing PA 102 (2 Quik-Drive Screws, Battens)	Feb. 1995
The Center for Applied Engineering, Inc.	25-7214-2	Static Uplift Testing PA 102 (1 Quik-Drive Screw, Direct Deck)	March, 1995
The Center for Applied Engineering, Inc.	25-7214-6	Static Uplift Testing PA 102 (1 Quik-Drive Screw, Battens)	March, 1995
Redland Technologies	7161-03 Appendix II	Wind Tunnel Testing PA 108 (Nail-On)	Dec. 1991
Redland Technologies	Letter Dated Aug. 1, 1994	Wind Tunnel Testing PA 108 (Nail-On)	Aug. 1994
Redland Technologies	P0631-01	Wind Tunnel Testing PA 108 (Mortar Set)	July 1994
Redland Technologies	P0402	Withdrawal Resistance Testing of screw vs. smooth shank nails	Sept. 1993
The Center for Applied Engineering, Inc.	Project No. 307025 Test #MDC-77	Wind Driven Rain PA 100	Oct. 1994
Professional Service Industries, Inc.	383-97044	Physical Properties PA 112	May 1999

B. OTHER

1. NTRMA Association Member
2. Notice of Acceptance number 99-0603.02