MIAMI-DADE

BUILDING CODE COMPLIANCE OFFICE (BCCO)
PRODUCT CONTROL DIVISION

**MIAMI-DADE** COUNTY, FLORIDA
METRO-DADE FLAGLER BUILDING
**140 WEST FLAGLER STREET, SUITE 1603**
MIAMI, FLORIDA 33130-1563
(305) 375-2901 FAX (305) 375-2908

# NOTICE OF ACCEPTANCE (NOA)

**Eagle Window & Door, Inc.**
**375 East Ninth Street P. O. Box 1072**
**Dubuque, IA 52004-1072**

**SCOPE:**
This NOA is being issued under the applicable rules and regulations governing the use of construction materials. The documentation submitted has been reviewed by Miami-Dade County Product Control Division and accepted by the Board of Rules and Appeals (BORA) to be used in Miami Dade County and other areas where allowed by the Authority Having Jurisdiction (AHJ).

This NOA shall not be valid after the expiration date stated below. The Miami-Dade County Product Control Division (In Miami Dade County) and/or the AHJ (in areas other than Miami Dade County) reserve the right to have this product or material tested for quality assurance purposes. If this product or material fails to perform in the accepted manner, the manufacturer will incur the expense of such testing and the AHJ may immediately revoke, modify, or suspend the use of such product or material within their jurisdiction. BORA reserves the right to revoke this acceptance, if it is determined by Miami-Dade County Product Control Division that this product or material fails to meet the requirements of the applicable building code.

This product is approved as described herein, and has been designed to comply with the High Velocity Hurricane Zone of the Florida Building Code.

**DESCRIPTION: Aluminum Clad Outswing Glazed Wood French Door with Sidelites – Impact Resistant**

**APPROVAL DOCUMENT:** Drawing No. **S-9957,** dated 07/27/00, with revision 2 dated 02/01/02, titled "Eagle Aluminum Clad Out-Swing Glazed 8-0 Max. French Door", sheets 1 through 7, prepared by R. W. Building Consultants, Inc., bearing the Miami-Dade County Product Control Approval stamp with the Notice of Acceptance number and approval date by the Miami-Dade County Product Control Division.

**MISSILE IMPACT RATING: Large and Small Missile Impact Resistant**

**LABELING:** Each unit shall bear a permanent label with the manufacturer's name or logo, city, state and following statement: "Miami-Dade County Product Control Approved", unless otherwise noted herein.

**RENEWAL** of this NOA shall be considered after a renewal application has been filed and there has been no change in the applicable building code negatively affecting the performance of this product.

**TERMINATION** of this NOA will occur after the expiration date or if there has been a revision or change in the materials, use, and/or manufacture of the product or process. Misuse of this NOA as an endorsement of any product, for sales, advertising or any other purposes shall automatically terminate this NOA. Failure to comply with any section of this NOA shall be cause for termination and removal of NOA.

**ADVERTISEMENT:** The NOA number preceded by the words Miami-Dade County, Florida, and followed by the expiration date may be displayed in advertising literature. If any portion of the NOA is displayed, then it shall be done in its entirety.

**INSPECTION:** A copy of this entire NOA shall be provided to the user by the manufacturer or its distributors and shall be available for inspection at the job site at the request of the Building Official.
This NOA **revises NOA # 99-0913.04** and consists of this page 1 as well as approval document mentioned above.
The submitted documentation was reviewed by **Manuel Perez, P.E.**

PRODUCT CONTROL ACCEPTED

# EAGLE WINDOW & DOOR, INC.

**EAGLE 8-0 MAX. OUTSWING FRENCH DOOR**

**ALUMINUM CLAD GLAZED DOORS & FRAMES**

## GENERAL NOTES

1. THIS PRODUCT IS DESIGNED TO MEET THE SOUTH FLORIDA BUILDING CODE 1994 EDITION FOR MIAMI–DADE COUNTY.
2. WOOD BUCKS BY OTHERS, MUST BE ANCHORED PROPERLY TO TRANSFER LOADS TO THE STRUCTURE.
3. PRODUCT ANCHORS SHALL BE AS LISTED AS SPACED AS SHOWN ON DETAILS. ANCHOR EMBEDMENT TO BASE MATERIAL SHALL BE BEYOND WALL FINISH OR STUCCO.
4. IMPACT RESISTANT SHUTTERS NOT REQUIRED.
5. DESIGN PRESSURE RATING SHALL BE AS FOLLOW:
   – FOR UP TO 12'0 X 8'0 FRENCH OUTSWING GLASS DOOR SEE TABLE 1.
6. ALL DIMENSIONS ARE GIVEN IN INCHES UNLESS OTHERWISE SHOWN.

## PRODUCT DESCRIPTION

FRAME CONSTRUCTION:

1. LAMINATED VENEERED LUMBER CLEAR PINE VENEER. EXTERIOR SURFACE CLAD WITH ALUMINUM. THE CORNER ARE CONNECTED USING A CORNER KEY & SECURED WITH (2) #6 x 3/8" PFH MS AT EACH CORNER.

GLAZED PANEL CONSTRUCTION:

1. SELECT SOFT WOOD, FINGER JOINTED WITH CLEAR PINE VENEER. EXTERIOR SURFACES CLAD WITH ALUMINUM. THE CORNERS ARE CONNECTED USING A SASH CORNER KEY & SECURED WITH A #7 x 1.25" PFHWS AT EACH CORNER. THE GLASS IS CAPTURED BETWEEN THE ALUM. CLADDING GLASS STOP ON THE EXTERIOR & THE WOOD GLASS STOP ON THE INTERIOR. THE WOOD GLASS STOP IS SECURED USING 1 1/2" L. BRAD TRIM NAILS.

## TABLE OF CONTENTS


| SHEET # | DESCRIPTION |
|---|---|
| 1 | GENERAL NOTES & ELEVATIONS |
| 2 | VERTICAL CROSS SECTIONS & B.O.M. |
| 3 | HORIZONTAL CROSS SECTIONS |
| 4 | HORIZONTAL CROSS SECTIONS & GLAZING DETAILS |
| 5 | ANCHORING LOCATIONS & DETAILS |
| 6 | ANCHORING LOCATIONS |
| 7 | UNIT COMPONENTS |


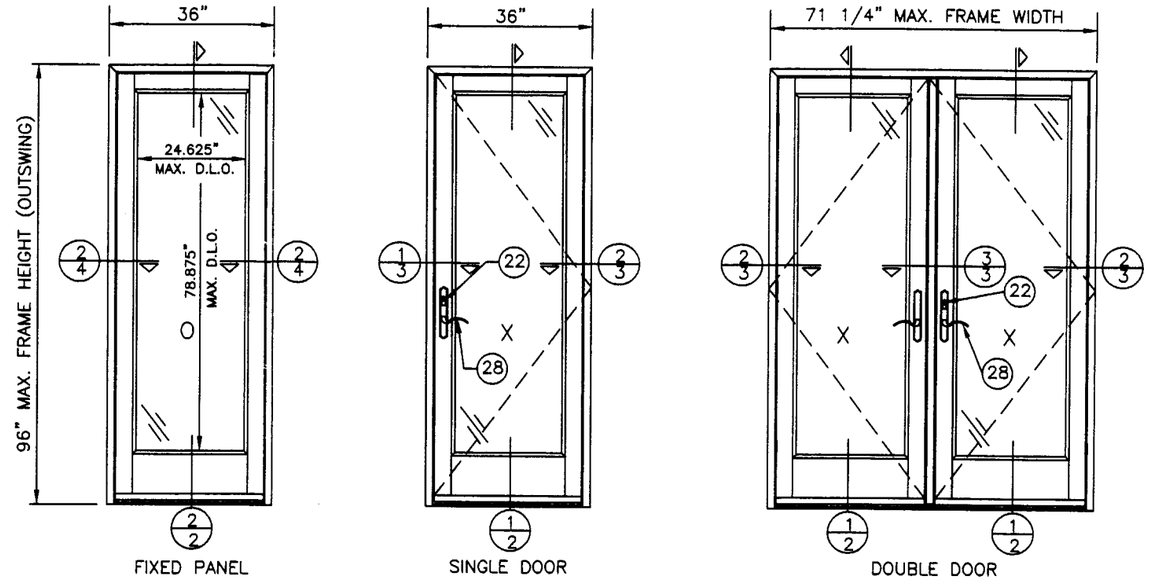


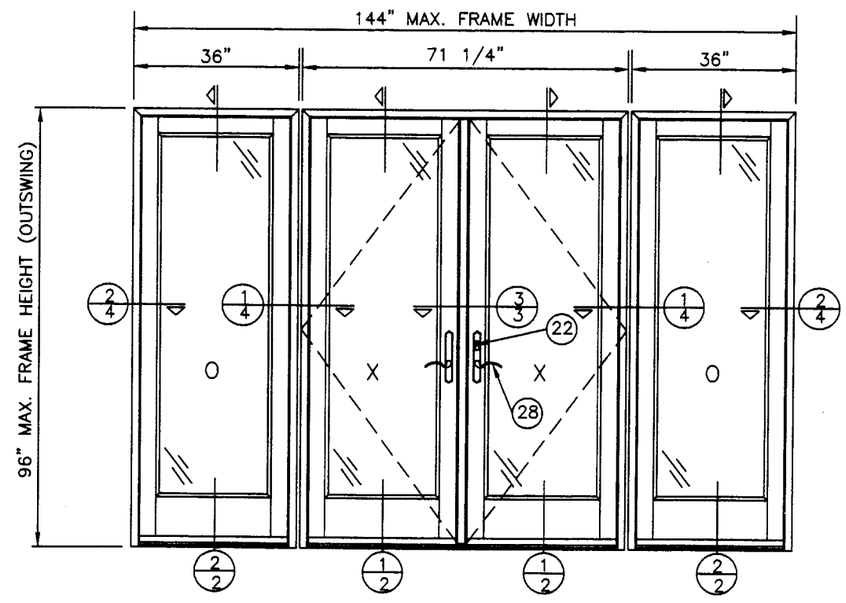


COMBINATION MAXIMUM FOUR PANELS
(PANELS MAY BE ANY COMBINATION OF ACTIVE OR INACTIVE)
ALL ELEVATIONS ARE VIEWED FROM EXTERIOR

DESIGN PRESSURE RATING
WHERE WATER INFILTRATION IS REQUIRED

| UNIT TYPE | SEASTORM TYPE "B" WITH PET TAIL | SEASTORM TYPE "B" WITHOUT P.E.T. TAIL |
|---|---|---|
| SINGLE | + 60.0 PSF – 65.0 PSF | + 70.0 PSF – 75.0 PSF |
| DOUBLE | + 60.0 PSF – 65.0 PSF | + 60.0 PSF – 65.0 PSF |
| SINGLE & DOUBLE WITH SIDELITES | + 60.0 PSF – 65.0 PSF | + 60.0 PSF – 65.0 PSF |

Approved as complying with the Florida Buiding Code
Date MAY 30, 2002
NOA# 02-0328.10
Miami Dade Product Control Division
By Manuel Perez


EAGLE WINDOW & DOOR, INC.
375 EAST 9th St.
DUBUQUE,, IA 52004–1072
PH. 319.556.4408


PRODUCT: EAGLE ALUMINUM CLAD OUT–SWING GLAZED 8–0 MAX. FRENCH DOOR

PART OR ASSEMBLY: GENERAL NOTES AND ELEVATIONS

REVISIONS

| NO. | DATE | | BY |
|---|---|---|---|
| 2 | 2/1/02 | GLAZING DET/DES PRESSURE | RW |
| 1 | 9/19/00 | GENERAL REVISION | TJH |


RW BUILDING CONSULTANTS, INC.
813.684.3831


DATE: 7/27/00
SCALE: N.T.S.
DWG. BY: TJH
CHK. BY: RW
DRAWING NO.: S–9957
SHEET 1 OF 7

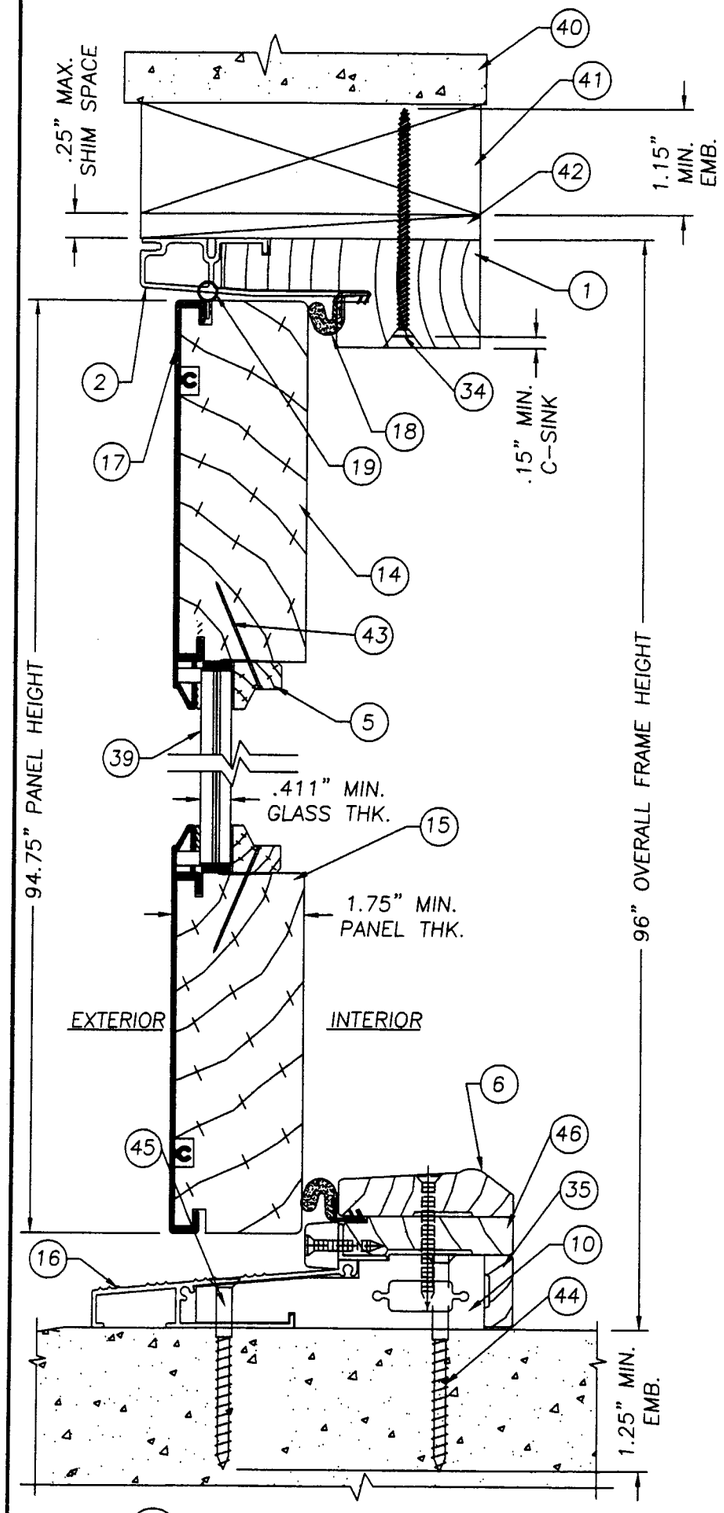


1/2 VERTICAL CROSS SECTION

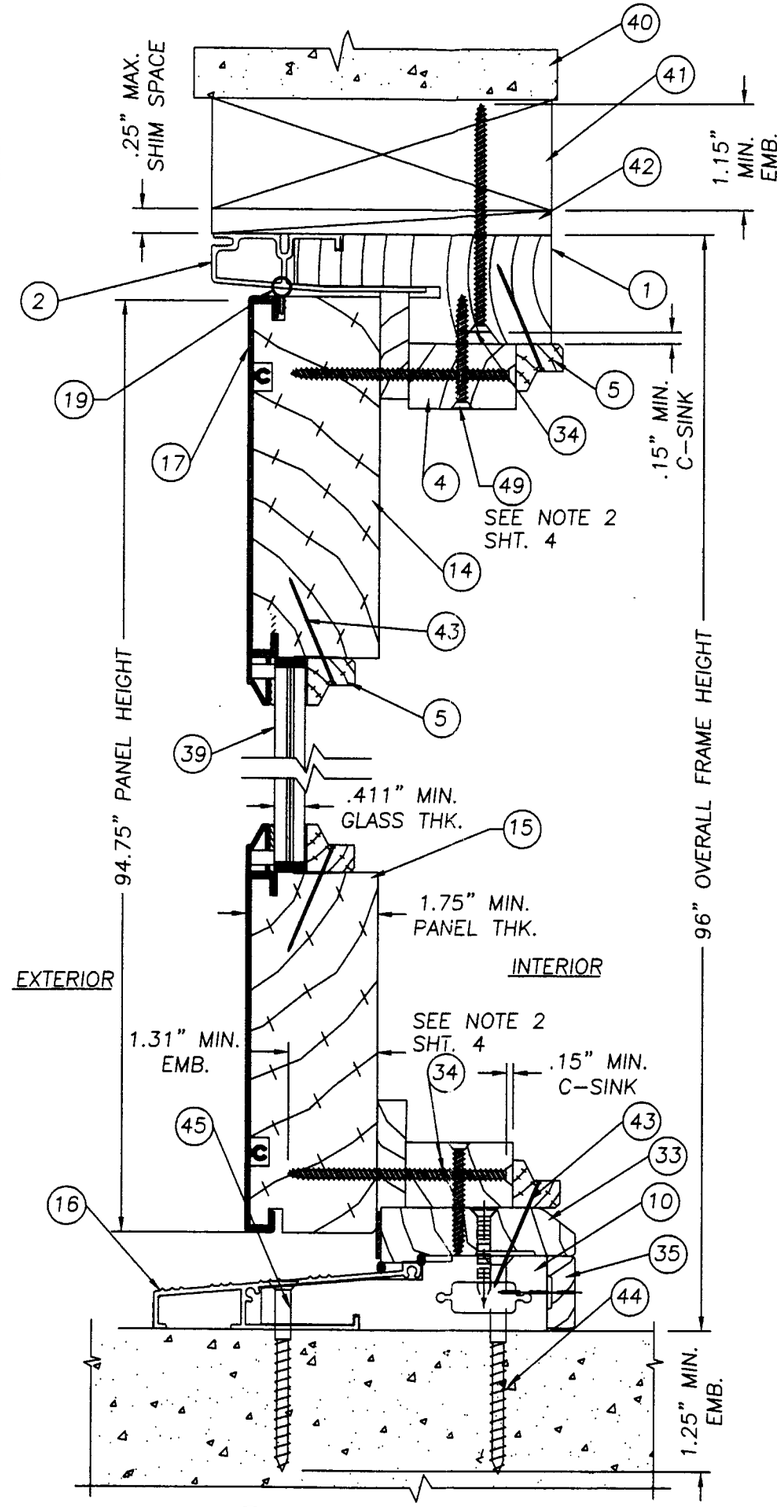


2/2 VERTICAL CROSS SECTION

| ITEM # | DESCRIPTION | MATERIAL |
|---|---|---|
| 1 | Frame Member | WOOD |
| 2 | Frame Cover Extruded 6063-T6 | ALUM. |
| 3 | Glazing Bead VINYL SPACER | VINYL |
| 4 | Frame Stop .875" x 1.4375" | WOOD |
| 5 | Glass Stop (SEE SHT. 7 OF 7) | WOOD |
| 6 | OutswingThreshold Bumper Cap (SEE SHT. 7 OF 7) | WOOD |
| 7 | NOT USED | |
| 8 | Panel Filler Cover | |
| 9 | Panel Filler | |
| 10 | Inner Sill | WOOD |
| 11 | Out-Swing Astragal | WOOD |
| 12 | Astragal Cover Extruded Alum. 6063-T6 | ALUM. |
| 13 | Stile 4.749" L. x 1.686" Thk. | WOOD |
| 14 | Top Rail 4.479" W. x 1.686" Thk. | WOOD |
| 15 | Bottom Rail 9.875" W. x 1.686" Thk. | WOOD |
| 16 | Sill Extruded Alum. 6063-T6 | ALUM. |
| 17 | Panel Cladding Extruded Alum. 6063-T6 | ALUM. |
| 18 | Frame Weatherstrip ((A18G.01)) | FOAM |
| 19 | Panel Weatherstrip (A25Y.01) | FOAM |
| 20 | Flush Bolt @ Top & Bottom .394" Dia. | STEEL |
| 21 | Cornerlock | PVC |
| 22 | 3-Point Locking System/Deadbolt | STEEL |
| 23 | Strike Plate (Head See sht. 7 of 7) | STEEL |
| 24 | Strike Plate (Jamb See sht. 7 of 7) | STEEL |
| 25 | Strike Plate (Sill See sht. 7 of 7) | STEEL |
| 26 | Door Hinge (See sht. 7 of 7) | STEEL |
| 27 | NOT USED | |
| 28 | French Door Handle | |
| 29 | NOT USED | |
| 30 | NOT USED | |
| 31 | NOT USED | |
| 32 | #6 x 2" FH Screw | STEEL |
| 33 | Sidelite Sill Stop | WOOD |
| 34 | #8 x 3" FH Screw | STEEL |
| 35 | Sill Trim | WOOD |
| 36 | #8 x 2" Phillips FH Screw note 2 sht. 4 | STEEL |
| 37 | Silicone Sealant (Dow 995) | SILICONE |
| 38 | NOT USED | |
| 39 | Laminated Glass .411" THK. (SEA STORM TYP. "B" BY CARDINAL, WITH & WITHOUT TAIL) | |
| 40 | Masonry | |
| 41 | 2X Wood Buck | |
| 42 | 1/4" Shim Material | |
| 43 | 1 1/2" L. Brad Trim Nail 16Ga. Note 3 sht. 4 | STEEL |
| 44 | 1/4" x 3" L. Tapcon | STEEL |
| 45 | 1/4" x 2 1/2" L. Tapcon | STEEL |
| 46 | Sill Cap | WOOD |
| 47 | Ives Heavy Duty Surface Bolt #454-5 1/4" x 3/4" Rod @ Top & Bottom | STEEL |
| 48 | #8 x 1 1/4" Type "A" Phillips FH Screw | STEEL |
| 49 | #8 x 1 1/2" Phillips FH Screw | STEEL |


**EAGLE WINDOW & DOOR, INC.**
375 EAST 9th St.
DUBUQUE,, IA 52004-1072
PH. 319.556.4408


PRODUCT: EAGLE ALUMINUM CLAD OUT-SWING GLAZED 8-0 MAX. FRENCH DOOR

PART OR ASSEMBLY: VERTICAL CROSS SECTIONS & BILL OF MATERIALS

REVISIONS

| NO. | DATE | | BY |
|---|---|---|---|
| 2 | 2/1/02 | GLAZING DET/DES PRESSURE | RW |
| 1 | 9/19/00 | GENERAL REVISION | TJH |


RW BUILDING CONSULTANTS, INC.
813.684.3831


Approved as complying with the Florida Building Code
Date MAY 30, 2002
NOA# 02-0328.10
Miami Dade Product Control Division
By Manuel Perez

DATE: 7/27/00
SCALE: N.T.S.
DWG. BY: TJH
CHK. BY: RW
DRAWING NO.: S-9957
SHEET 2 OF 7

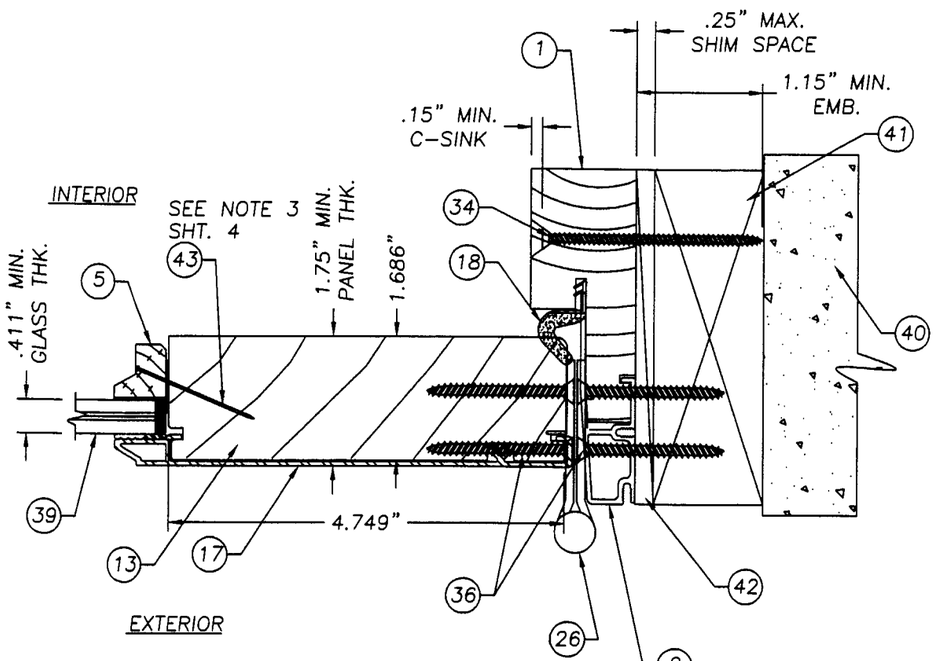


2/3 HORIZONTAL CROSS SECTION
HINGE JAMB TO BUCK

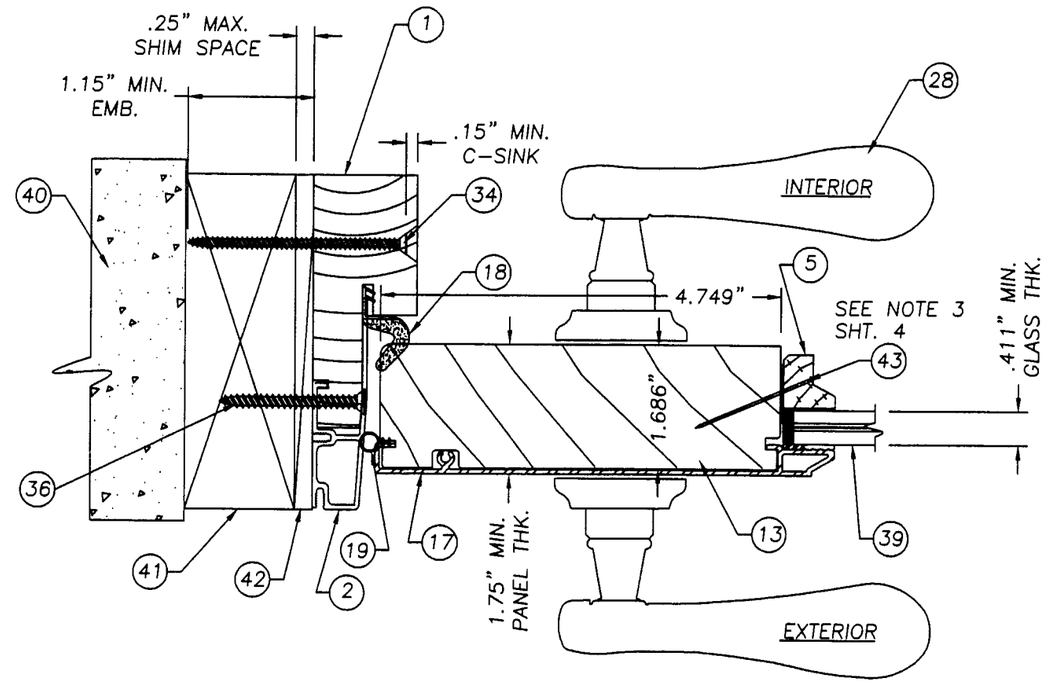


1/3 HORIZONTAL CROSS SECTION
LATCH JAMB TO BUCK

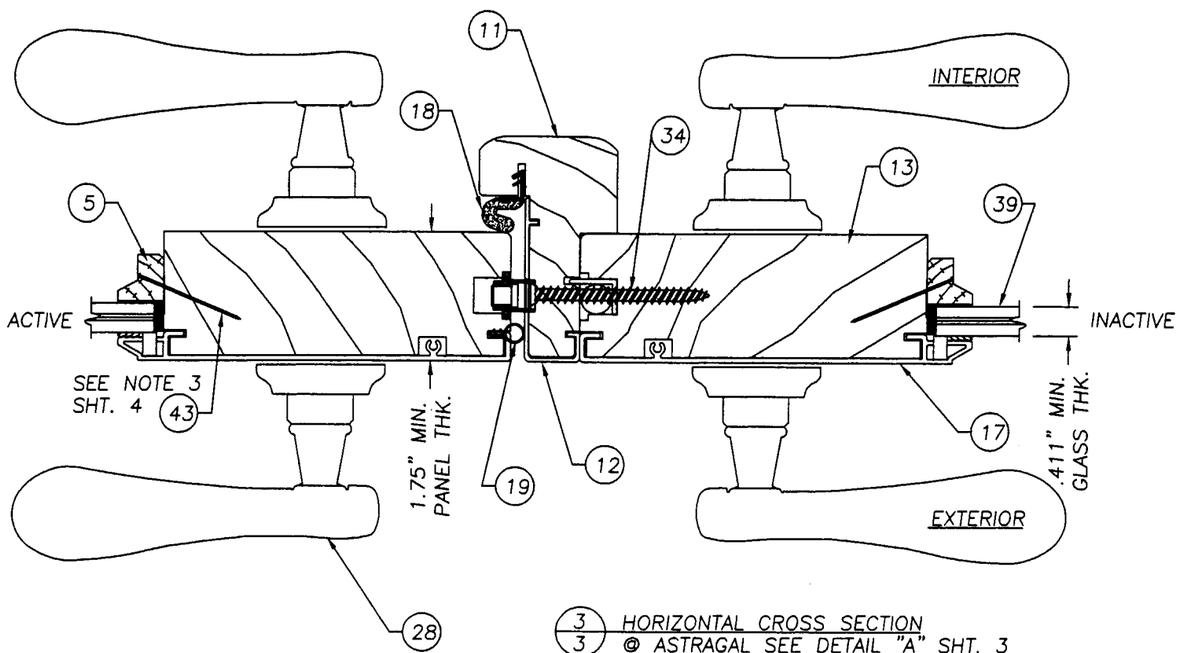


3/3 HORIZONTAL CROSS SECTION
@ ASTRAGAL SEE DETAIL "A" SHT. 3
FOR SURFACE BOLT VIEW

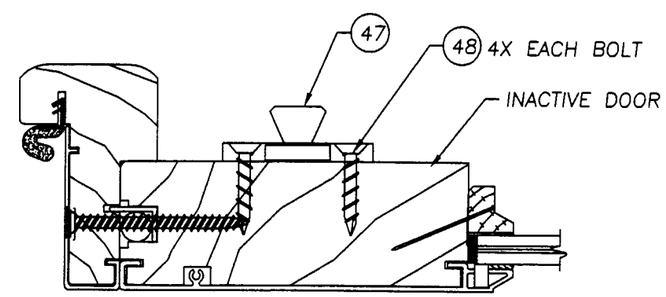


DETAIL "A" SURFACE BOLT VIEW
SEE NOTE 4 SHT. 4

Approved as complying with the Florida Buiding Code
Date MAY 30, 2002
NOA# 02-0328.10
Miami Dade Product Control Division
By Manuel Sorz


EAGLE WINDOW & DOOR, INC.
375 EAST 9th St.
DUBUQUE, IA 52004-1072
PH. 319.556.4408


PRODUCT: EAGLE ALUMINUM CLAD OUT-SWING GLAZED 8-0 MAX. FRENCH DOOR

PART OR ASSEMBLY: HORIZONTAL CROSS SECTIONS

| NO. | DATE | REVISIONS | BY |
|---|---|---|---|
| 2 | 2/1/02 | GLAZING DET/DES PRESSURE | RW |
| 1 | 9/19/00 | GENERAL REVISION | TJH |


RW BUILDING CONSULTANTS, INC.
813.684.3831


DATE: 7/27/00
SCALE: N.T.S.
DWG. BY: TJH
CHK. BY: RW
DRAWING NO.: S-9957
SHEET 3 OF 7

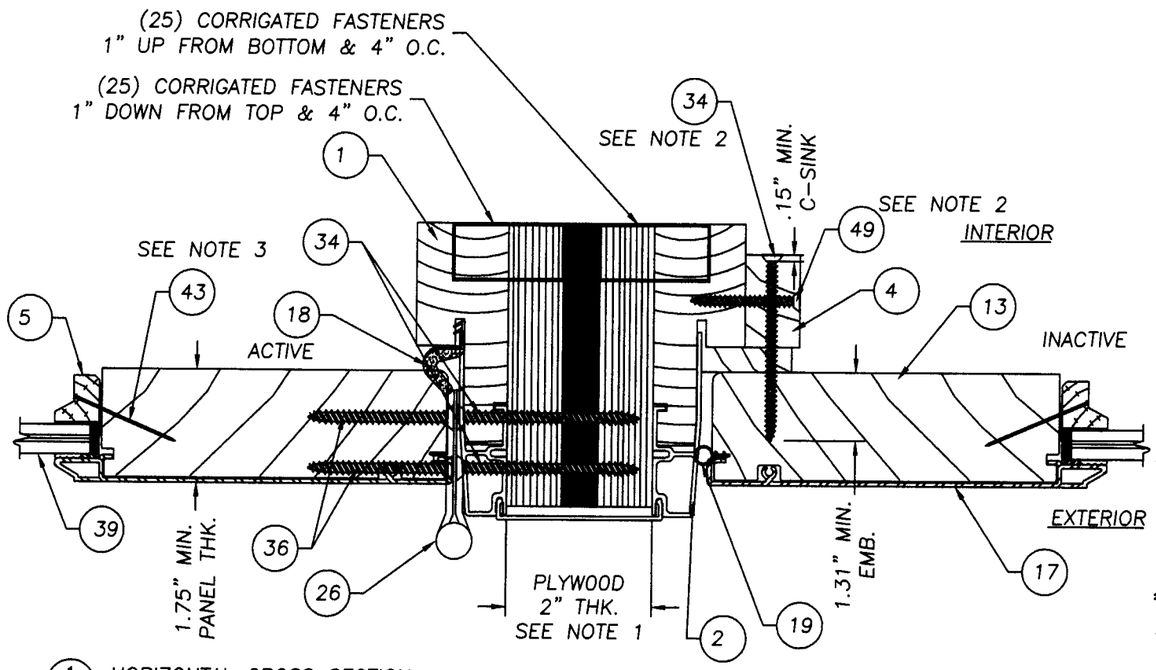


1/4 HORIZONTAL CROSS SECTION
@ MULLION, TYP.

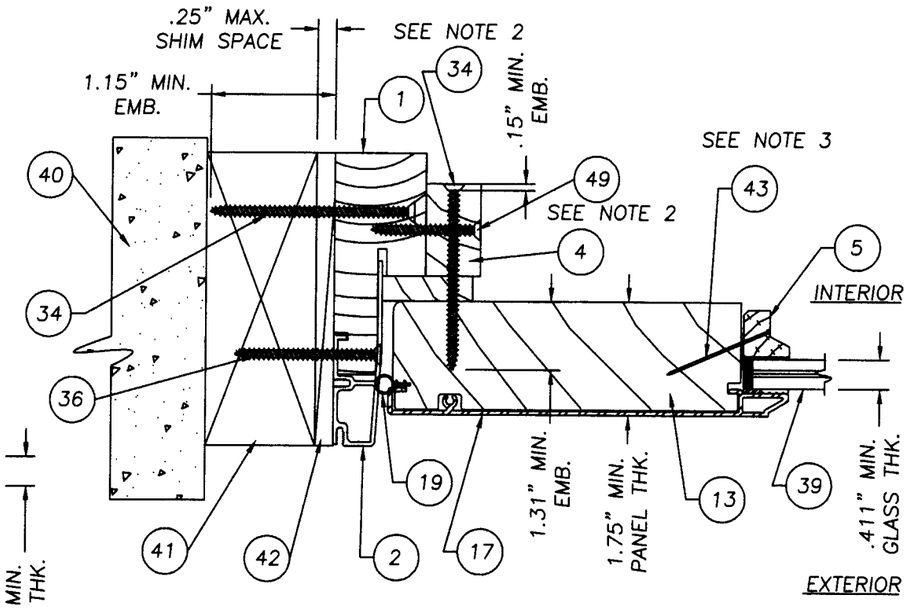


2/4 HORIZONTAL CROSS SECTION
@ SIDELITE TO BUCK, TYP.

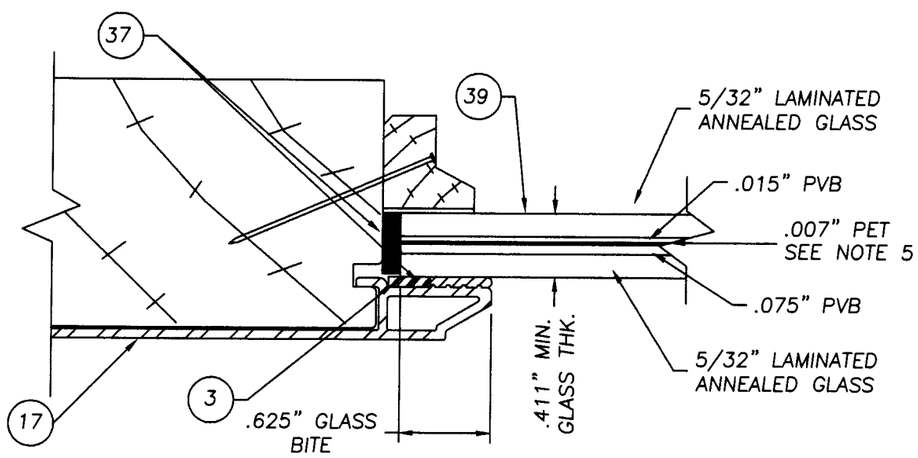


GLAZING DETAIL (SEA STORM TYPE "B" WITHOUT TAIL)

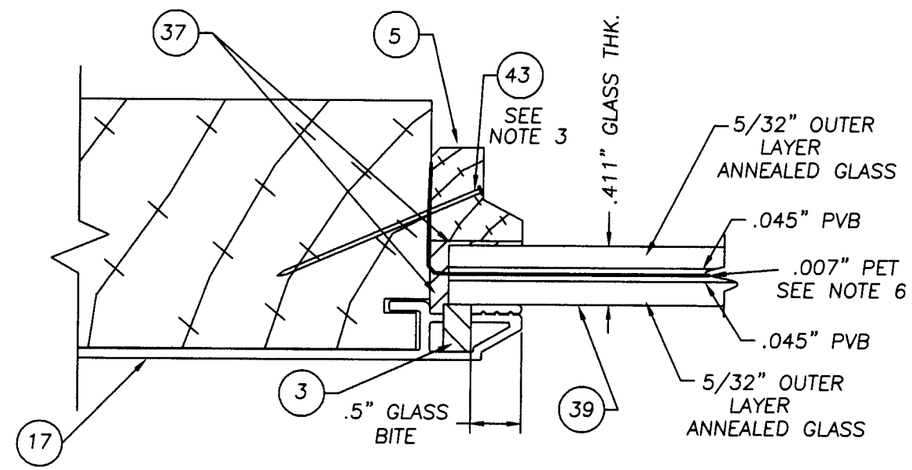


GLAZING DETAIL (SEA STORM TYPE "B" WITH TAIL)

NOTES:

1. 2" THICK MULLION CONSISTS OF (2) PIECES OF 3/4" LVL WITH A PIECE OF 1/2" 4PLY EXTERIOR RATED SHEATHING IN THE MIDDLE.
2. SPACING: 4" DOWN FROM TOP & 21" O.C. (5) TOTAL EA. SIDE. HEAD & SILL (3) EA. 4.5" IN FROM CORNERS & 12" O.C.
3. SPACING FOR THE BRAD TRIM NAIL IS 2" IN FROM CORNERS AND A MAX. OF 12" O.C.
4. THE SURFACE BOLT IS ATTACHED TO THE INACTIVE DOOR ONLY @ THE TOP & BOTTOM WITH ITEM #48 A #10 X 1-1/4" TYPE "A"SCREW.
5. THE PET FILM IS CUT FLUSH TO THE EDGE OF THE GLASS.
6. THE (3) PART INNER LAYER CONSISTS OF 0.007" PET BETWEEN (2) LAYERS OF 0.045" PVB. THE 0.007" LAYER OF PET EXTENDS PAST THE END OF THE GLASS AND IS MECHANICALLY SECURED TO THE DOOR PANEL BY THE GLASS STOP AND THE BRAD TRIM NAIL.

Approved as complying with the Florida Building Code
Date MAY 30, 2002
NOA# 02-0328.10
Miami Dade Product Control Division
By Manuel Perez


EAGLE WINDOW & DOOR, INC.
375 EAST 9th St.
DUBUQUE,, IA 52004-1072
PH. 319.556.4408


PRODUCT: EAGLE ALUMINUM CLAD OUT-SWING GLAZED 8-0 MAX. FRENCH DOOR

PART OR ASSEMBLY: HORIZONTAL CROSS SECTIONS & GLAZING DETAILS

REVISIONS

| NO. | DATE | | BY |
|---|---|---|---|
| 2 | 2/1/02 | GLAZING DET/ DES PRESSURE | RW |
| 1 | 9/19/00 | GENERAL REVISION | TJH |


RW BUILDING CONSULTANTS, INC.
813.684.3831


DATE: 7/27/00
SCALE: N.T.S.
DWG. BY: TJH
CHK. BY: RW
DRAWING NO.: S-9957
SHEET 4 OF 7

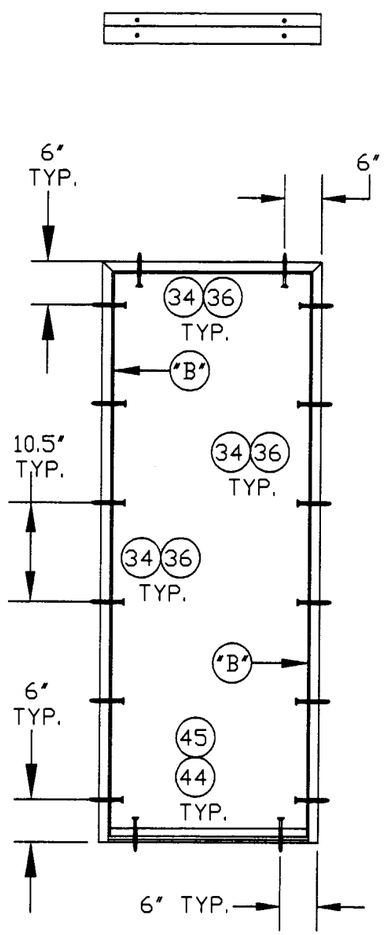


SINGLE FIXED PANEL

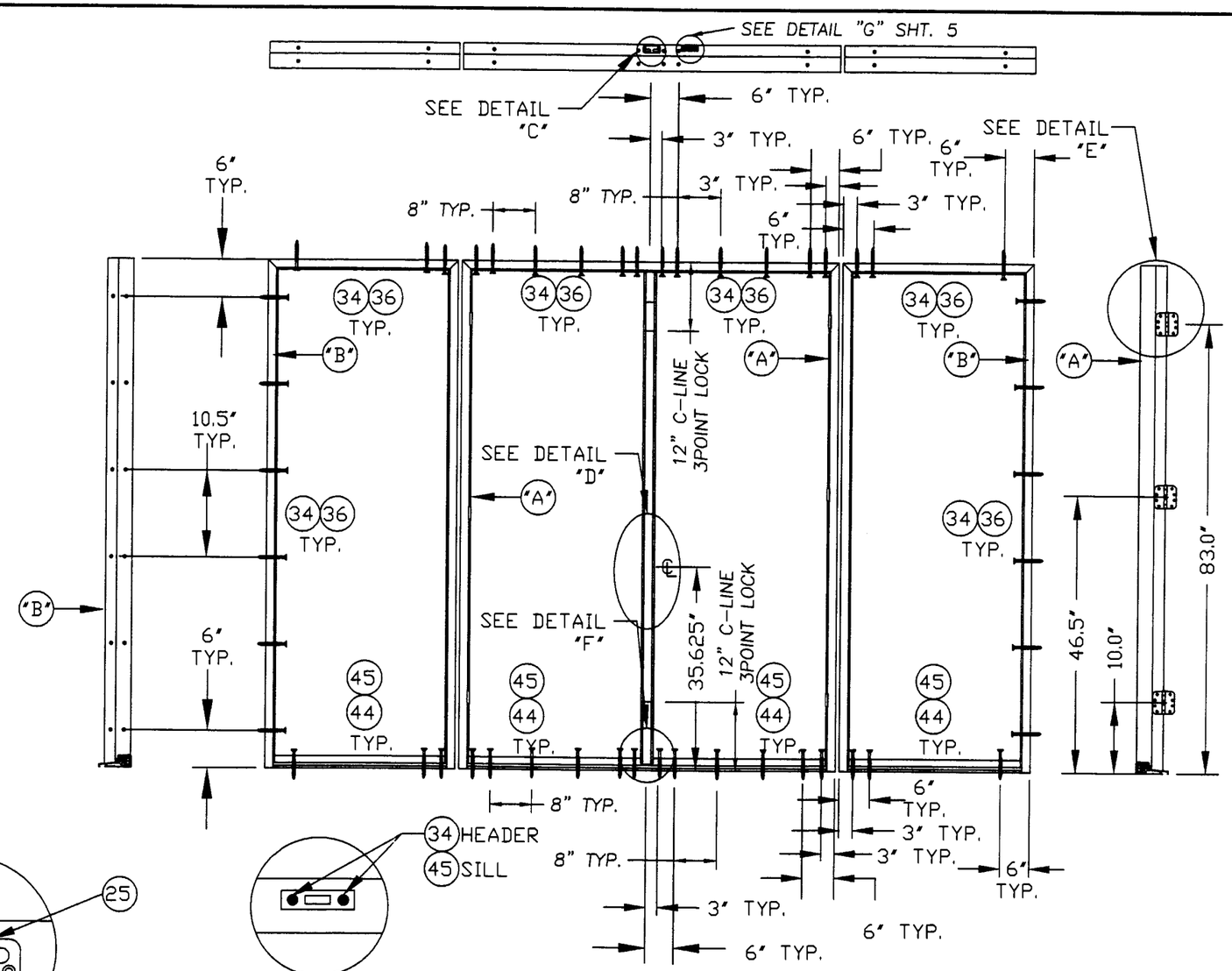


DOUBLE DOOR W/SIDELITES
COMBINATION MAXIMUM FOUR PANELS
(PANELS MAY BE ANY COMBINATION OF ACTIVE OR INACTIVE)

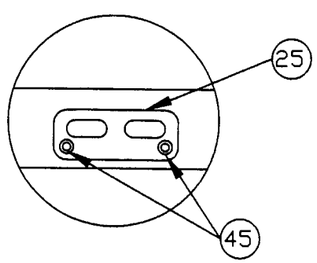


DETAIL "F"



DETAIL "G"

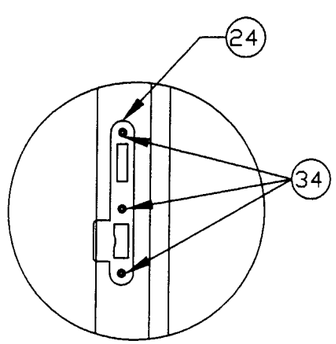


DETAIL "D"

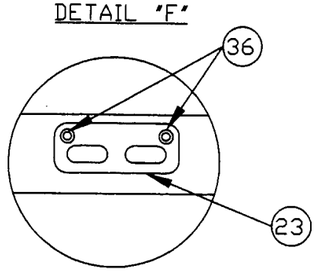


DETAIL "C"

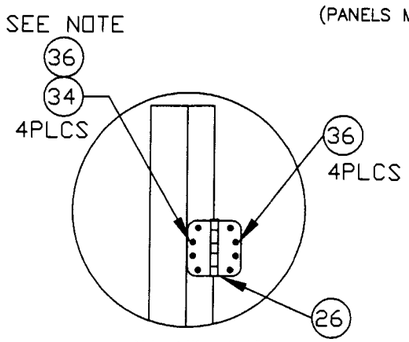


DETAIL "E"

NOTE
WHEN ANCHORING THE HINGE JAMB TO A MULLION USE ITEM #34 (#8 x 2 1/2" L. SCREW). WHEN ANCHORING THE HINGE JAMB TO THE BUCK USE ITEM #36 (#8 x 2" L. SCREW).

Approved as complying with the Florida Building Code
Date MAY 30, 2002
NOA# 02-0328.10
Miami Dade Product Control Division
By Manuel Perez


EAGLE WINDOW & DOOR, INC.
375 EAST 9th St.
DUBUQUE,, IA 52004-1072
PH. 319.556.4408


PRODUCT: EAGLE ALUMINUM CLAD OUT-SWING GLAZED 8-0 MAX. FRENCH DOOR

PART OR ASSEMBLY: ANCHORING LOCATIONS & DETAILS

REVISIONS

| NO. | DATE | | BY |
|---|---|---|---|
| 2 | 2/1/02 | GLAZING DET/DES PRESSURE | RW |
| 1 | 9/19/00 | GENERAL REVISION | TJH |


RW BUILDING CONSULTANTS, INC.
813.684.3831


DATE: 7/27/00
SCALE: N.T.S.
DWG. BY: TJH
CHK. BY: RW
DRAWING NO.: S-9957
SHEET 5 OF 7

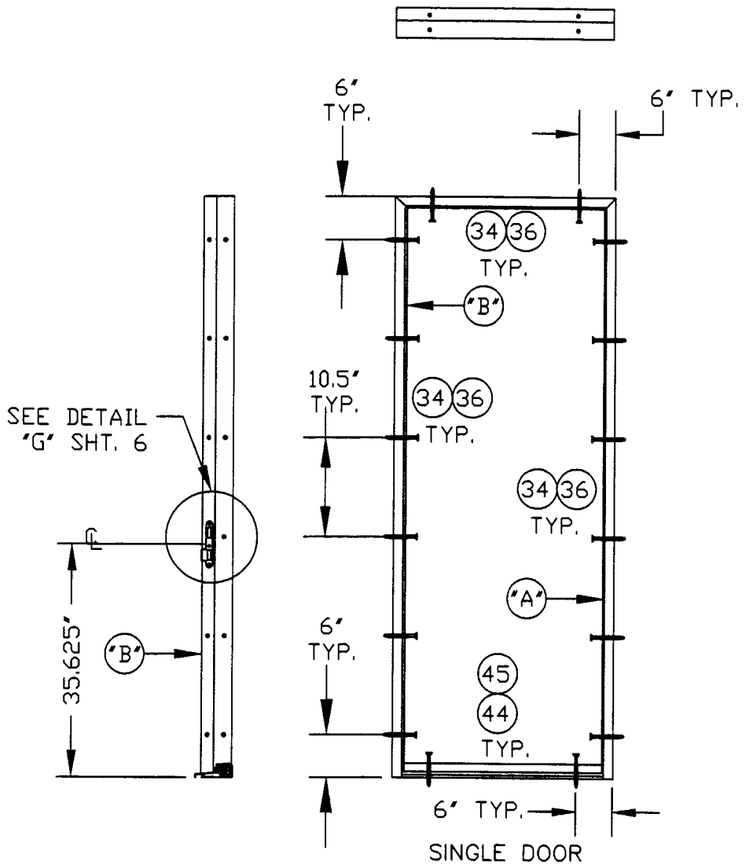


SINGLE DOOR

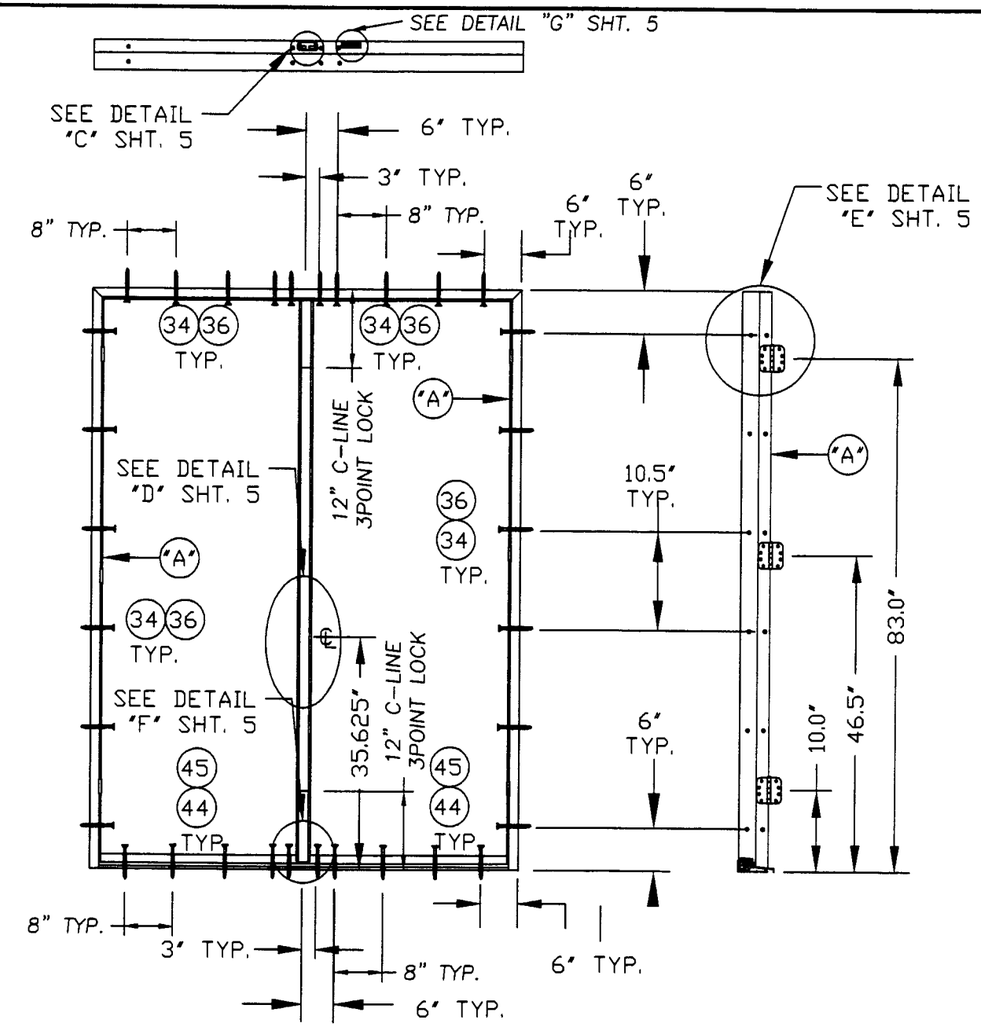


DOUBLE DOOR

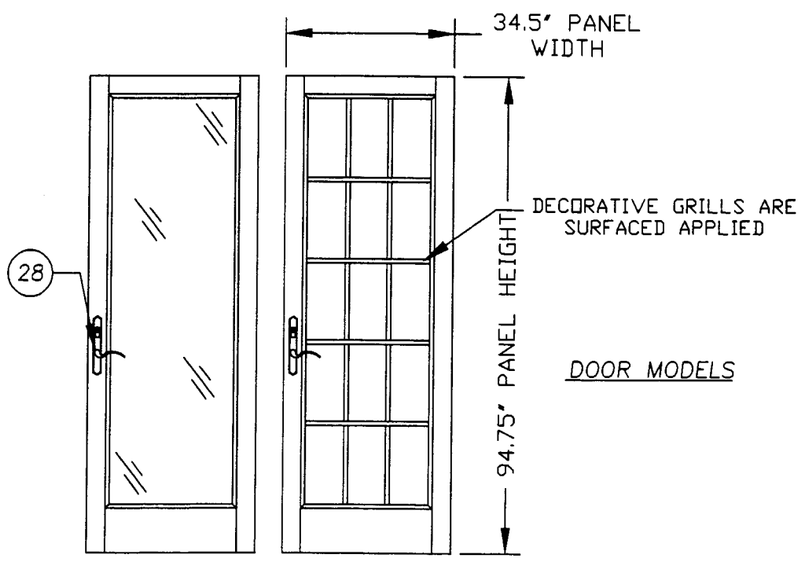


DOOR MODELS

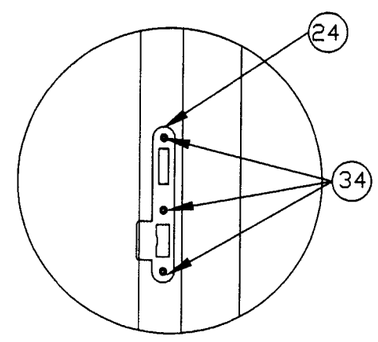


DETAIL "G"

Approved as complying with the Florida Buiding Code
Date MAY 30, 2002
NOA# 02-0328.10
Miami Dade Product Control Division
By Manuel Perez


**EAGLE WINDOW & DOOR, INC.**
375 EAST 9th St.
DUBUQUE,, IA 52004-1072
PH. 319.556.4408


PRODUCT: EAGLE ALUMINUM CLAD OUT-SWING GLAZED 8-0 MAX. FRENCH DOOR

PART OR ASSEMBLY: ANCHORING LOCATIONS & DOOR MODELS

REVISIONS

| NO. | DATE | | BY |
|---|---|---|---|
| 2 | 2/1/02 | GLAZING DET/DES PRESSURE | RW |
| 1 | 9/19/00 | GENERAL REVISION | TJH |


RW BUILDING CONSULTANTS, INC.
813.684.3831


DATE: 7/27/00
SCALE: N.T.S.
DWG. BY: TJH
CHK. BY: RW
DRAWING NO.: S-9957
SHEET 6 OF 7

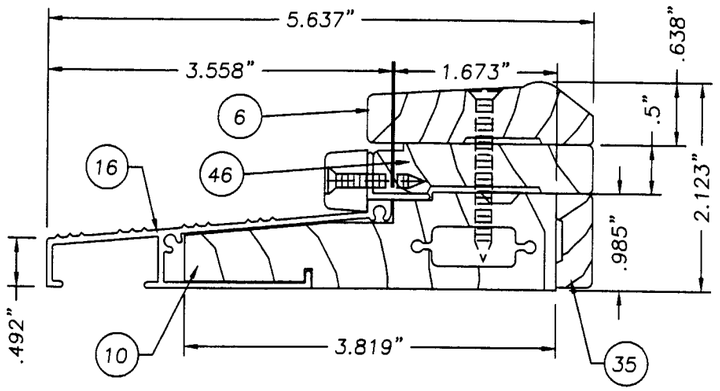


ASSEMBLED THRESHOLD
ALUMINUM & WOOD

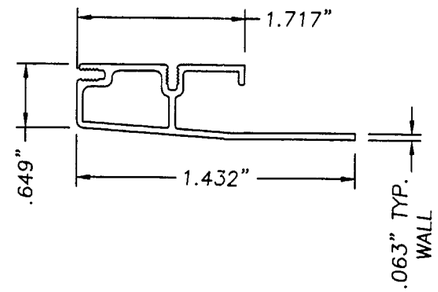


FRAME COVER
ALUMINUM, .063" WALL TYP.

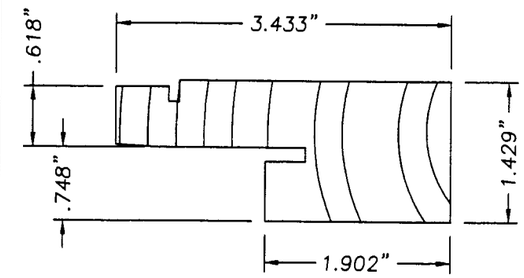


FRAME MEMBER
WOOD

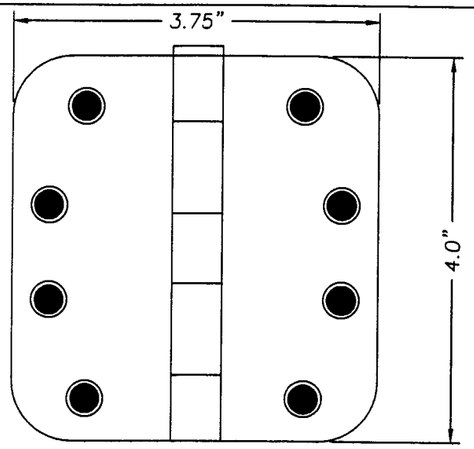


4" x 3 3/4" HINGE
.130" STEEL

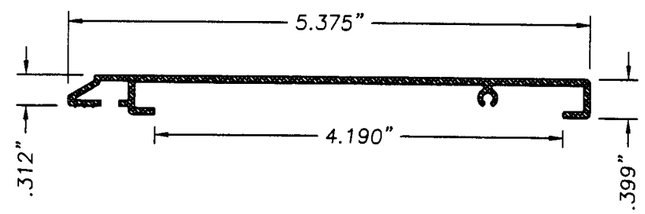


PANEL CLADDING
ALUMINUM, .067" WALL TYP.

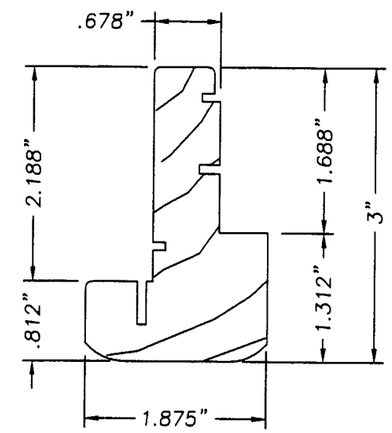


OUTSWING WOOD ASTRAGAL

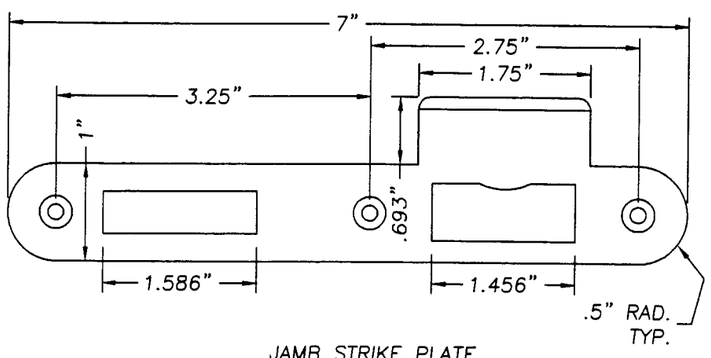


JAMB STRIKE PLATE
.105" THK. STEEL

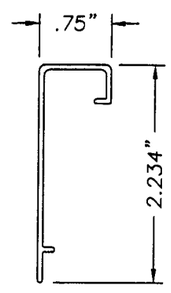


ASTRAGAL COVER
ALUMINUM, .050" WALL TYP.

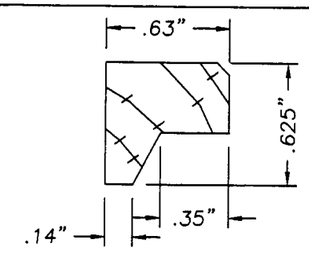


WOOD GLASS STOP

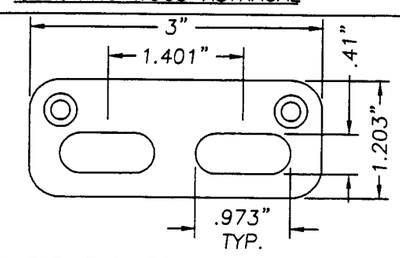


SILL STRIKE PLATE = .375" THK. STEEL
HEAD STRIKE PLATE = ..105" THK. STEEL

Approved as complying with the Florida Buiding Code
Date MAY 30, 2002
NOA# 02-0328.10
Miami Dade Product Control Division
By Manuel Diaz


**EAGLE WINDOW & DOOR, INC.**
375 EAST 9th St.
DUBUQUE,, IA 52004-1072
PH. 319.556.4408


PRODUCT: EAGLE ALUMINUM CLAD OUT-SWING GLAZED 8-0 MAX. FRENCH DOOR

PART OR ASSEMBLY: UNIT COMPONENTS

| NO. | DATE | REVISIONS | BY |
|---|---|---|---|
| 2 | 2/1/02 | GLAZING DET/DES PRESSURE | RW |
| 1 | 9/19/00 | GENERAL REVISION | TJH |

RW BUILDING CONSULTANTS, INC.
813.684.3831

DATE: 7/27/00
SCALE: N.T.S
DWG. BY: TJH
CHK. BY: RW
DRAWING NO.: S-9957
SHEET 7 OF 7