MIAMI-DADE

**BUILDING CODE COMPLIANCE OFFICE (BCCO)**
**PRODUCT CONTROL DIVISION**

**MIAMI-DADE** COUNTY, FLORIDA
METRO-DADE FLAGLER BUILDING
**140 WEST FLAGLER STREET, SUITE 1603**
MIAMI, FLORIDA 33130-1563
(305) 375-2901 FAX (305) 375-2908

# NOTICE OF ACCEPTANCE (NOA)

**Seasonshield, Inc.**
**355 Center Court**
**Venice, FL 34292**

**SCOPE:**
This NOA is being issued under the applicable rules and regulations governing the use of construction materials. The documentation submitted has been reviewed by Miami-Dade County Product Control Division and accepted by the Board of Rules and Appeals (BORA) to be used in Miami Dade County and other areas where allowed by the Authority Having Jurisdiction (AHJ).

This NOA shall not be valid after the expiration date stated below. The Miami-Dade County Product Control Division (In Miami Dade County) and/or the AHJ (in areas other than Miami Dade County) reserve the right to have this product or material tested for quality assurance purposes. If this product or material fails to perform in the accepted manner, the manufacturer will incur the expense of such testing and the AHJ may immediately revoke, modify, or suspend the use of such product or material within their jurisdiction. BORA reserves the right to revoke this acceptance, if it is determined by Miami-Dade County Product Control Division that this product or material fails to meet the requirements of the applicable building code.

This product is approved as described herein, and has been designed to comply with the High Velocity Hurricane Zone of the Florida Building Code.

**DESCRIPTION: Series "6600" Aluminum Fixed Window –Impact**

**APPROVAL DOCUMENT:** Drawing No. **02-0166**, titled "Series 6600 Aluminum Fixed Window", Sheets 1 through 3 of 3, dated 03/11/02 with last revision on 06-04-03, prepared by manufacturer, signed and sealed by Kelvyn A. Whitfield, P.E., bearing the Miami-Dade County Product Control Approval stamp with the Notice of Acceptance number and approval date by the Miami-Dade County Product Control Division.

**MISSILE IMPACT RATING: Large Missile Impact Resistant**

**LABELING:** Each unit shall bear a permanent label with the manufacturer's name or logo, city, state and following statement: "Miami-Dade County Product Control Approved", unless otherwise noted herein.

**RENEWAL** of this NOA shall be considered after a renewal application has been filed and there has been no change in the applicable building code negatively affecting the performance of this product.

**TERMINATION** of this NOA will occur after the expiration date or if there has been a revision or change in the materials, use, and/or manufacture of the product or process. Misuse of this NOA as an endorsement of any product, for sales, advertising or any other purposes shall automatically terminate this NOA. Failure to comply with any section of this NOA shall be cause for termination and removal of NOA.

**ADVERTISEMENT:** The NOA number preceded by the words Miami-Dade County, Florida, and followed by the expiration date may be displayed in advertising literature. If any portion of the NOA is displayed, then it shall be done in its entirety.

**INSPECTION:** A copy of this entire NOA shall be provided to the user by the manufacturer or its distributors and shall be available for inspection at the job site at the request of the Building Official.
This NOA consists of this page 1 as well as approval document mentioned above.
The submitted documentation was reviewed by **Ishaq I. Chanda, P.E.**

7/2/3

PRODUCT CONTROL ACCEPTED

**NOA No 02-0408.01**
**Expiration Date: July 24, 2008**
**Approval Date: July 24, 2003**

**Seasonshield, Inc**

**NOTICE OF ACCEPTANCE: EVIDENCE SUBMITTED**
(For File ONLY. Not part of NOA)

**A. DRAWINGS**

1. Manufacturer's die drawings and sections.
2. Drawing No. **02-0166**, titled "Series 6600 Aluminum Fixed Window", Sheets 1 through 3 of 3, dated 03/11/02 with last revision on 06-04-03, prepared by manufacturer, signed and sealed by Kelvyn A. Whitfield, P.E.,

**B. TESTS**

1. Test reports on
   1) Air Infiltration Test, per SFBC, PA 202-94
   2) Uniform Static Air Pressure Test, Loading per SFBC PA 202-94
   3) Water Resistance Test, per SFBC, PA 202-94
   4) Large Missile Impact Test per SFBC, PA 201-94
   5) Cyclic Wind Pressure Loading per SFBC, PA 203-94
   6) Forced Entry Test, per SFBC 3603.2 (b) and PA 202-94

   along with marked-up drawings and installation diagram of Aluminum fixed window, prepared by Fenestration Testing laboratory Inc, Test Report No. **FTL 3356 (02001)**, January 28, 2002, signed and sealed by Ramesh Patel, P.E.(This test report has been revised by addendum letter dated 04-14-03, issued by Fenestration Testing lab)
2. Additional Test reports on
   1) Air Infiltration Test, per FBC, PA 202-94
   2) Uniform Static Air Pressure Test, Loading per FBC PA 202-94
   3) Water Resistance Test, per FBC, PA 202-94
   4) Large Missile Impact Test per FBC, PA 201-94
   5) Cyclic Wind Pressure Loading per FBC, PA 203-94
   6) Forced Entry Test, per ASTMF-588 and PA 202-94

   along with marked-up drawings and installation diagram of Aluminum fixed window, prepared by Certified Testing laboratories, Test Report No. **CTLA-1019W**, dated Feb 07, 2003, signed and sealed by Ramesh Patel, P.E.

**C. CALCULATIONS**

1. Anchor Calculations and structural analysis, dated 04-03-02, prepared, signed and sealed by Kelvyn A. Whitfield, P.E.

**D. MATERIAL CERTIFICATIONS**

1. Notice of Acceptance No. **01-1204.01** issued to E.I. DuPont DeNemours for "Sentry Glass Plus" expiring on 01/14/07.
2. Notice of Acceptance No. **01-0205.02** issued to Solutia Inc for "Saflex/KeepSafeMax" expiring on 05/21/06.

**E. STATEMENTS**

1. Statement letter of conformance, dated March 12, 2002, signed and sealed by Kelvyn A. Whitfield, P.E.
2. Statement letter of no financial interest, dated April03, 2002, signed and sealed by Kelvyn A. Whitfield, P.E.
3. Laboratory compliance letter issued, as part of test report by Fenestration testing lab & Certified Testing laboratories, as referenced above.

**F. OTHER:** Additional test per request letter dated November 01, 2002 by BCCO.

Ishaq I. Chanda

**Ishaq I. Chanda, P.E.**
**Product Control Examiner**
**NOA No 02-0408.01**
**Expiration Date: July 24, 2008**
**Approval Date: July 24, 2003**

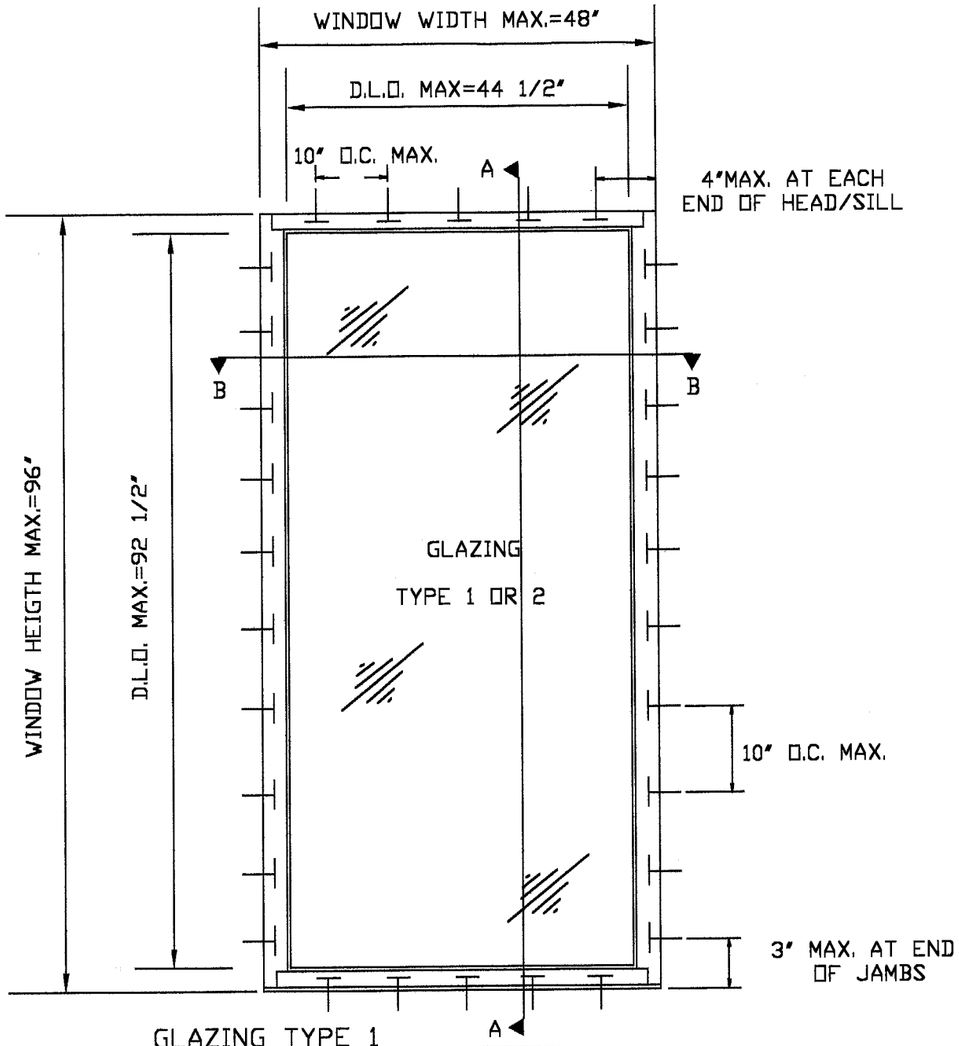


GLAZING TYPE 1

| DESIGN PRESSURE RATING WITH .481" LAMINATED GLASS 3/16" H.S./.090 SENTRY GLASS PLUS INNERLAYER/ 3/16 H.S. | | | |
|---|---|---|---|
| WINDOW SIZE | | 1/4" X 2 1/2" ITW TAPCONS | |
| HEIGTH | WIDTH | EXTERIOR | INTERIOR |
| 96" | 48" | 60.0 | 60.0 |

GLAZING TYPE 2

| DESIGN PRESSURE RATING WITH .356" LAMINATED GLASS 1/8" ANN./.090 SENTRY GLASS PLUS INNERLAYER/ 1/8" ANN. | | | |
|---|---|---|---|
| WINDOW SIZE | | 1/4" X 2 1/2" ITW TAPCONS | |
| HEIGTH | WIDTH | EXTERIOR | INTERIOR |
| 96" | 48" | 18.1 | 18.1 |

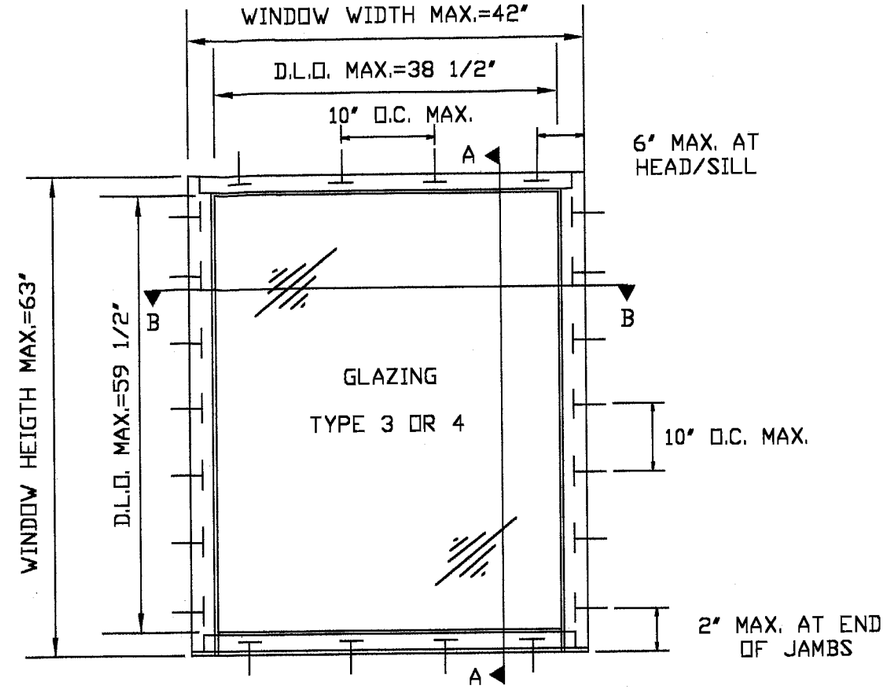


GLAZING TYPE 3

| DESIGN PRESSURE RATING WITH .344" LAMINATED GLASS 1/8" H.S./ .090 SAFLEX/KEEPSAF INNERLAYER/ 1/8" H.S. | | | |
|---|---|---|---|
| WINDOW SIZE | | 1/4" X 2 1/2" ITW TAPCONS | |
| HEIGTH | WIDTH | EXTERIOR | INTERIOR |
| 63" | 42" | 60.0 | 60.0 |

GLAZING TYPE 4

| DESIGN PRESSURE RATING WITH .344" LAMINATED GLASS 1/8" ANN./ .090 SAFLEX/KEEPSAF INNERLAYER/ 1/8" ANN. | | | |
|---|---|---|---|
| WINDOW SIZE | | 1/4" X 2 1/2" ITW TAPCONS | |
| HEIGTH | WIDTH | EXTERIOR | INTERIOR |
| 63" | 42" | 38.1 | 38.1 |

## GENERAL NOTES

1. INSTALLATION OF 1 X P.T. WOOD BUCK TO BE ENGINEERED SEPARATELY TO TAKE WIND LOADS IMPOSED BY THE WINDOWS AND TO BE REVIEWED BY BUILDING OFFICIAL.
2. THIS PRODUCT IS DESIGNED AS PER THE FLORIDA BUILDING CODE 2001 EDITION FOR DADE COUNTY. ALSO FOR WIND LOADS AS PER ASCE 7-98.
3. ANCHORS SHALL BE AS LISTED AND SPACING AS SHOWN ON DETAILS.
4. ALL HARDWARE & FASTENERS SHALL BE IN ACCORDANCE WITH THESE DRAWINGS & MAY NOT VARY UNLESS SPECIFICALLY MENTIONED ON THE DRAWINGS.

Approved as complying with the Florida Building Code
Date JULY 24, 2003
NOA# 02-0408.01
Miami Dade Product Control Division
By Chaq I. Chanda


KELVYN A. WHITFIELD
MECHANICAL ENGINEER
1002 N.E 116 ST- MIAMI FL. 33161
TEL. (305) 659-1230
FAX. (305) 895-9976


SEASONSHIELD INC.
355 CENTER COURT
VENICE, FL. 34292
PHONE: (800) 869-6699

SERIES: 6600 ALUMINUM.
FIXED WINDOW
LARGE MISSILE IMPACT

JOB NO.: 02-0166
DWG. NO.: 02-0166

REVISIONS DESCRIPTION

| NO. | DATE | |
|---|---|---|
| 1 | 9/9/02 | AS PER DADE COUNTY REQ. |
| 2 | 3/24/03 | AS PER DADE COUNTY REQ. |
| 3 | 4/17/03 | AS PER DADE COUNTY REQ. |
| 4 | 6/4/03 | AS PER DADE COUNTY REQ. |

DATE: 03/11/02

SCALE:

DWG. BY: D.M

SHEET 1 OF 3


KELVYN A. WHITFIELD
MECH. ENGINEER.
FLA. PE # 24140


6/14/03

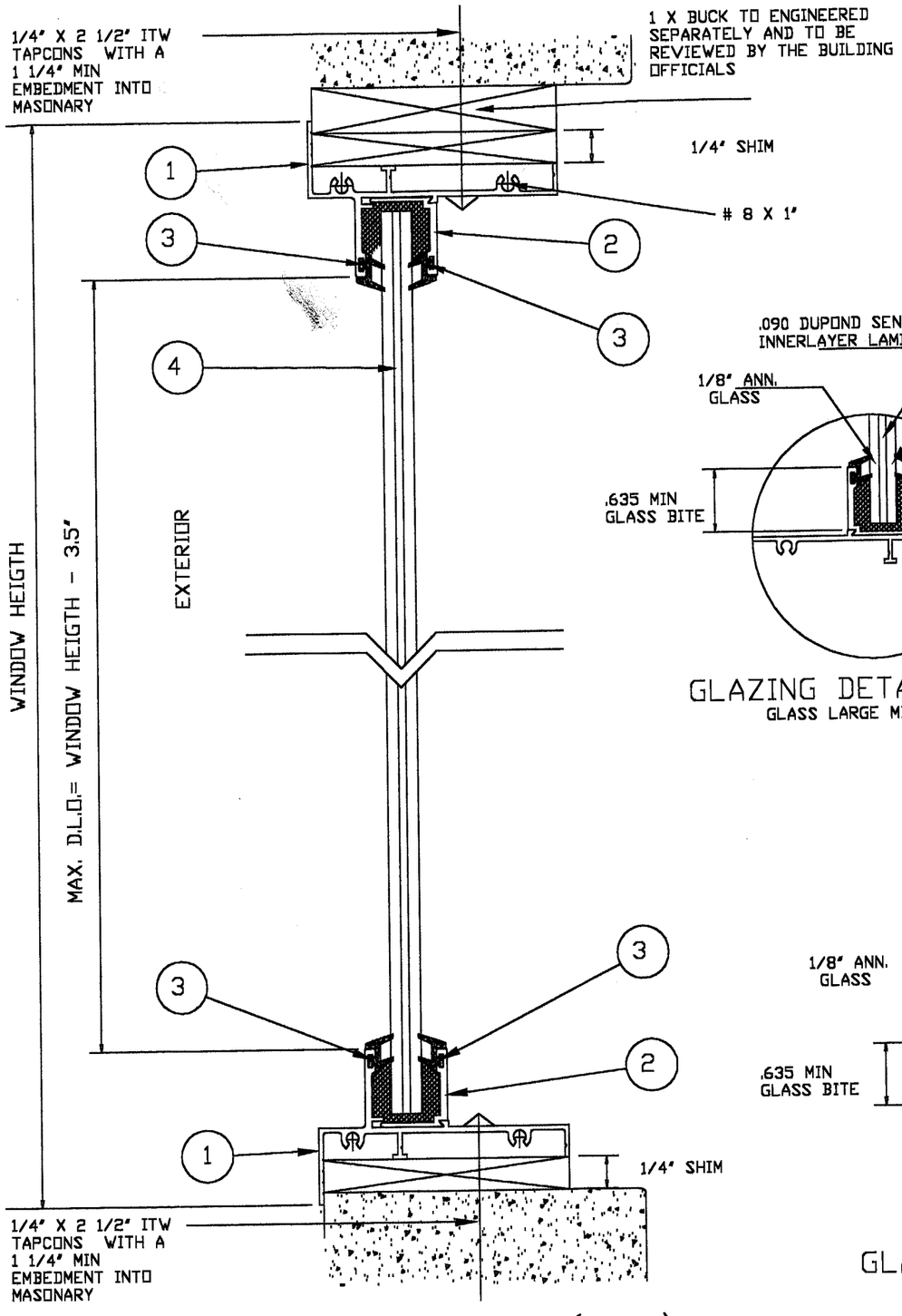


*VERTICAL LAYOUT (A-A)*

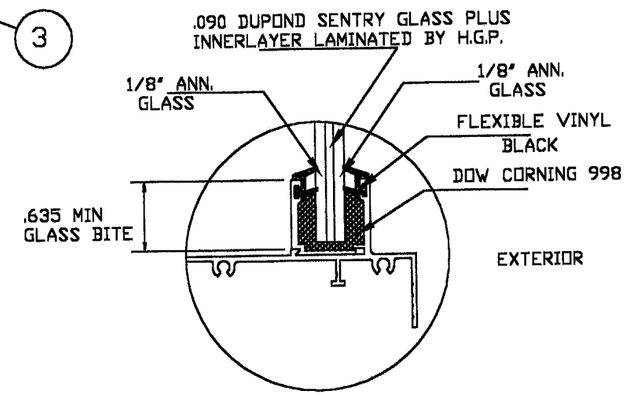


GLAZING DETAIL TYPE 2
GLASS LARGE MISSILE

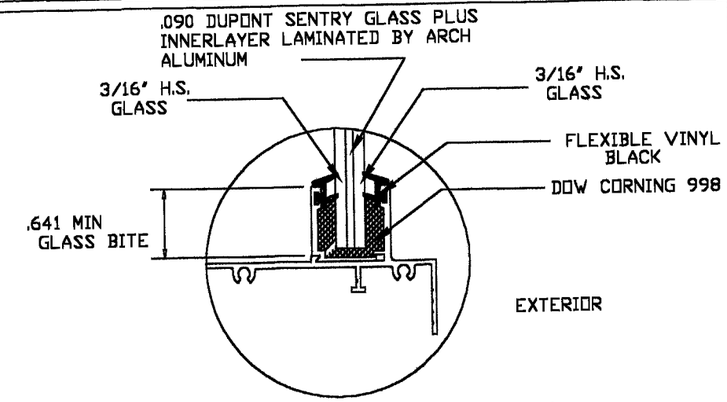


GLAZING DETAIL TYPE 1
GLASS LARGE MISSILE

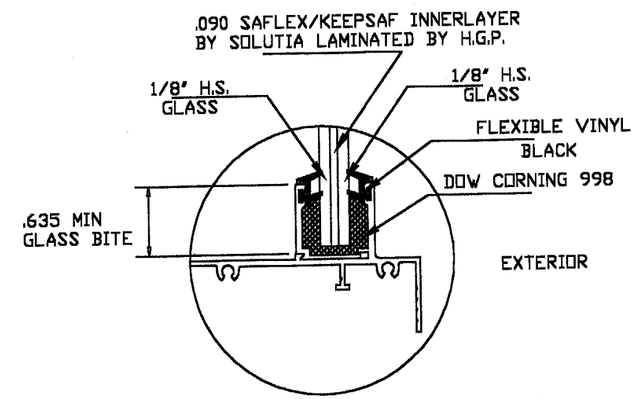


GLAZING DETAIL TYPE 3
GLASS LARGE MISSILE

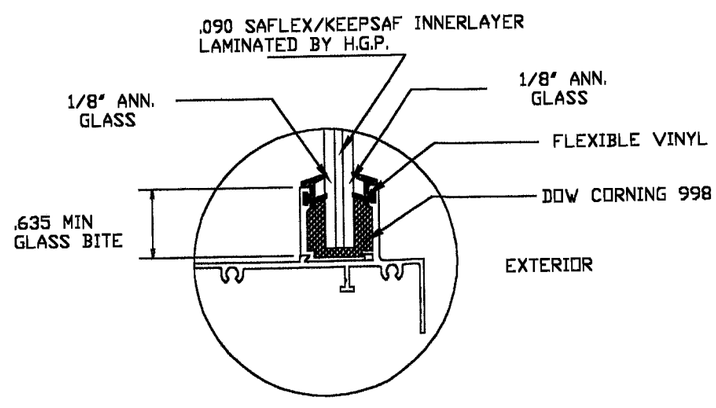


GLAZING DETAIL TYPE 4
GLASS LARGE MISSILE

Approved as complying with the Florida Building Code
Date July 24, 2003
NOA# 02-0408.01
Miami Dade Product Control Division
By Shaq I. Chanda


KELVYN A. WHITFIELD
MECHANICAL ENGINEER
1002 N.E 116 ST- MIAMI FL. 33161
TEL. (305) 659-1230
FAX. (305) 895-9976


SEASONSHIELD INC.
355 CENTER COURT
VENICE, FL. 34292
PHONE: (800) 869-6699

SERIES: 6600 ALUMINUM.
FIXED WINDOW
LARGE MISSILE IMPACT

JOB NO.: 02-0166
DWG. NO.: 02-0166

REVISIONS DESCRIPTION

| NO. | DATE | |
|---|---|---|
| 1 | 9/9/02 | AS PER DADE COUNTY REQ. |
| 2 | 3/24/03 | AS PER DADE COUNTY REQ. |
| 3 | 4/17/03 | AS PER DADE COUNTY REQ. |
| 4 | 6/4/03 | AS PER DADE COUNTY REQ. |

DATE: 03/11/02
SCALE:
DWG. BY: D.M
SHEET 2 OF 3

KELVYN A. WHITFIELD
MECH. ENGINEER.
FLA. PE # 24140
6/4/03

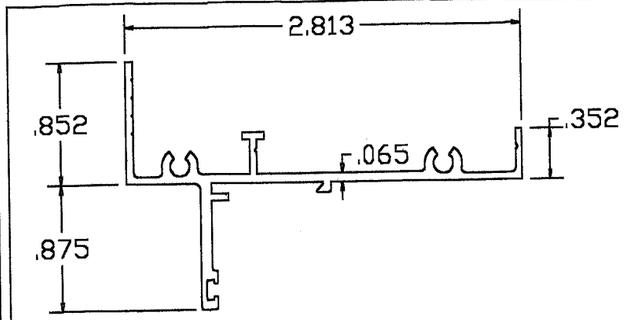


1 FULL SCALE

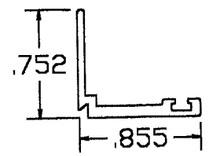


2 FULL SCALE

| ITEM No. | PART No. | DESCRIPTION | ALLOY | SUPPLIER |
|---|---|---|---|---|
| 1 | 11342 | D.H. MAIN HEAD/JAMB/SILL | 6063-T6 | |
| 2 | 11344 | GLAZING BEAD | 6063-T6 | |
| 3 | 601GL | FLEX. VINYL BLACK | | |
| 4 | GLASS SEE ELEVATION & CORRESPONDING DESIGN PRESSURE TABLES | | | |

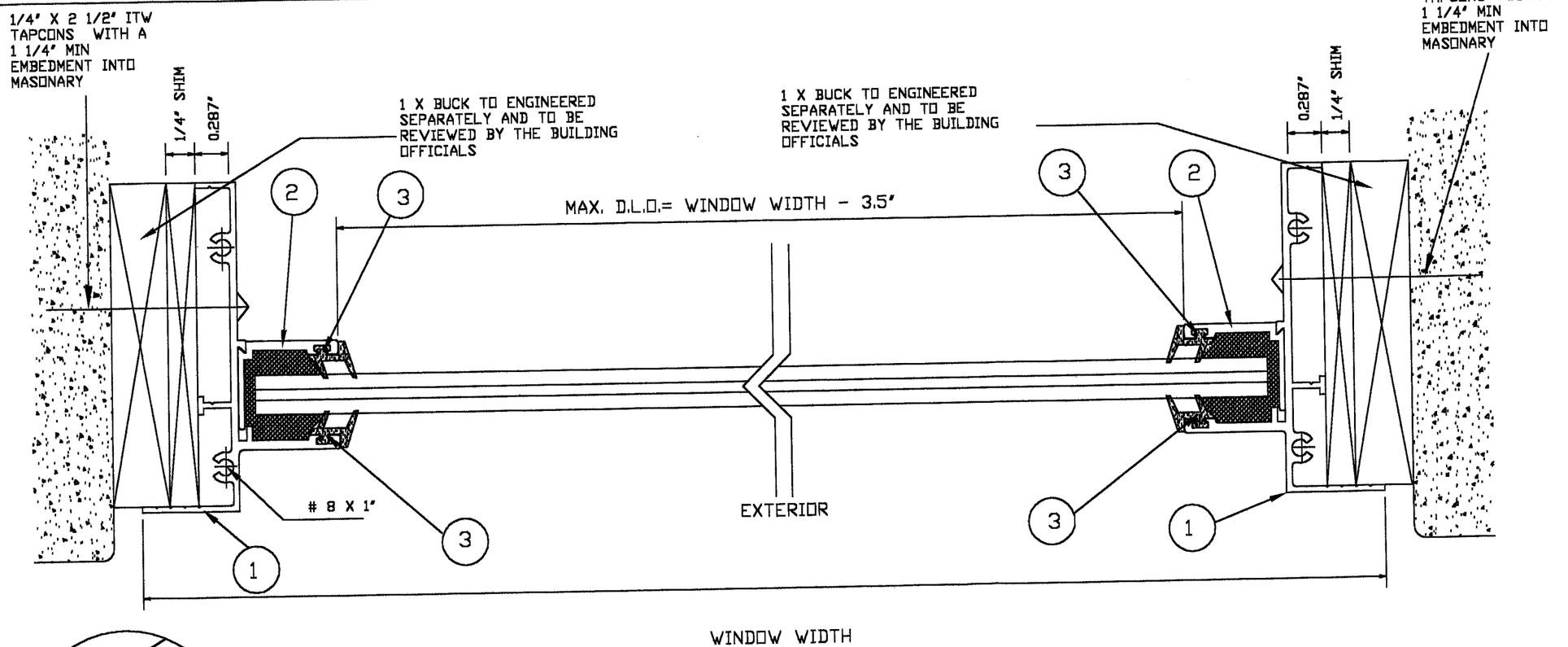


# HORIZONTAL LAYOUT (B-B)

Approved as complying with the Florida Building Code
Date July 24, 2003
NOA# 02-0408.01
Miami Dade Product Control Division
By Ishaq I. Chande

KELVYN A. WHITFIELD
MECHANICAL ENGINEER
1002 N.E 116 ST- MIAMI FL. 33161
TEL. (305) 659-1230
FAX. (305) 895-9976

SEASONSHIELD INC.
355 CENTER COURT
VENICE, FL. 34292
PHONE: (800) 869-6699

SERIES: 6600 ALUMINUM.
FIXED WINDOW
LARGE MISSILE IMPACT

JOB NO.: 02-0166
DWG. NO.: 02-0166

REVISIONS DESCRIPTION

| NO. | DATE | |
|---|---|---|
| 1 | 9/9/02 | AS PER DADE COUNTY REQ. |
| 2 | 3/24/03 | AS PER DADE COUNTY REQ. |
| 3 | 4/17/03 | AS PER DADE COUNTY REQ. |
| 4 | 6/4/03 | AS PER DADE COUNTY REQ. |

DATE: 03/11/02
SCALE:
DWG. BY: D.M
SHEET 3 OF 3

KELVYN A. WHITFIELD
MECH. ENGINEER.
FLA. PE # 24140
6/14/03