MIAMI-DADE

BUILDING CODE COMPLIANCE OFFICE (BCCO)
PRODUCT CONTROL DIVISION

MIAMI-DADE COUNTY, FLORIDA
METRO-DADE FLAGLER BUILDING
140 WEST FLAGLER STREET, SUITE 1603
MIAMI, FLORIDA 33130-1563
(305) 375-2901 FAX (305) 375-2908

NOTICE OF ACCEPTANCE (NOA)

Folding Shutter Corporation
7089 Hemstreet Place
West Palm Beach, FL 33413

SCOPE:

This NOA is being issued under the applicable rules and regulations governing the use of construction materials. The documentation submitted has been reviewed by Miami-Dade County Product Control Division and accepted by the Board of Rules and Appeals (BORA) to be used in Miami Dade County and other areas where allowed by the Authority Having Jurisdiction (AHJ).

This NOA shall not be valid after the expiration date stated below. The Miami-Dade County Product Control Division (In Miami Dade County) and/or the AHJ (in areas other than Miami Dade County) reserve the right to have this product or material tested for quality assurance purposes. If this product or material fails to perform in the accepted manner, the manufacturer will incur the expense of such testing and the AHJ may immediately revoke, modify, or suspend the use of such product or material within their jurisdiction. BORA reserves the right to revoke this acceptance, if it is determined by Miami-Dade County Product Control Division that this product or material fails to meet the requirements of the applicable building code.

This product is approved as described herein, and has been designed to comply with the High Velocity Hurricane Zone of the Florida Building Code.

DESCRIPTION: Extruded Aluminum Bahama Shutter

APPROVAL DOCUMENT: Drawing No.1018, titled "Impact Bahama Shutter (Dade)", sheets 1 through 10, prepared, signed and sealed by Warren W. Schaefer P.E., dated November 22, 2001, bearing the Miami-Dade County Product Control Approval stamp with the Notice of Acceptance number and approval date by the Miami-Dade County Product Control Division.

MISSILE IMPACT RATING: Large and Small Missile Impact

LABELING: Each unit shall bear a permanent label with the manufacturer's name or logo, city, state and following statement: "Miami-Dade County Product Control Approved", unless otherwise noted herein.

RENEWAL of this NOA shall be considered after a renewal application has been filed and there has been no change in the applicable building code negatively affecting the performance of this product.

TERMINATION of this NOA will occur after the expiration date or if there has been a revision or change in the materials, use, and/or manufacture of the product or process. Misuse of this NOA as an endorsement of any product, for sales, advertising or any other purposes shall automatically terminate this NOA. Failure to comply with any section of this NOA shall be cause for termination and removal of NOA.

ADVERTISEMENT: The NOA number preceded by the words Miami-Dade County, Florida, and followed by the expiration date may be displayed in advertising literature. If any portion of the NOA is displayed, then it shall be done in its entirety.

INSPECTION: A copy of this entire NOA shall be provided to the user by the manufacturer or its distributors and shall be available for inspection at the job site at the request of the Building Official.

This NOA **revises NOA # 02-0226.07** and, consists of this page 1 as well as approval document mentioned above. The submitted documentation was reviewed by **Raul Rodriguez.**

PRODUCT CONTROL ACCEPTED

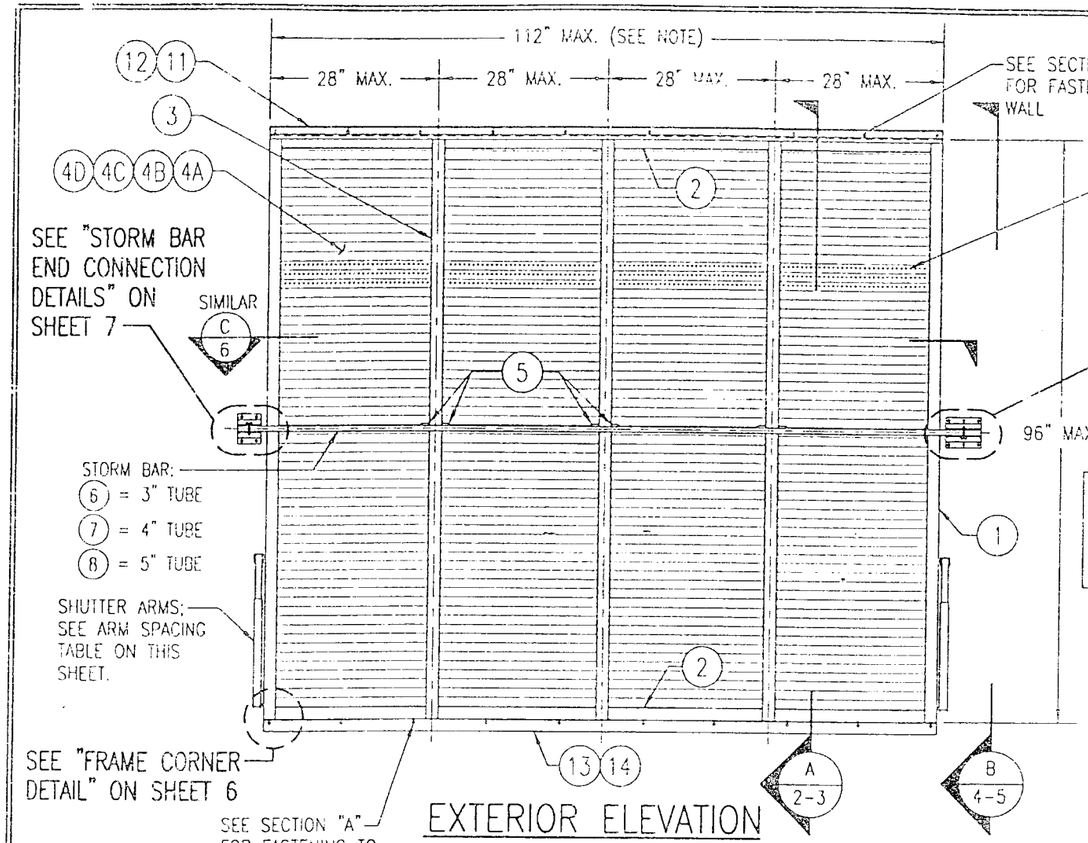

SEE SHEETS 9 & 10 FOR SPACING REQUIREMENTS OF STORM BARS FOR SINGLE & MULTIPLE BAR SHUTTERS.

EXTERIOR ELEVATION
QUAD PANEL SHUTTER

SCALE: 1/2"=1'-0"

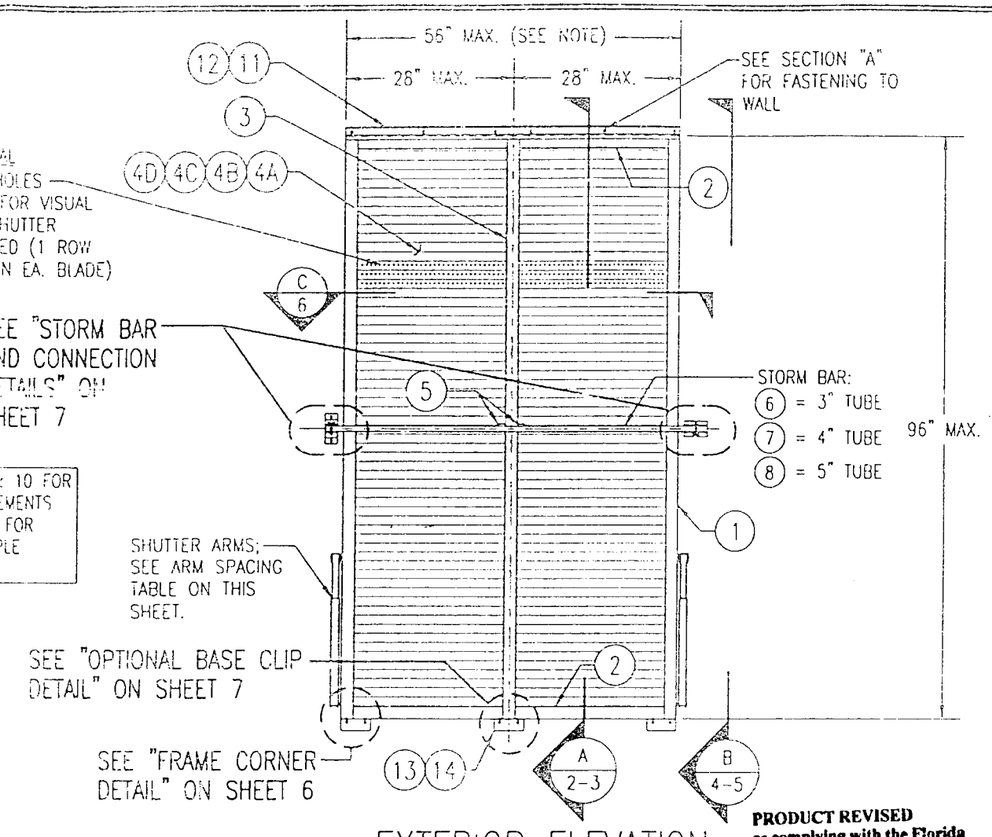

EXTERIOR ELEVATION
DOUBLE PANEL SHUTTER

SCALE: 1/2"=1'-0"

PRODUCT REVISED
as complying with the Florida Buiding Code
Acceptance No 02-0409.02
Expiration Date Nov. 15 2006
By
Miami Dade Product Control Division

NOTE: SINGLE & THREE PANEL SHUTTERS ARE ALSO PART OF THIS APPROVAL.

MAX. ALLOWABLE DESIGN WIND LOADS	
POSITIVE	NEGATIVE
80 PSF	80 PSF
SEE SHUTTER ELEVATIONS ON SHEET 9 & STORM BAR LOAD TABLES ON SHEETS 10 FOR LOADS AS CONTROLLED BY SHUTTER SPAN & STORM BAR SPACING.	

ARM SPACING TABLE	
SHUTTER HEIGHT	MAXIMUM SPACING
48" OR LESS	56"
49" < h < 60"	45"
61" < h < 72"	38"
73" < h < 84"	32"
85" < h < 96"	28"
VALUES IN THIS TABLE ARE BASED ON PRESSURES RESULTING FROM WIND SPEEDS UP TO 75 MPH	

NOTE: ALL 2 PANEL SHUTTERS REQUIRE JUST 1 ARM AT EACH SIDE!!

NOTE: THE NUMBER OF PANELS IS GOVERNED BY:
1. IF STORM BARS ARE REQUIRED. ANY NUMBER OF PANELS MAY BE USED PROVIDING THE OVERALL SHUTTER WIDTH DOES NOT EXCEED 112" & THE PANEL WIDTHS DO NOT EXCEED 28".
2. IF NO STORM BARS ARE REQUIRED, ANY NUMBER OF PANELS MAY BE USED & THE SHUTTER OVERALL WIDTH MAY BE INFINATE PROVIDING THE PANEL WIDTHS DO NOT EXCEED 28".

STORM BAR NOTE: THE NUMBER OF STORM BARS REQUIRED WITH EACH SHUTTER TYPICALLY VARIES FROM 1 TO 3 & IS DEPENDENT ON SHUTTER SIZE & REQUIRED DESIGN PRESSURE. SEE ELEVATION SKETCHES & LOAD TABLES ON SHEETS 9 & 10 FOR STORM BAR REQUIREMENTS.

APPROVED AS COMPLYING WITH THE SOUTH FLORIDA BUILDING CODE
DATE 11/15/2001
BY
PRODUCT CONTROL DIVISION
BUILDING CODE COMPLIANCE OFFICE
ACCEPTANCE NO. 01-0216.03

GENERAL NOTES:

1. ALL ALUMINUM EXTRUSIONS SHALL BE 6063-T5 ALLOY UNLESS SHOWN OTHERWISE ON THESE DRAWINGS.
2. IT SHALL BE THE RESPONSIBILITY OF THE PERMIT HOLDER TO VERIFY THE STRUCTURAL INTEGRITY OF THE EXISTING STRUCTURE TO SUPPORT THE LOADS SUPERIMPOSED BY THE SHUTTERS.
3. THESE SHUTTER SYSTEMS ARE DESIGNED TO WITHSTAND WIND PRESSURES, IN THE OPEN POSITION, RESULTING FROM WIND SPEEDS UP TO 75 MPH IN ACCORDANCE WITH THE SOUTH FLORIDA BUILDING CODE 1994 EDITION (THE SHUTTER MUST BE CLOSED WHEN WIND SPEEDS ARE IN EXCESS OF 75 MPH). WHEN CLOSED, THE OWNER SHALL BE RESPONSIBLE FOR SECURING THE SHUTTER AS REQ'D.
4. THESE SHUTTER SYSTEMS HAVE BEEN DESIGNED & TESTED IN ACCORDANCE WITH THE SOUTH FLORIDA BUILDING CODE 1994 EDITION AND DADE COUNTY PROTOCALS PA-201, 202 & 203.
5. EACH SHUTTER SHALL HAVE A LEGABLE & READILY VISIBLE MARKING INSTRUCTING THE OWNER/TENNANT TO SECURE THE SHUTTER WITH BRACKETS & STORM BARS, PER THESE APPROVED DRAWINGS, DURING PERIODS OF HURRICANE WARNINGS.
6. EACH SHUTTER ASSEMBLY SHALL BE PERMANENTLY LABELED AS FOLLOWS:
   FOLDING SHUTTER CORPORATION
   WEST PALM BEACH, FLORIDA
   MIAMI-DADE COUNTY PRODUCT CONTROL APPROVED
7. ALL CONCRETE SUBSTRATE SHALL BE MIN. 3000 PSI.
8. ALL WOOD SUBSTRATE SHALL HAVE MIN. G = 0.55 DENSITY.
9. SHUTTERS MUST BE PLACED SUCH THAT THE MINIMUM DISTANCE BETWEEN THE SHUTTER AND THE GLASS IT PROTECTS IS 3.25".

DRAWN BY: W.W.S	CHECKED BY: W.W.S
PLOT: 1-24	DATE: 12/08/00

NO.	REVISION DESCRIPTION	BY	DATE

DRAWING TITLE: IMPACT BAHAMA SHUTTER (DADE)

MANUFACTURER: FOLDING SHUTTER CORPORATION
7089 HEMSTREET PLACE
WEST PALM BEACH, FLORIDA 33413
561-683-4811

CONSULTANTS: W. W. SCHAEFER ENGINEERING & CONSULTING, P.A.
600 SANDTREE DRIVE, SUITE 203B
PALM BEACH GARDENS, FL 33403
PHONE: 561-775-4902 FAX: 561-775-4903

CERTIFICATION
OCT 22 2001
WARREN W. SCHAEFER, P.E.
P.E. NO. 44135

DRAWING NO. 1018 REV.

SHEET NO. 1 OF 10

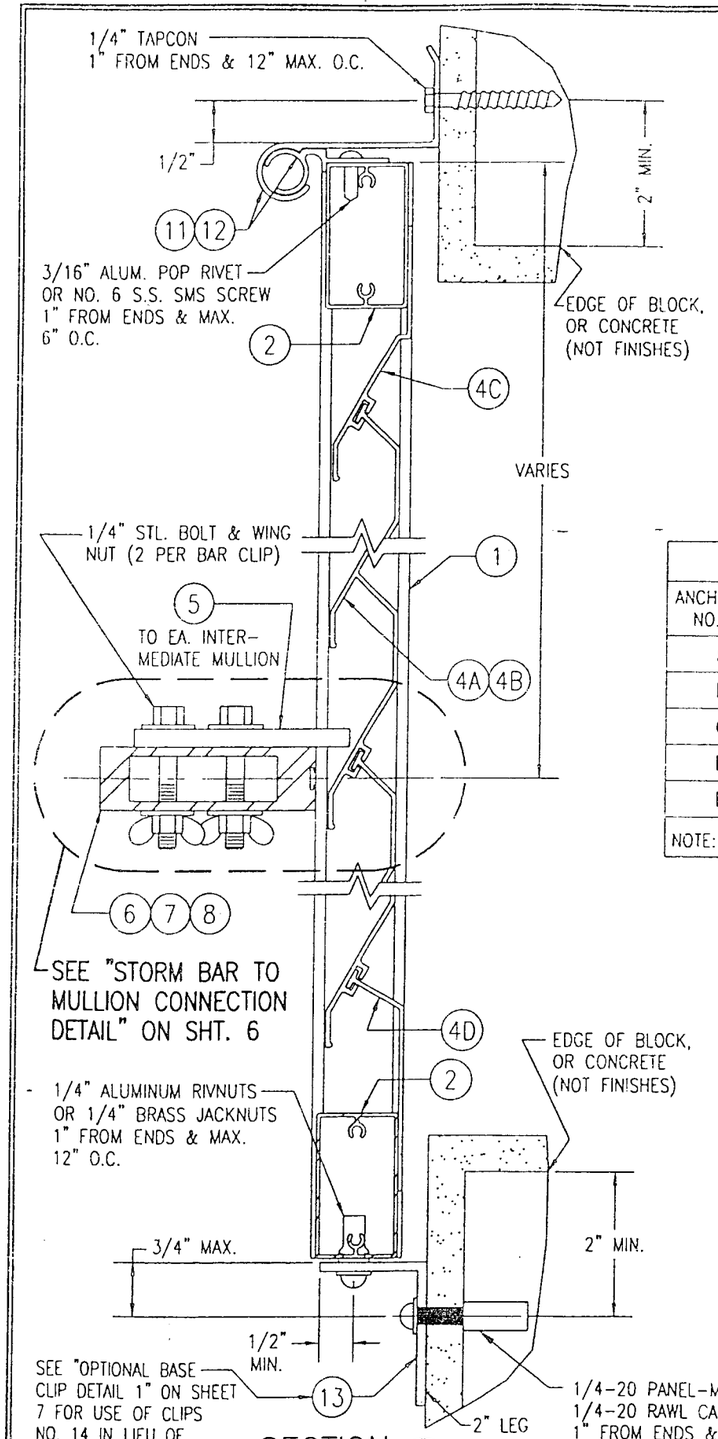

SECTION A/2
SCALE: 1/2 FULL
(FACE MOUNT ONTO BLOCK/CONCRETE)

ANCHOR SCHEDULE				
ANCHOR NO.	ANCHOR TYPE	SUBSTRATE	MINIMUM EMBEDMENT	MINIMUM EDGE DIST.
A	NO. 12 S.S. SMS SCREW	WOOD	1 1/2"	3/4"
B	1/4" TAPCON	CONCRETE/BLOCK	1 3/4"	3"
C	1/4-20 RAWL CAULK-IN	CONCRETE/BLOCK	7/8"	3"
D	1/4-20 PANELMATE (MALE OR FEMALE)	WOOD	1 7/8"	3/4"
E	1/4-20 PANELMATE (MALE OR FEMALE)	CONCRETE/BLOCK	1 1/4"	3"
NOTE: 1/4" STL. OR S.S. BOLTS SHALL BE USED WITH ANCHORS C, D & E.				

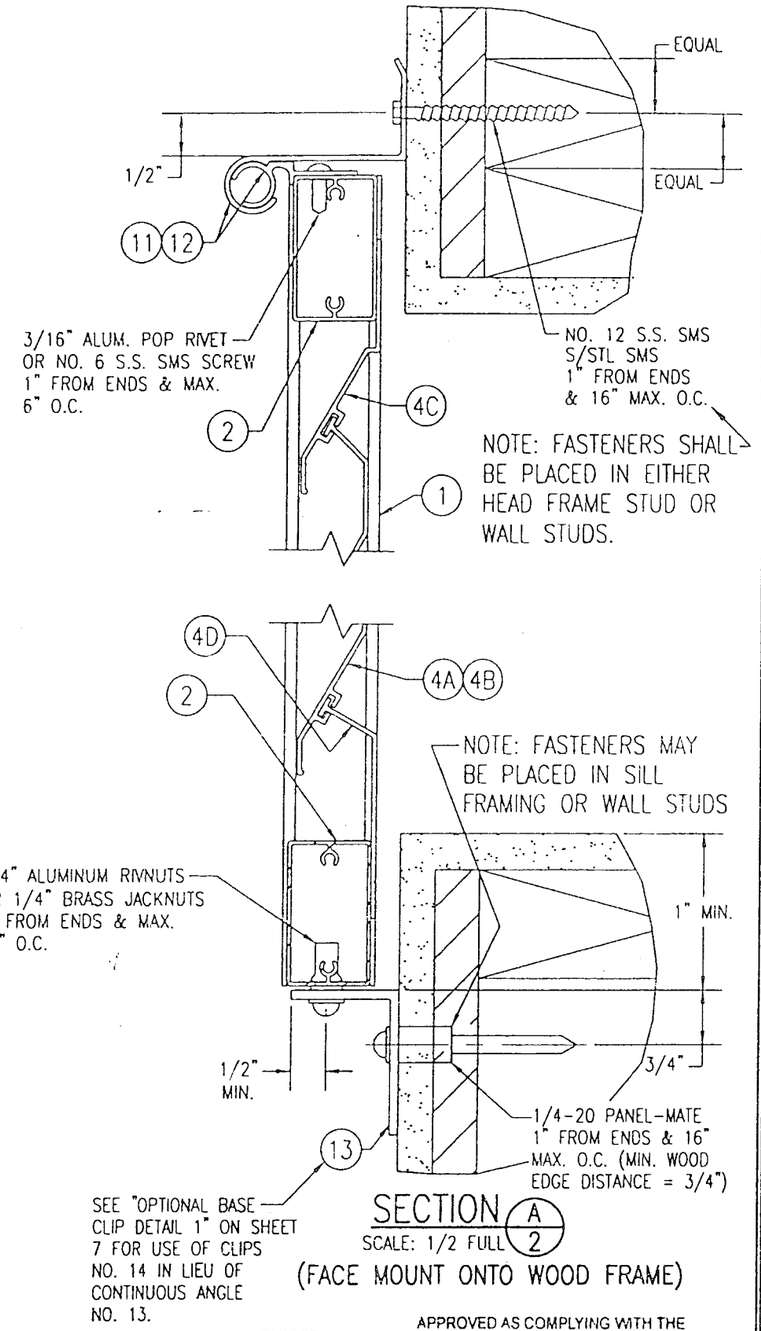

SECTION A/2
SCALE: 1/2 FULL
(FACE MOUNT ONTO WOOD FRAME)

PRODUCT REVISED
as complying with the Florida Buiding Code
Acceptance No 02-0409.02
Expiration Date Nov. 15-2006
By
Miami Dade Product Control Division

APPROVED AS COMPLYING WITH THE SOUTH FLORIDA BUILDING CODE
DATE 11/15/2001
BY
PRODUCT CONTROL DIVISION
BUILDING CODE COMPLIANCE OFFICE
ACCEPTANCE NO 01-0216.03

DRAWN BY: W.W.S.	CHECKED BY: W.W.S.
PLOT: 1=2	DATE: 12/08/00

NO.	REVISION DESCRIPTION	BY	DATE

DRAWING TITLE
IMPACT BAHAMA SHUTTER (DADE)

MANUFACTURER
FOLDING SHUTTER CORPORATION
7089 HEMSTREET PLACE
WEST PALM BEACH, FLORIDA 33413
561-683-4811

CONSULTANTS
W. W. SCHAEFER ENGINEERING & CONSULTING, P.A.
600 SANDTREE DRIVE; SUITE 203B
PALM BEACH GARDENS, FL 33403
PHONE: 561-775-4902 FAX: 561-775-4903

CERTIFICATION
OCT 22 2001
WARREN W. SCHAEFER, P.E.
P.E. NO. 44135

DRAWING NO. 1018
REV.
SHEET NO. 2 OF 10

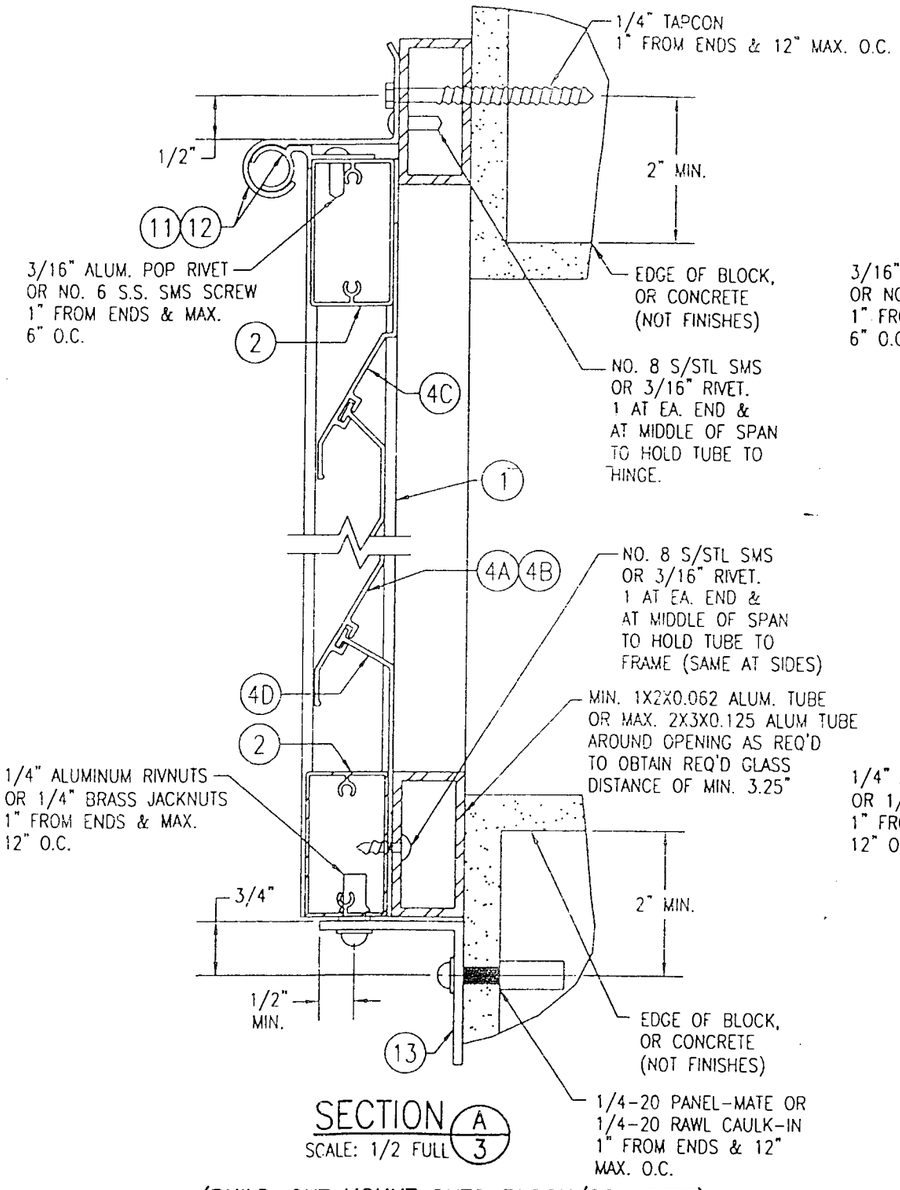

SECTION A/3
SCALE: 1/2 FULL

(BUILD-OUT MOUNT ONTO BLOCK/CONCRETE)

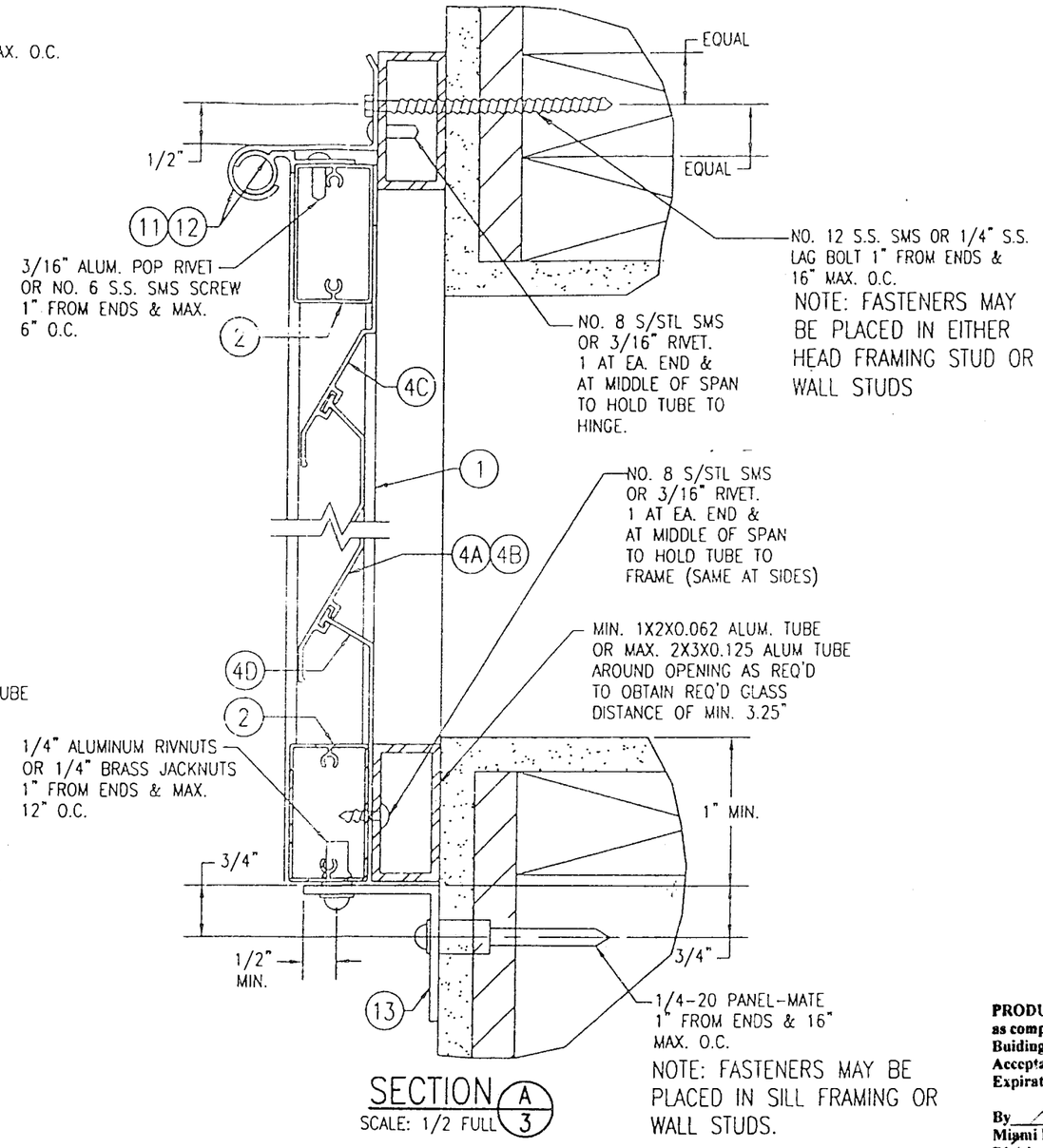

SECTION A/3
SCALE: 1/2 FULL

(BUILD-OUT MOUNT ONTO WOOD FRAME)

FOR FASTENER EDGE DISTANCE & SPACING REQUIREMENTS, SEE SHEET 2.

PRODUCT REVISED
as complying with the Florida Buiding Code
Acceptance No 02-0409.02
Expiration Date Nov 15 - 2006

By _____
Miami Dade Product Control Division

APPROVED AS COMPLYING WITH THE SOUTH FLORIDA BUILDING CODE
DATE 11/15/2001
BY _____
PRODUCT CONTROL DIVISION
BUILDING CODE COMPLIANCE OFFICE
ACCEPTANCE NO. 01-0216.03

DRAWN BY: W.W.S.	CHECKED BY: W.W.S.
PLOT: 1=2	DATE: 12/06/00

NO.	REVISION DESCRIPTION	BY	DATE

DRAWING TITLE
IMPACT BAHAMA SHUTTER (DADE)

MANUFACTURER
FOLDING SHUTTER CORPORATION
7089 HEMSTREET PLACE
WEST PALM BEACH, FLORIDA 33413
561-683-4811

CONSULTANTS
W. W. SCHAEFER ENGINEERING & CONSULTING, P.A.
600 SANOTREE DRIVE, SUITE 203B
PALM BEACH GARDENS, FL 33403
PHONE: 561-775-4902 FAX: 561-775-4903

CERTIFICATION
OCT 22 2001
WARREN W. SCHAEFER, P.E.
P.E. NO. 44135

DRAWING NO. 1018
REV.

SHEET NO. 3 OF 10

NOTE:
THE ARMS MAY BE MOUNTED ON THE WALL ABOVE THE SILL LEVEL PROVIDING THE ARMS ANGLE TO THE HORIZONTAL DOES NOT EXCEED 30 DEGREES.

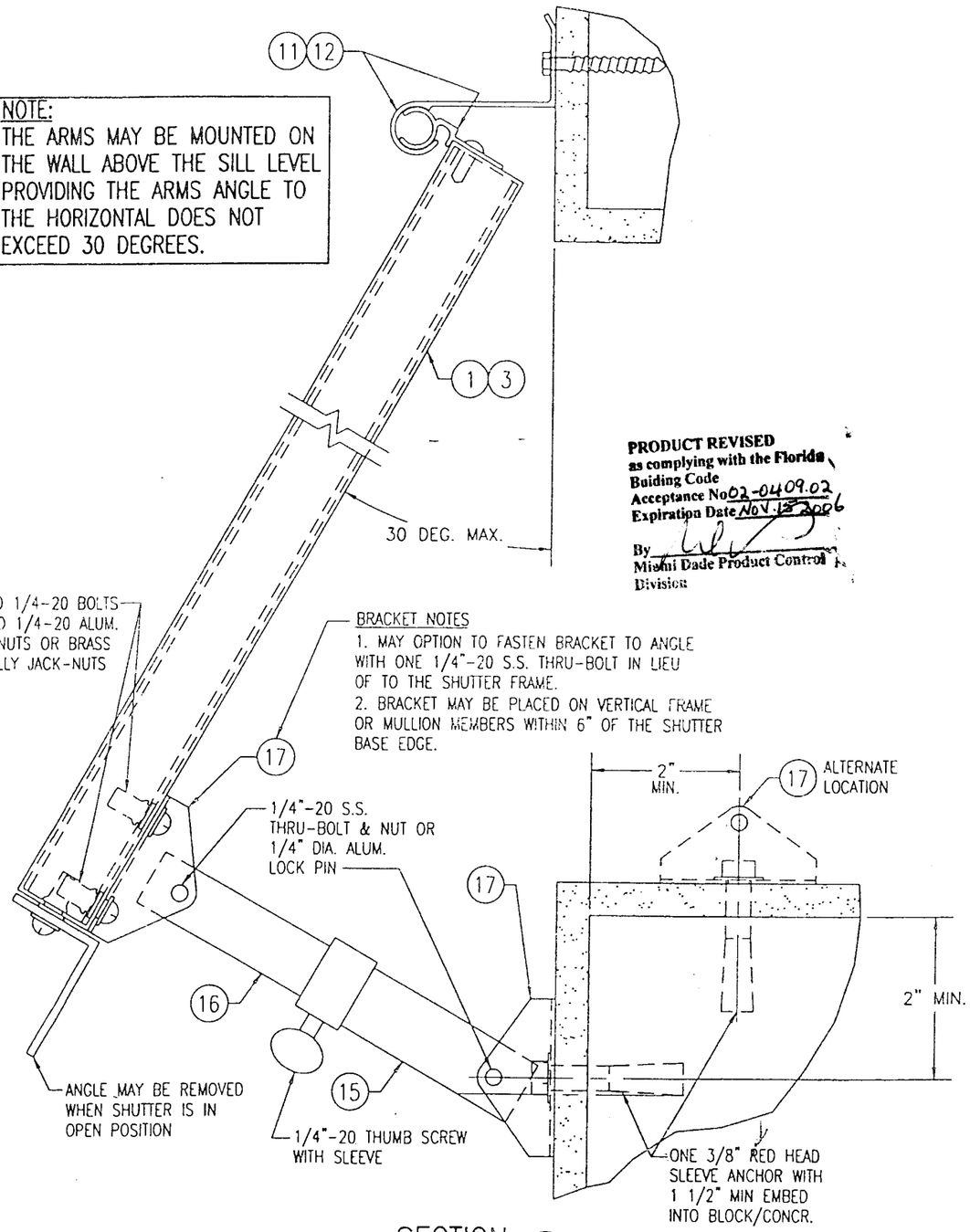

BRACKET NOTES
1. MAY OPTION TO FASTEN BRACKET TO ANGLE WITH ONE 1/4"-20 S.S. THRU-BOLT IN LIEU OF TO THE SHUTTER FRAME.
2. BRACKET MAY BE PLACED ON VERTICAL FRAME OR MULLION MEMBERS WITHIN 6" OF THE SHUTTER BASE EDGE.

PRODUCT REVISED
as complying with the Florida Buiding Code
Acceptance No 02-0409.02
Expiration Date NOV. 13 2006
By
Miami Dade Product Control Division

SECTION B/4
SCALE: 1/2 FULL
(OPEN SHUTTER AT FACE MOUNT CONDITION TO BLOCK/CONCRETE)
SEE "ARM SPACING TABLE" ON SHEET 1 FOR SPACING OF ARMS

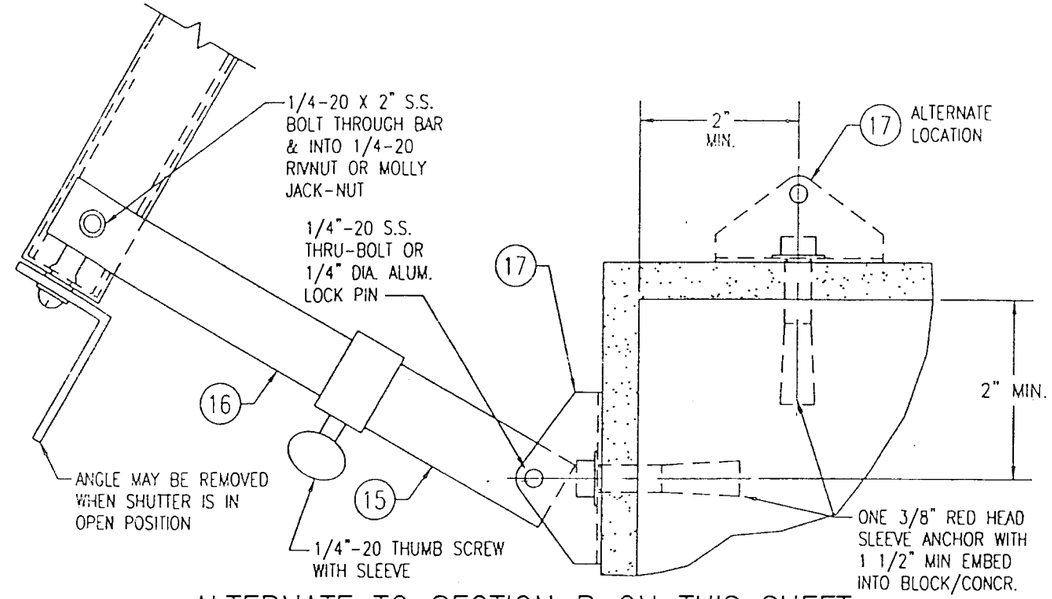

ALTERNATE TO SECTION B ON THIS SHEET
(END ARMS ONLY)

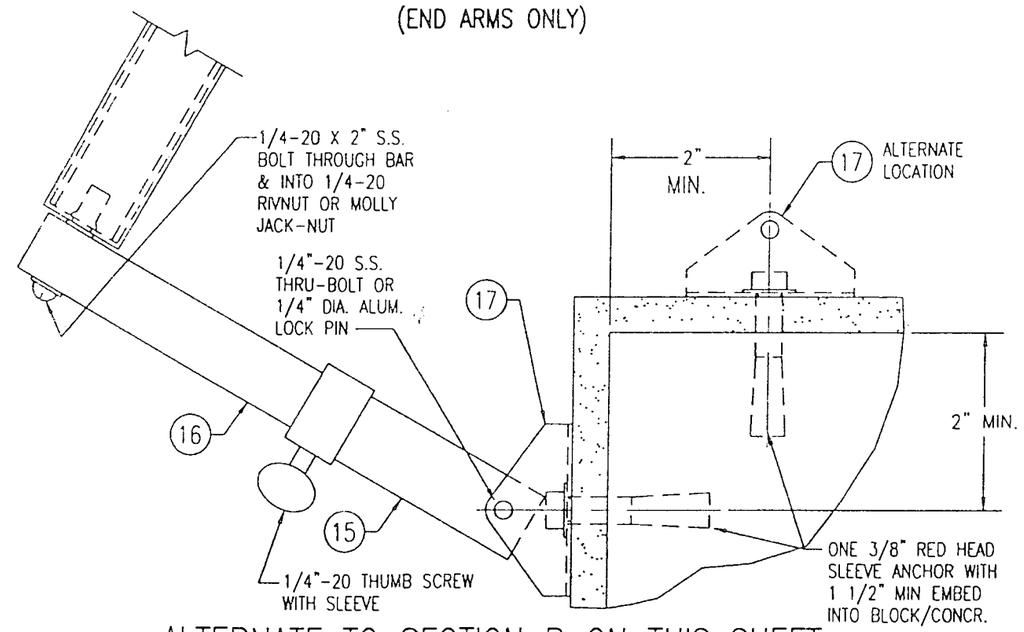

ALTERNATE TO SECTION B ON THIS SHEET

FOR FASTENER EDGE DISTANCE & SPACING REQUIREMENTS, SEE SHEET 2.

APPROVED AS COMPLYING WITH THE SOUTH FLORIDA BUILDING CODE
DATE 11/15/2001
BY
PRODUCT CONTROL DIVISION
BUILDING CODE COMPLIANCE OFFICE
ACCEPTANCE NO 01-0216.03

DRAWN BY: W.W.S.	CHECKED BY: W.W.S.
PLOT: 1-2	DATE: 12/08/00

NO.	REVISION DESCRIPTION	BY	DATE

(DADE)

MANUFACTURER
FOLDING SHUTTER CORPORATION
7089 HEMSTREET PLACE
WEST PALM BEACH, FLORIDA 33413
561-683-4811

DRAWING TITLE
IMPACT BAHAMA SHUTTER

CONSULTANTS
W. W. SCHAEFER ENGINEERING & CONSULTING, P.A.
600 SANDTREE DRIVE, SUITE 203B
PALM BEACH GARDENS, FL 33403
PHONE: 561-775-4902 FAX: 561-775-4903

CERTIFICATION
OCT 22 2001
WARREN W. SCHAEFER, P.E.
P.E. NO. 44135

DRAWING NO. 1018
REV.

SHEET NO. 4 OF 10

NOTE:
THE ARMS MAY BE MOUNTED ON THE WALL ABOVE THE SILL LEVEL PROVIDING THE ARMS ANGLE TO THE HORIZONTAL DOES NOT EXCEED 30 DEGREES.

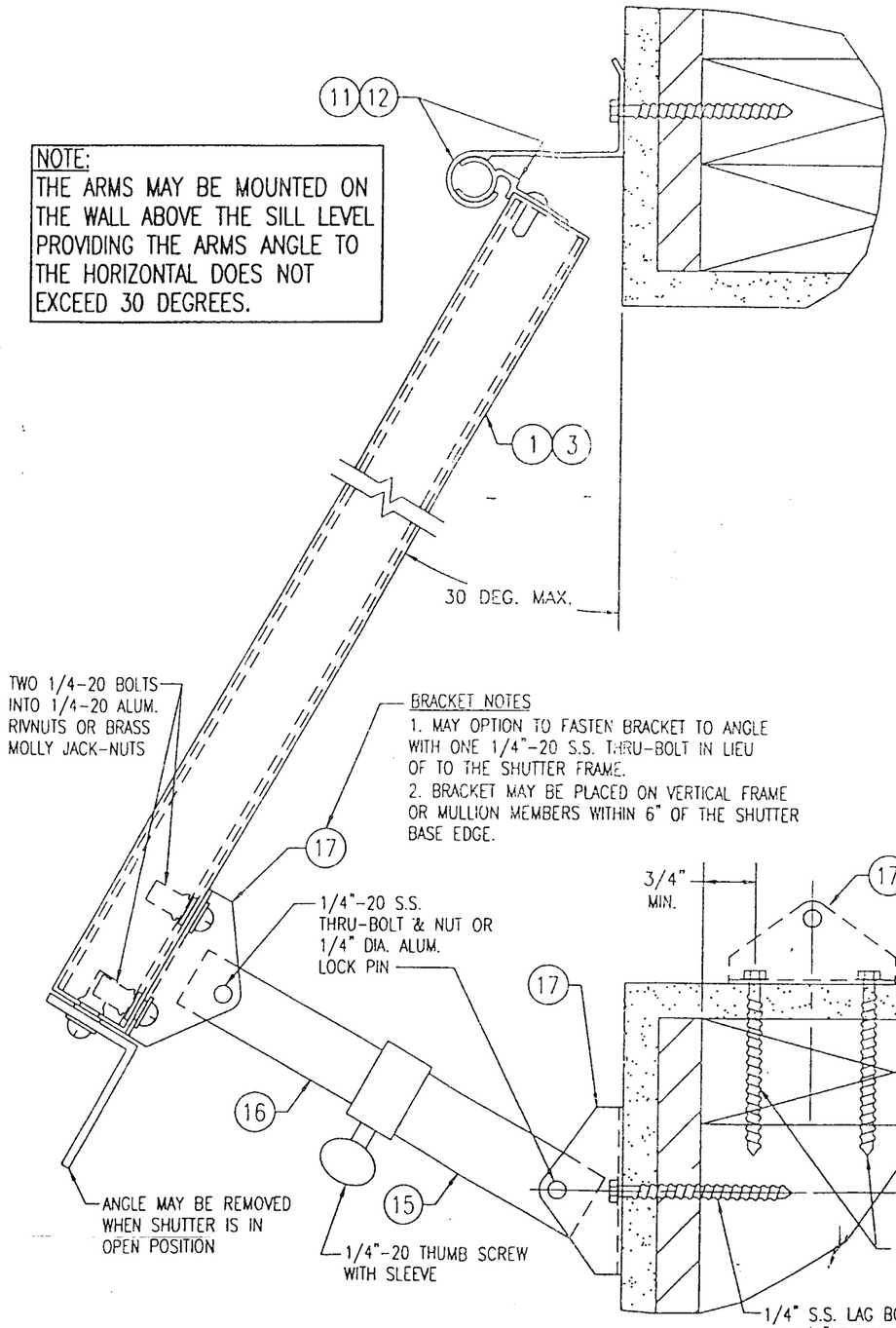

BRACKET NOTES
1. MAY OPTION TO FASTEN BRACKET TO ANGLE WITH ONE 1/4"-20 S.S. THRU-BOLT IN LIEU OF TO THE SHUTTER FRAME.
2. BRACKET MAY BE PLACED ON VERTICAL FRAME OR MULLION MEMBERS WITHIN 6" OF THE SHUTTER BASE EDGE.

SECTION B/5
SCALE: 1/2 FULL
(OPEN SHUTTER AT FACE MOUNT CONDITION TO WOOD FRAMING)
SEE "ARM SPACING TABLE" ON SHEET 1 FOR SPACING OF ARMS

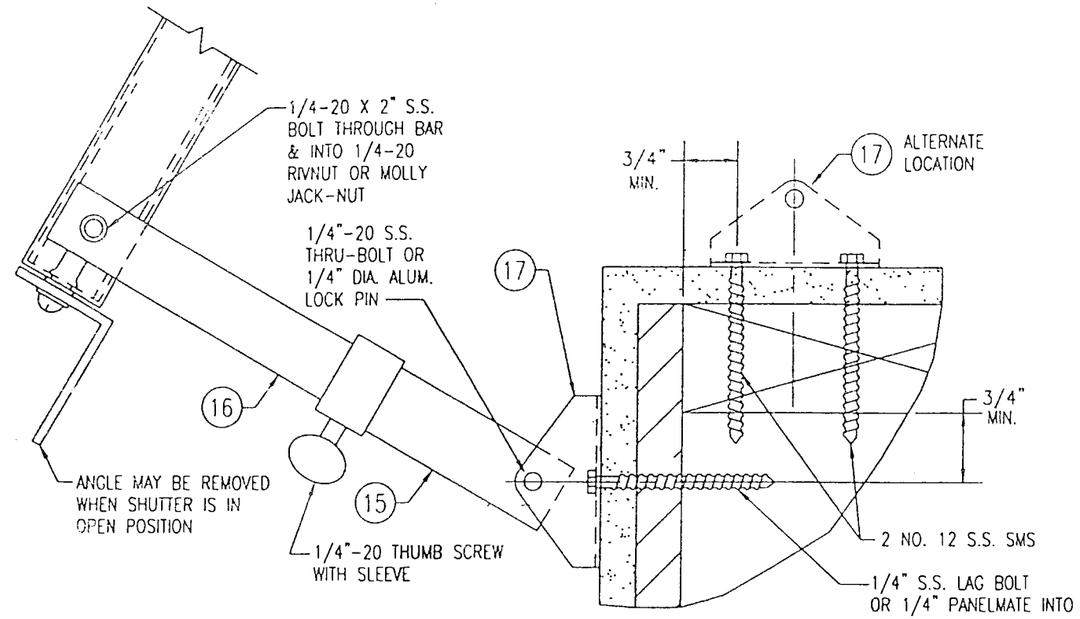

ALTERNATE TO SECTION B ON THIS SHEET
(END ARMS ONLY)

PRODUCT REVISED
as complying with the Florida Buiding Code
Acceptance No. 02-0409.02
Expiration Date NOV. 15, 2006
By
Miami Dade Product Control Division

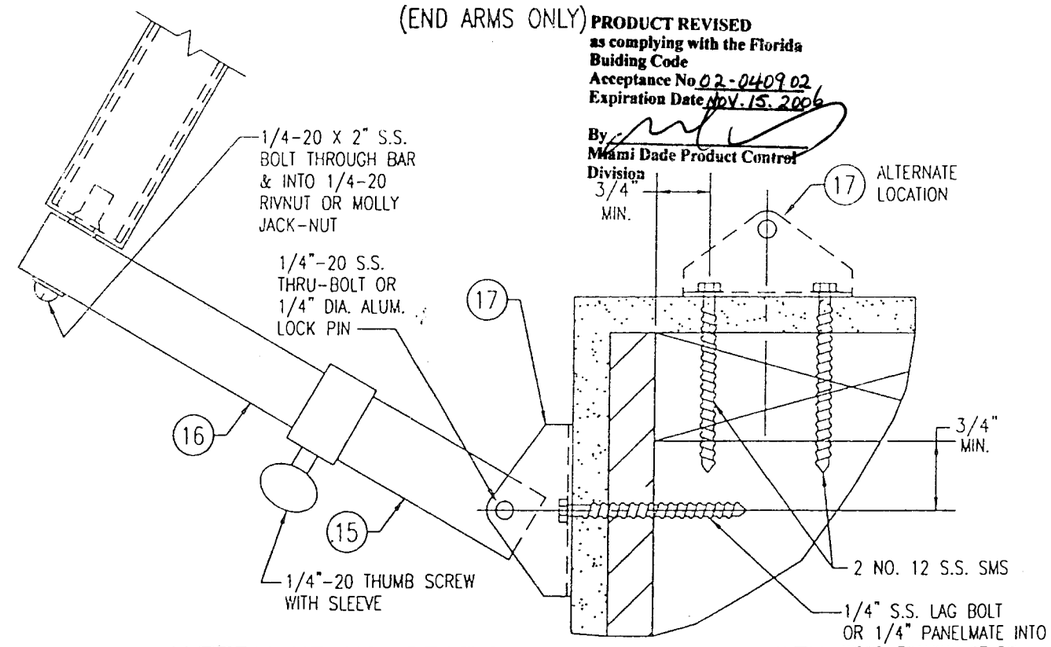

ALTERNATE TO SECTION B ON THIS SHEET

FOR FASTENER EDGE DISTANCE & SPACING REQUIREMENTS, SEE SHEET 2.

APPROVED AS COMPLYING WITH THE SOUTH FLORIDA BUILDING CODE
DATE 11/15/2001
BY
PRODUCT CONTROL DIVISION
BUILDING CODE COMPLIANCE OFFICE
ACCEPTANCE NO. 01-0216.03

DRAWN BY: W.W.S.	CHECKED BY: W.W.S.
PLOT: 1-2	DATE: 12/06/00

NO.	REVISION DESCRIPTION	BY	DATE

DRAWING TITLE
IMPACT BAHAMA SHUTTER (DADE)

MANUFACTURER
FOLDING SHUTTER CORPORATION
7089 HEMSTREET PLACE
WEST PALM BEACH, FLORIDA 33413
561-683-4811

CONSULTANTS
W. W. SCHAEFER ENGINEERING & CONSULTING, P.A.
500 SANDTREE DRIVE, SUITE 203B
PALM BEACH GARDENS, FL 33403
PHONE: 561-775-4902 FAX: 561-775-4903

CERTIFICATION
OCT 22 2001
WARREN W. SCHAEFER, P.E.
P.E. NO. 44135

DRAWING NO. 1018
REV.
SHEET NO. 5 OF 10

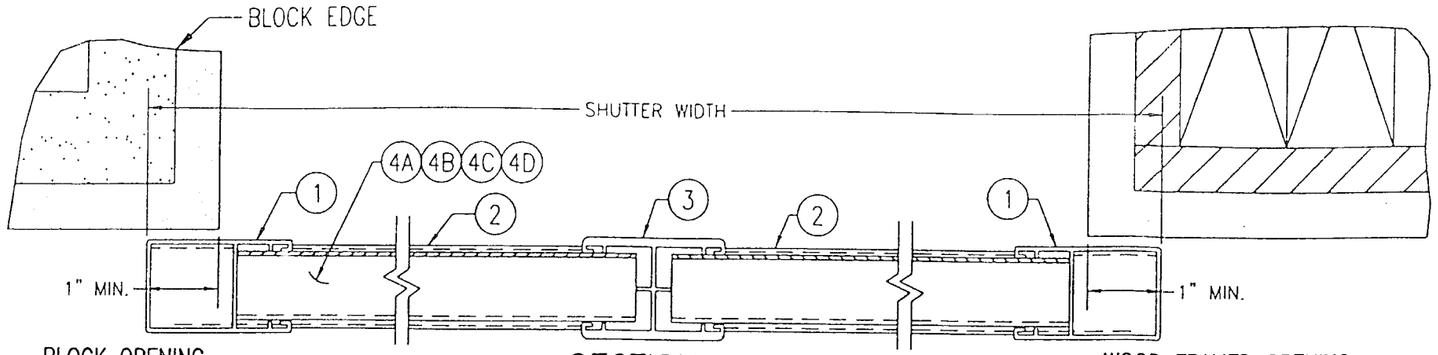

SECTION C/6 FLUSH MOUNT
SCALE: 1/2 FULL

STORM BAR & ARMS NOT SHOWN FOR CLARITY!
3 & 4 PANEL SHUTTERS SIMILAR

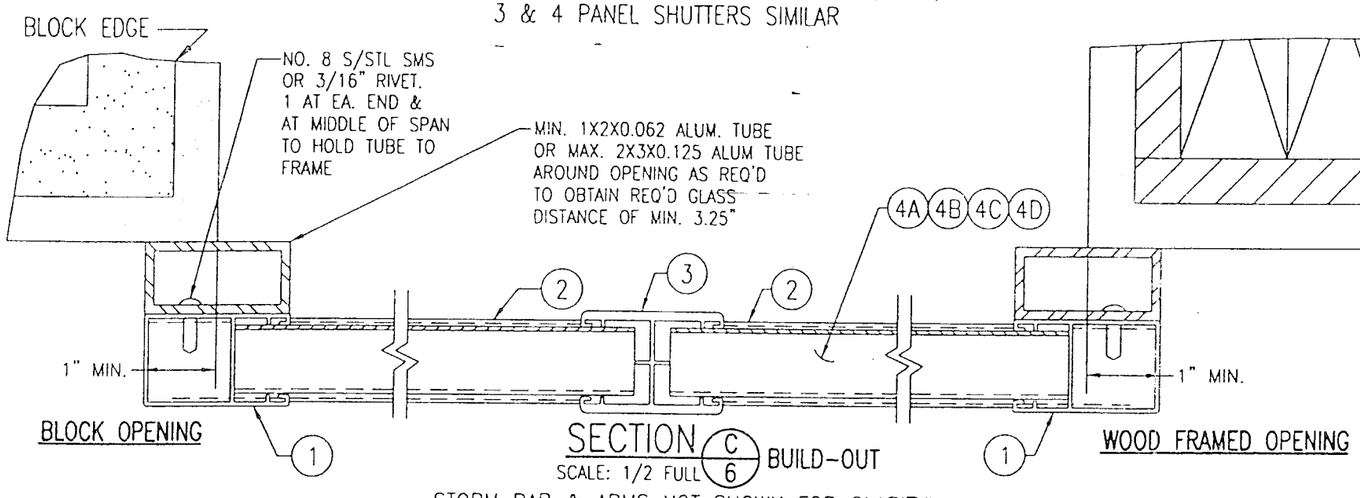

SECTION C/6 BUILD-OUT
SCALE: 1/2 FULL

STORM BAR & ARMS NOT SHOWN FOR CLARITY!
3 & 4 PANEL SHUTTERS SIMILAR

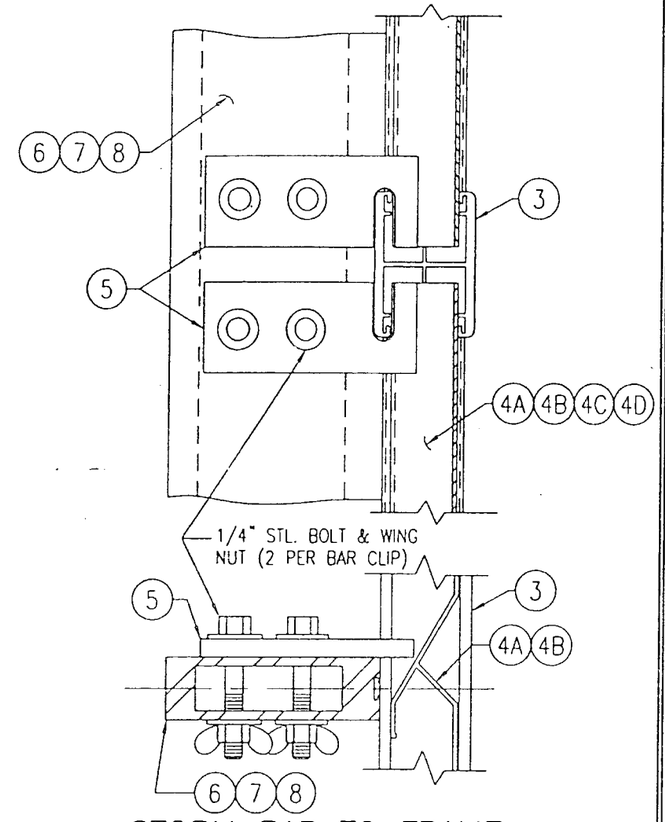

STORM BAR TO FRAME CONNECTION DETAIL
SCALE: 1/2 FULL

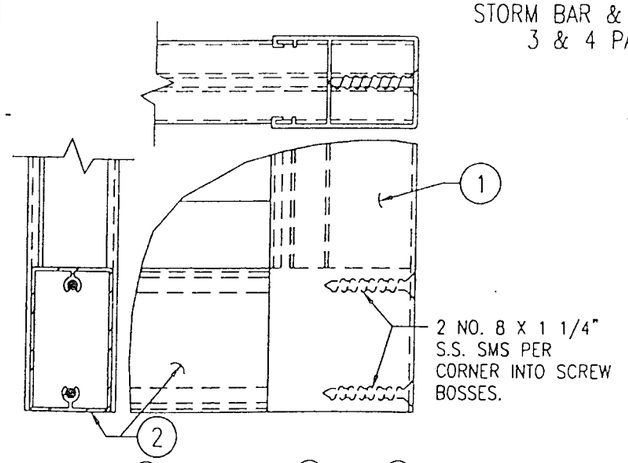

GUT OUT 1 AND PROJECT 2 INTO 1

FRAME CORNER DETAIL
SCALE: 1/2 FULL SIZE

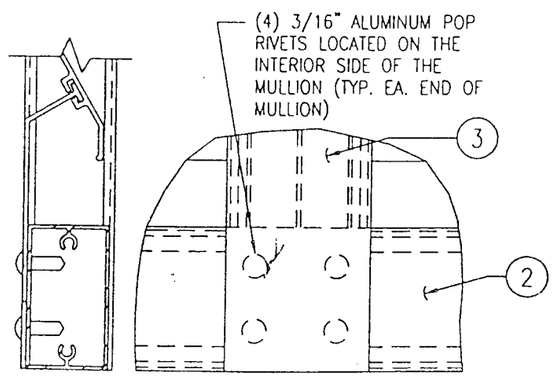

GUT OUT 3 AND PROJECT 3 OVER 2

MULLION END DETAIL
SCALE: 1/2 FULL SIZE

PRODUCT REVISED
as complying with the Florida Buiding Code
Acceptance No 02-0409.02
Expiration Date Nov. 15. 2006
By
Miami Dade Product Control Division

APPROVED AS COMPLYING WITH THE SOUTH FLORIDA BUILDING CODE
DATE 11/15/2001
BY
PRODUCT CONTROL DIVISION
BUILDING CODE COMPLIANCE OFFICE
ACCEPTANCE NO. 01-0216.03

DRAWN BY: W.W.S.	CHECKED BY: W.W.S.
PLOT: 1-2	DATE: 12/06/00

NO.	REVISION DESCRIPTION	BY	DATE

DRAWING TITLE: IMPACT BAHAMA SHUTTER

MANUFACTURER: FOLDING SHUTTER CORPORATION
7089 HEMSTREET PLACE
WEST PALM BEACH, FLORIDA 33413
561-683-4811

CONSULTANTS: W. W. SCHAEFER ENGINEERING & CONSULTING, P.A.
600 SANDTREE DRIVE, SUITE 203B
PALM BEACH GARDENS, FL 33403
PHONE: 561-775-4902 FAX: 561-775-4903

CERTIFICATION
OCT 22 2001
WARREN W. SCHAEFER, P.E.
P.E. NO. 44135

DRAWING NO. 1018 REV.

SHEET NO. 6 OF 10

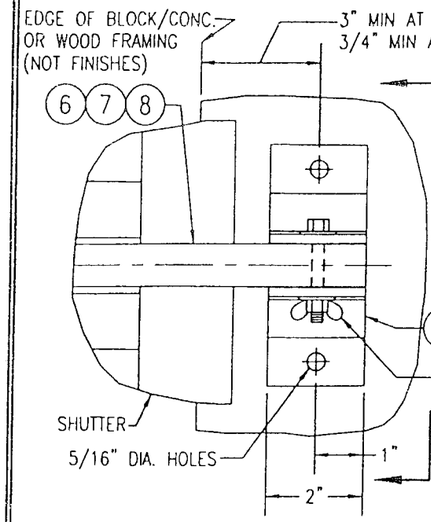

STORM BAR END CONNECTION "A"

SCALE: 1/3 FULL SIZE

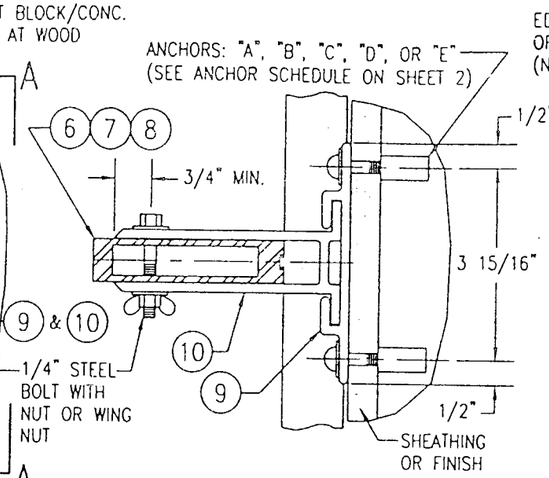

SECTION 'A–A"

SCALE: 1/3 FULL SIZE

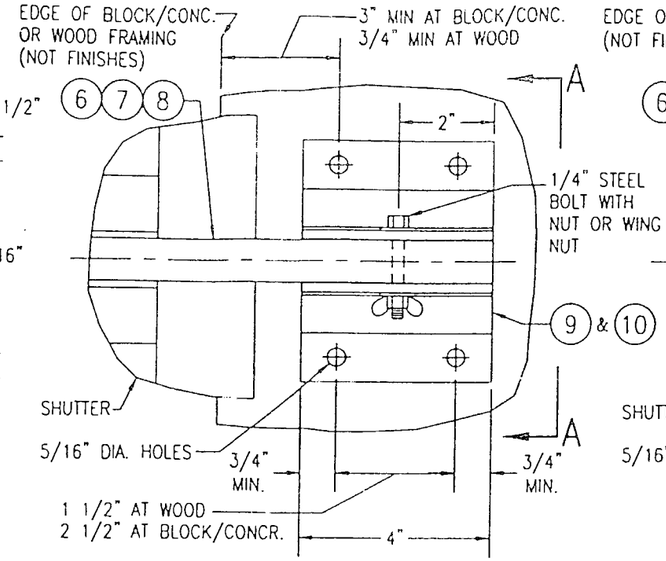

STORM BAR END CONNECTION "C"

SCALE: 1/3 FULL SIZE

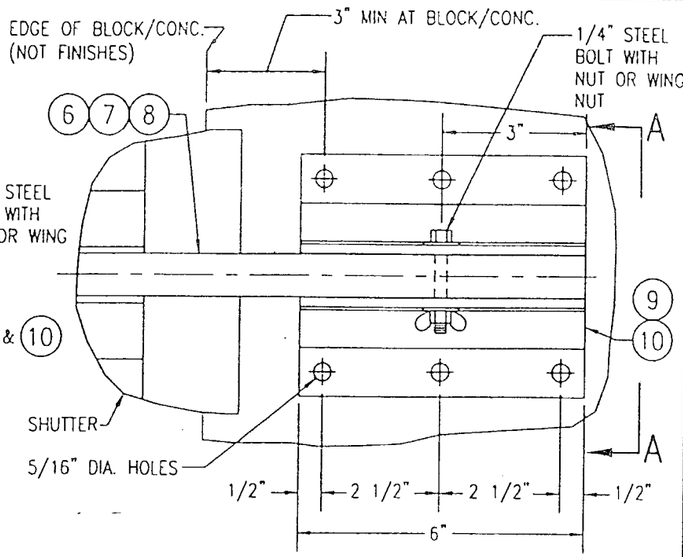

STORM BAR END CONNECTION "D"

SCALE: 1/3 FULL SIZE

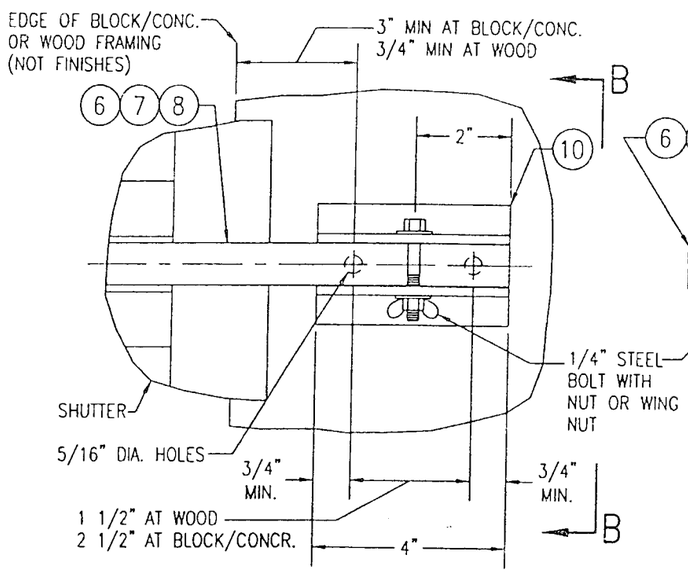

STORM BAR END CONNECTION "B"

SCALE: 1/3 FULL SIZE

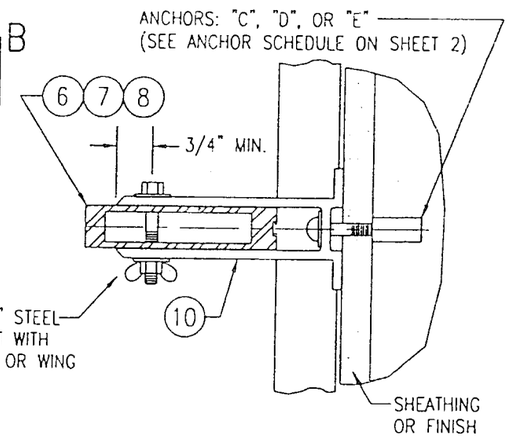

SECTION 'B–B"

SCALE: 1/3 FULL SIZE

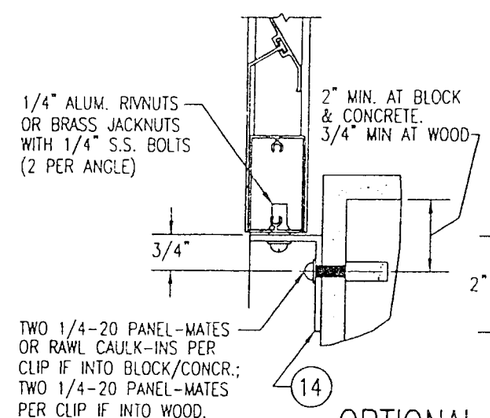

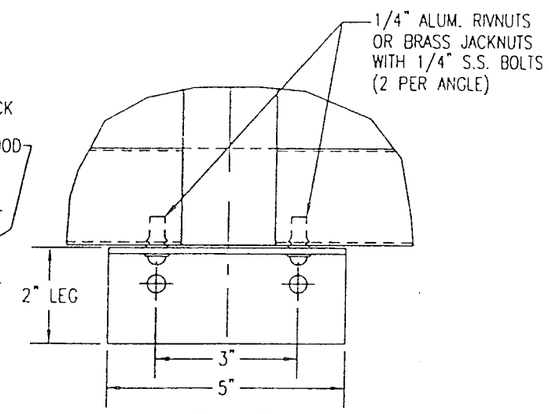

OPTIONAL BASE CLIP DETAIL 1

NOTE: WHEN CLIPS ARE ATTACHED TO WOOD, THE WOOD MEMBER SHALL BE A CONTINUOUS WOOD FRAMING SILL MEMBER.

PLACE 1 CLIP AT EACH CORNER & MULLION LOCATION

PRODUCT REVISED
as complying with the Florida Buiding Code
Acceptance No 02-0409.02
Expiration Date NOV. 15, 2006
By _____
Miami Dade Product Control Division

APPROVED AS COMPLYING WITH THE SOUTH FLORIDA BUILDING CODE
DATE 11/15/2001
BY _____
PRODUCT CONTROL DIVISION
BUILDING CODE COMPLIANCE OFFICE
ACCEPTANCE NO 01-0216.03

NO.	REVISION DESCRIPTION	BY	DATE

DRAWN BY: W.W.S. | CHECKED BY: W.W.S.
PLOT: 1=3 | DATE: 12/06/00

DRAWING TITLE: IMPACT BAHAMA SHUTTER (DADE)

MANUFACTURER: FOLDING SHUTTER CORPORATION
7089 HEMSTREET PLACE
WEST PALM BEACH, FLORIDA 33413
561-683-4811

CONSULTANTS: W. W. SCHAEFER ENGINEERING & CONSULTING, P.A.
600 SANDTREE DRIVE, SUITE 203B
PALM BEACH GARDENS, FL 33403
PHONE: 561-775-4902 FAX: 561-775-4903

CERTIFICATION: OCT 22 2001
WARREN W. SCHAEFER, P.E.
P.E. NO. 44135

DRAWING NO. 1018 | REV.

SHEET NO. 7 OF 10

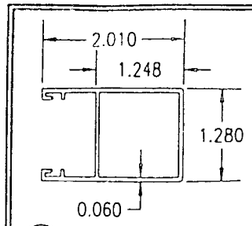

1 SIDE STILE
6063-T6 ALUMINUM

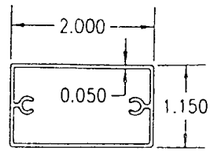

2 BOTTOM/TOP RAIL
6063-T6 ALUMINUM

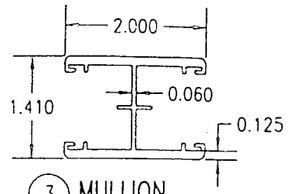

3 MULLION
6063-T6 ALUMINUM

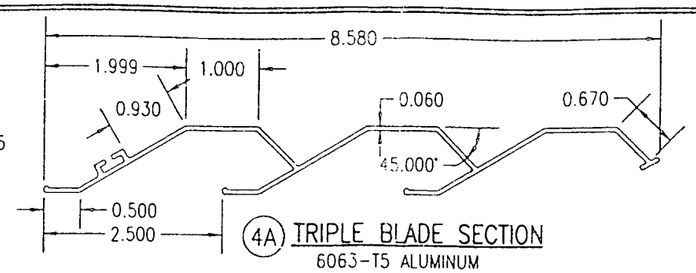

4A TRIPLE BLADE SECTION
6063-T5 ALUMINUM

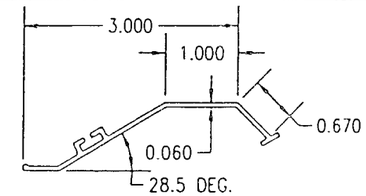

4B SINGLE BLADE SECTION
6063-T5 ALUMINUM

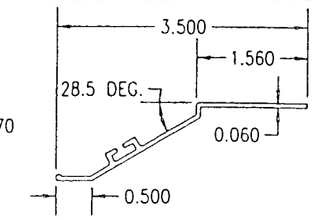

4C TOP BLADE SECTION
6063-T5 ALUMINUM

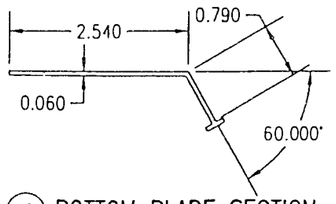

4D BOTTOM BLADE SECTION
6063-T5 ALUMINUM

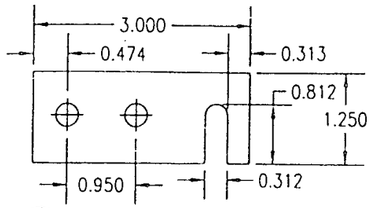

5 STORM BAR CLIP
1/4" THK. 6063-T6 ALUMINUM
OR 1/8" THK. A36 STL.

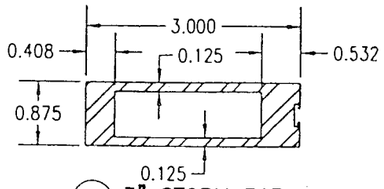

6 3" STORM BAR
6005-T5 ALUMINUM

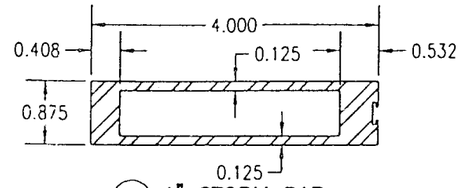

7 4" STORM BAR
6005-T5 ALUMINUM

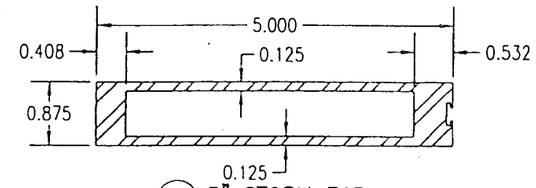

8 5" STORM BAR
6005-T5 ALUMINUM

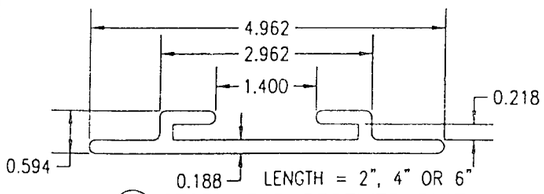

9 STORM BAR RECEIVER PLATE
6063-T6 ALUMINUM

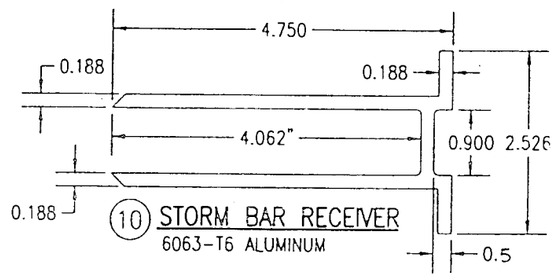

10 STORM BAR RECEIVER
6063-T6 ALUMINUM

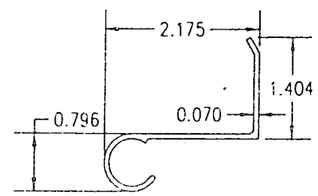

11 FEMALE HINGE
6063-T5 ALUMINUM

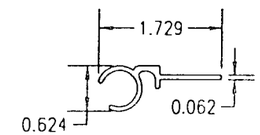

12 MALE HINGE
6063-T5 ALUMINUM

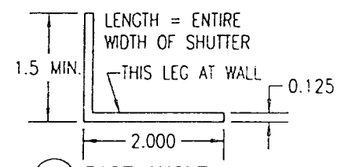

13 BASE ANGLE
6063-T5 ALUMINUM

MATERIAL LIST

NO.	DESCRIPTION	NOTES
1	SIDE STILE	
2	TOP & BOTTOM RAIL	
3	MULLION	
4A	TRIPLE BLADE SECTION	MAIN BLADE SECTION
4B	SINGLE BLADE SECTION	USED AS FILLER WHEN REQUIRED
4C	TOP SHUTTER BLADE	
4D	BOTTOM SHUTTER BLADE	
5	STORM BAR CLIP	SECURES STORM BAR TO SHUTTER PANEL FRAMES
6	3" STORM BAR	
7	4" STORM BAR	
8	5" STORM BAR	
9	STORM BAR RECEIVER PLATE	GRABS THE STORM BAR END CONNECTOR
10	STORM BAR RECEIVER	
11	FEMALE HINGE	
12	MALE HINGE	
13	CONTINUOUS BASE ANGLE	SHUTTER LEG LENGTH VARIES W/SHUTTER WALL OFFSET
14	OPTIONAL BASE ANGLE	PLACED AT MULLION & SIDE FRAME ENDS
15	OUTER ARM	POSITION PER DETAILS & SPACING TABLE
16	INNER ARM	POSITION PER DETAILS & SPACING TABLE
17	SHUTTER ARM SUPPORT BRACKET	ARM TO SHUTTER & WALL

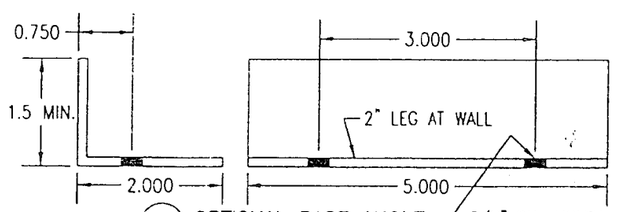

14 OPTIONAL BASE ANGLE
6063-T5 ALUMINUM

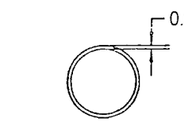

1" O.D. SERRATED TUBE

15 OUTSIDE ARM
6063-T6 ALUMINUM

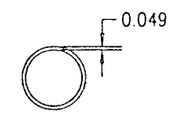

7/8" O.D. SERRATED TUBE

16 INSIDE ARM
6063-T6 ALUMINUM

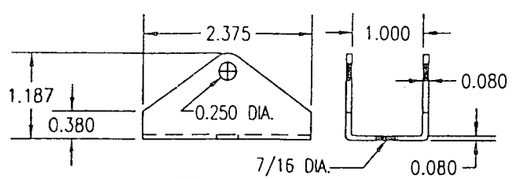

17 SUPPORT BRACKET
6063-T6 ALUMINUM

NOTE: ALL DETAILS ARE DRAWN TO 1/2 FULL SIZE UNLES NOTED OTHERWISE.

PRODUCT REVISED
as complying with the Florida Buiding Code
Acceptance No 02-0409.02
Expiration Date NOV. 15, 2006
By
Miami Dade Product Control Division

APPROVED AS COMPLYING WITH THE SOUTH FLORIDA BUILDING CODE
DATE 11/15/2001
BY
PRODUCT CONTROL DIVISION
BUILDING CODE COMPLIANCE OFFICE
ACCEPTANCE NO. 01-0216.03

DRAWN BY: W.W.S.	CHECKED BY: W.W.S.
PLOT: 1=2	DATE: 12/00/00

NO.	REVISION DESCRIPTION	BY	DATE

DRAWING TITLE
IMPACT BAHAMA SHUTTER (DADE)

MANUFACTURER
FOLDING SHUTTER CORPORATION
7089 HEMSTREET PLACE
WEST PALM BEACH, FLORIDA 33413
561-683-4811

CONSULTANTS
W. W. SCHAEFER ENGINEERING & CONSULTING, P.A.
600 SANDTREE DRIVE, SUITE 203B
PALM BEACH GARDENS, FL 33403
PHONE: 561-775-4902 FAX: 561-775-4903

CERTIFICATION
OCT 22 2001
WARREN W. SCHAEFER, P.E.
P.E. NO. 44135

DRAWING NO. 1018
REV.
SHEET NO. 8 OF 10

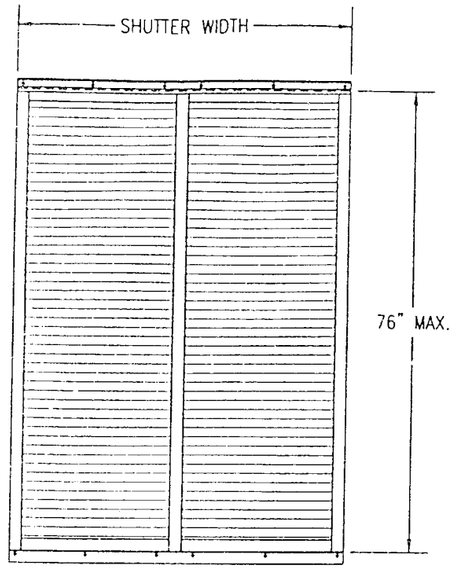

NO BARS
(SINGLE SPAN SHUTTER)

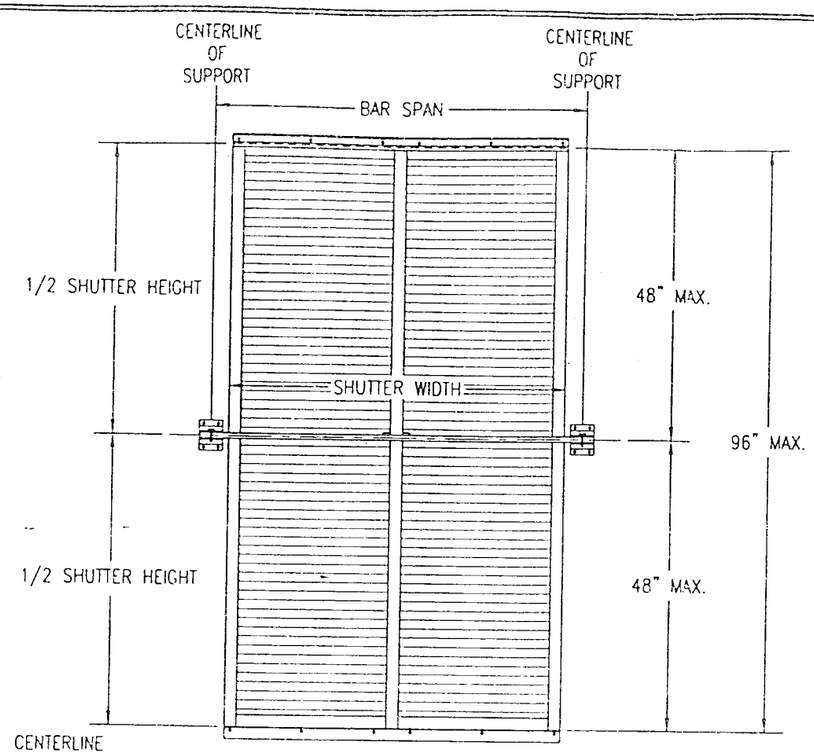

SINGLE BAR
(TWO SPAN SHUTTER)

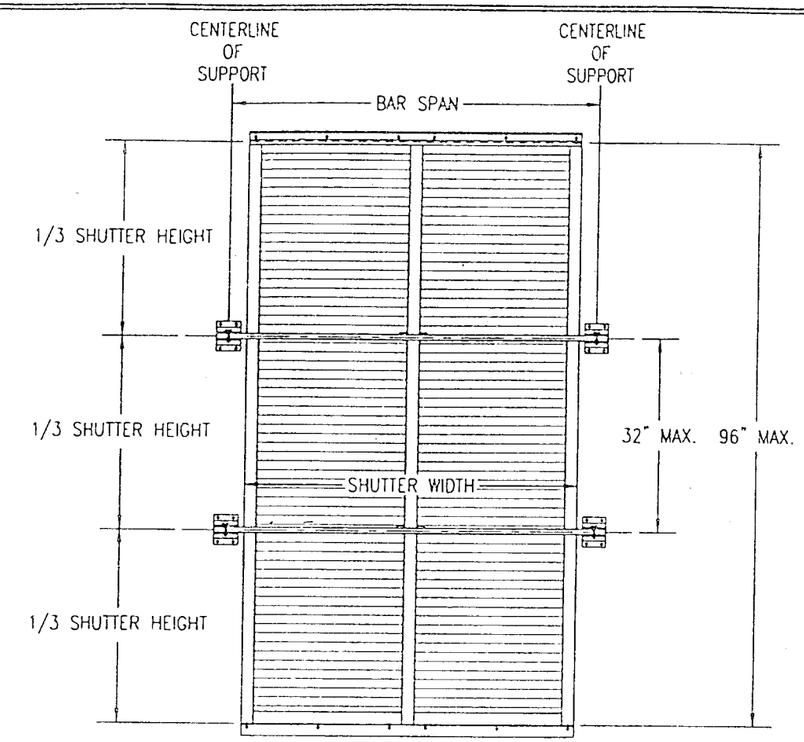

TWO BARS
(THREE SPAN SHUTTER)

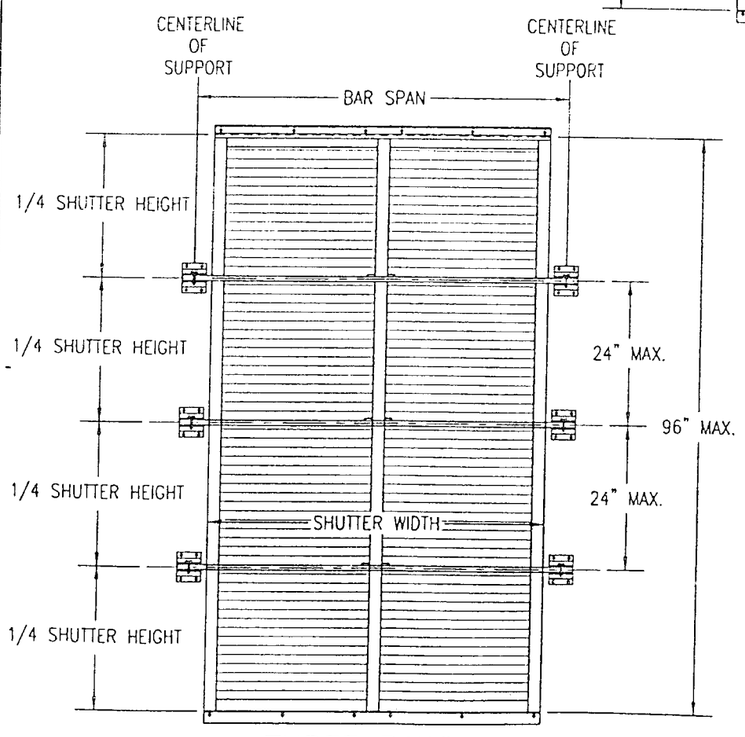

THREE BARS
(FOUR SPAN SHUTTER)

ALLOWABLE PRESSURE TABLE FOR SINGLE SPAN SHUTTERS (NO BARS)

SHUTTER HEIGHT	PRESSURE (PSF)	
	POS	NEG
58.5" & LESS	65.0	65.0
60"	65.0	65.0
62"	62.0	62.0
64"	58.2	58.2
66"	54.7	54.7
68"	51.6	51.6
70"	47.9	48.7
72"	42.8	46.0
74"	38.4	43.5
76"	34.5	40.0

NOTE:
1. ALL SHUTTERS MUST BE PLACED A MIN. DISTANCE OF 3.25" AWAY FROM THE GLASS.

PRODUCT REVISED
as complying with the Florida Buiding Code
Acceptance No 02-0409.02
Expiration Date NOV. 15. 2006
By
Miami Dade Product Control Division

APPROVED AS COMPLYING WITH THE SOUTH FLORIDA BUILDING CODE
DATE 11/15/2001
BY
PRODUCT CONTROL DIVISION
BUILDING CODE COMPLIANCE OFFICE
ACCEPTANCE NO. 01-0216.03

DRAWN BY: W.W.S.	CHECKED BY: W.W.S.
PLOT: 1=24	DATE: 12/08/00

NO.	REVISION DESCRIPTION	BY	DATE

DRAWING TITLE
IMPACT BAHAMA SHUTTER (DADE)

MANUFACTURER
FOLDING SHUTTER CORPORATION
7089 HEMSTREET PLACE
WEST PALM BEACH, FLORIDA 33413
561-683-4811

CONSULTANTS
W. W. SCHAEFER ENGINEERING & CONSULTING, P.A.
600 SANDTREE DRIVE, SUITE 203B
PALM BEACH GARDENS, FL 33403
PHONE: 561-775-4902 FAX: 561-775-4903

CERTIFICATION
OCT 22 2001
WARREN W. SCHAEFER, P.E.
P.E. NO. 44135

DRAWING NO. 1018
REV.
SHEET NO. 9 OF 10

PRESSURE LOAD TABLE FOR STORM BARS & BAR END CONNECTIONS

SHUTTER WIDTH (IN)	HEIGHT OR BAR SPACING (IN)	ALLOWABLE PRESSURE (PSF) AS CONTROLLED BY BARS			ALLOWABLE PRESSURE (PSF) AS CONTROLLED BY BAR END CONNECTIONS			
		3" BAR	4" BAR	5" BAR	CONN "A" & "B"	CONN "C"		CONN "D"
					WOOD/BLOCK/CONC	WOOD	BLOCK/CONC	BLOCK/CONC
30	48	80.0	80.0	80.0	80.0	80.0	80.0	80.0
36	42	80.0	80.0	80.0	80.0	80.0	80.0	80.0
	48	80.0	80.0	80.0	70.1	80.0	80.0	80.0
42	36	80.0	80.0	80.0	80.0	80.0	80.0	80.0
	42	80.0	80.0	80.0	68.7	80.0	80.0	80.0
	48	80.0	80.0	80.0	60.1	80.0	80.0	80.0
48	30	80.0	80.0	80.0	80.0	80.0	80.0	80.0
	36	80.0	80.0	80.0	70.1	80.0	80.0	80.0
	42	80.0	80.0	80.0	60.1	80.0	80.0	80.0
	48	80.0	80.0	80.0	52.6	80.0	80.0	80.0
54	24	80.0	80.0	80.0	80.0	80.0	80.0	80.0
	30	80.0	80.0	80.0	74.8	80.0	80.0	80.0
	36	80.0	80.0	80.0	62.3	80.0	80.0	80.0
	42	80.0	80.0	80.0	53.4	80.0	80.0	80.0
	48	80.0	80.0	80.0	46.8	80.0	80.0	80.0
60	24	80.0	80.0	80.0	80.0	80.0	80.0	80.0
	30	80.0	80.0	80.0	67.3	80.0	80.0	80.0
	36	80.0	80.0	80.0	56.1	80.0	80.0	80.0
	42	80.0	80.0	80.0	47.0	80.0	80.0	80.0
	48	80.0	80.0	80.0	42.1	80.0	80.0	80.0
66	24	80.0	80.0	80.0	76.5	80.0	80.0	80.0
	30	80.0	80.0	80.0	61.2	80.0	80.0	80.0
	36	80.0	80.0	80.0	51.0	80.0	80.0	80.0
	42	80.0	80.0	80.0	43.7	80.0	80.0	80.0
	48	78.3	80.0	80.0	38.3	80.0	79.1	80.0
72	24	80.0	80.0	80.0	70.1	80.0	80.0	80.0
	30	80.0	80.0	80.0	56.1	80.0	80.0	80.0
	36	80.0	80.0	80.0	46.8	80.0	80.0	80.0
	42	76.9	80.0	80.0	40.1	80.0	80.0	80.0
	48	67.3	80.0	80.0	35.1	80.0	72.5	80.0
78	24	80.0	80.0	80.0	64.7	80.0	80.0	80.0
	30	80.0	80.0	80.0	51.8	80.0	80.0	80.0
	36	74.1	80.0	80.0	43.2	80.0	80.0	80.0
	42	63.5	80.0	80.0	37.0	80.0	76.5	80.0
	48	55.6	80.0	80.0	32.4	80.0	67.0	80.0
84	24	80.0	80.0	80.0	60.1	80.0	80.0	80.0
	30	68.3	80.0	80.0	48.1	80.0	80.0	80.0
	36	56.9	80.0	80.0	40.1	80.0	80.0	80.0
	42	48.8	80.0	80.0	34.4	80.0	71.1	80.0
	48	42.7	72.0	80.0	30.1	80.0	62.2	80.0
90	24	53.4	80.0	80.0	56.1	80.0	80.0	80.0
	30	42.7	80.0	80.0	44.9	80.0	80.0	80.0
	36	35.6	74.9	80.0	37.4	80.0	77.4	80.0
	42	30.5	64.2	80.0	32.1	80.0	66.3	80.0
	48	26.7	56.2	80.0	28.1	78.4	58.0	80.0

1. ALL PRESSURES ARE FOR BOTH POSITIVE & NEGATIVE AND ARE PSF.
2. REF. SHEET 7 FOR CONNECTION TYPES & DETAILS.

PRESSURE LOAD TABLE FOR STORM BARS & BAR END CONNECTIONS

SHUTTER WIDTH (IN)	HEIGHT OR BAR SPACING (IN)	ALLOWABLE PRESSURE (PSF) AS CONTROLLED BY BARS			ALLOWABLE PRESSURE (PSF) AS CONTROLLED BY BAR END CONNECTIONS			
		3" BAR	4" BAR	5" BAR	CONN "A" & "B"	CONN "C"		CONN "D"
					WOOD/BLOCK/CONC	WOOD	BLOCK/CONC	BLOCK/CONC
96	24	42.3	80.0	80.0	52.6	80.0	80.0	80.0
	30	33.3	71.2	80.0	42.1	80.0	80.0	80.0
	36	28.2	59.4	80.0	35.1	80.0	72.5	80.0
	42	–	50.9	80.0	30.1	80.0	62.2	80.0
	48	–	44.5	78.5	26.3	73.5	54.4	80.0
102	24	–	71.4	80.0	49.5	80.0	80.0	80.0
	30	–	57.1	80.0	39.6	80.0	80.0	80.0
	36	–	47.6	80.0	33.0	80.0	68.3	80.0
	42	–	40.8	72.0	28.3	79.1	58.5	80.0
	48	–	35.7	63.0	–	69.2	51.2	76.8
108	24	–	58.0	80.0	46.8	80.0	80.0	80.0
	30	–	46.4	80.0	37.4	80.0	77.4	80.0
	36	–	38.7	68.2	31.2	80.0	64.5	80.0
	42	–	33.1	58.4	26.7	74.7	55.3	80.0
	48	–	29.0	51.1	–	65.3	48.4	72.5
112	24	–	50.7	80.0	45.1	80.0	80.0	80.0
	30	–	40.6	71.6	36.1	80.0	74.6	80.0
	36	–	33.8	59.7	30.1	80.0	62.2	80.0
	42	–	29.0	51.1	25.8	72.0	53.3	80.0
	48	–	–	44.7	–	63.0	46.6	69.9

LOAD TABLE INSTRUCTIONS:

1. SELECT AN OVERALL SHUTTER SIZE (TOTAL WIDTH & HEIGHT).
2. DETERMINE THE REQUIRED DESIGN WIND PRESSURE FOR THE SHUTTER.
3. IF THE SHUTTER HEIGHT IS LESS THAN OR EQUAL TO 76", GO TO "PRESSURE TABLE FOR SINGLE SPAN SHUTTERS" ON SHEET 9 AND COMPARE THE REQUIRED DESIGN PRESSURE TO THE ALLOWABLE PRESSURES IN THE TABLE. IF ALLOWABLE PRESSURE IS EQUAL TO OR GREATER THAN THAT REQUIRED, NO BAR IS REQUIRED & YOU ARE FINISHED. IF ALLOWABLE PRESSURE IS LESS THAN REQUIRED, STORM BAR(S) ARE NEEDED, SO CONTINUE TO NUMBER 4 BELOW.
4. IF BARS ARE REQUIRED, GO TO LOAD TABLES ON THIS SHEET.
5. GO TO APPLICABLE SHUTTER WIDTH IN TABLE AND CHOOSE THE DESIRED BAR SPACING.
6. GO ACROSS THE TABLE AND CHOOSE THE BAR AND CONNECTION WHO'S ALLOWABLE PRESSURE IS GREATER THAN OR EQUAL TO THE REQUIRED PRESSURE. IF THE DESIRED BAR AND/OR CONNECTION TYPE DOES NOT MEET THE REQUIRED SHUTTER DESIGN PRESSURE, CHOOSE ANOTHER BAR SPACING AND CHECK THE BAR TYPE & CONNECTION AGAIN. REPEAT UNTIL DESIRED & CORRECT BAR & CONNECTION TYPE ARE DETERMINED (NOTE THAT THE LESSER PRESSURE OF THE BAR, CONNECTION TYPE, OR MAXIMUM ALLOWABLE OF +/-80 PSF SHALL CONTROL THE SHUTTER).

PRODUCT REVISED
as complying with the Florida
Buiding Code
Acceptance No. 02-0409.02
Expiration Date Nov. 15 2006
By
Miami Dade Product Control
Division

APPROVED AS COMPLYING WITH THE
SOUTH FLORIDA BUILDING CODE
DATE 11/15/2001
BY
PRODUCT CONTROL DIVISION
BUILDING CODE COMPLIANCE OFFICE
ACCEPTANCE NO. 01-0216.03

DRAWN BY: W.W.S.	CHECKED BY: W.W.S.
PLOT: 1-24	DATE: 12/08/00

NO.	REVISION DESCRIPTION	BY	DATE

DRAWING TITLE: IMPACT BAHAMA SHUTTER (DADE)

MANUFACTURER: FOLDING SHUTTER CORPORATION
7089 HEMSTREET PLACE
WEST PALM BEACH, FLORIDA 33413
561-683-4811

CONSULTANTS: W. W. SCHAEFER ENGINEERING & CONSULTING, P.A.
600 SANDTREE DRIVE; SUITE 203B
PALM BEACH GARDENS, FL 33403
PHONE: 561-775-4902 FAX: 561-775-4903

CERTIFICATION
OCT 22 2001
WARREN W. SCHAEFER, P.E.
P.E. NO. 44135

DRAWING NO. 1018 REV.

SHEET NO. 10 OF 10